JUMO GmbH & Co. KG
Delivery address: Mackenrodtstraße 14, 36039 Fulda, Germany
Postal address: 36035 Fulda, Germany
Phone: +49 661 6003-0
Fax: +49 661 6003-607
e-mail: mail@jumo.net
Internet: www.jumo.net

JUMO Instrument Co. Ltd.
JUMO House
Temple Bank, Riverway
Harlow, Essex CM20 2DY, UK
Phone: +44 1279 635533
Fax: +44 1279 635262
e-mail: sales@jumo.co.uk
Internet: www.jumo.co.uk

JUMO Process Control, Inc.
8 Technology Boulevard
Canastota, NY 13031, USA
Phone: 315-697-JUMO
1-800-554-JUMO
Fax: 315-697-5867
e-mail: info@jumo.us
Internet: www.jumo.us

Order details

	(1)	**Basic type**
705015		Relay module 4-channel
	(2)	**Voltage supply**
36		DC 24 V +25/-20 %
	(3)	**DNV GL approval**
000		Without approval
062		With DNV GL approval[a]

[a] The power supply unit used must also have a DNV GL or GL type approval (e.g. type 705090).

	(1)		(2)		(3)
Order code		/		/	
Order example	705015	/	36	/	000

Scope of delivery

1 relay module
1 Installation Instructions

General accessories

Description	Part no.
JUMO mTRON T system manual, English	00575577
Setup program with program editor JUMO mTRON T (on MiniDVD), incl. USB cable (A-plug to mini-B-plug, 3 m)	00569494
Program editor JUMO mTRON T (on MiniDVD), incl. USB cable (A-plug to mini-B-plug, 3 m)	00622333
PCA3000/PCC JUMO software package	00431884
PC Evaluation Software PCA3000	00431882
Release automatic print for PC Evaluation Software PCA3000	00505548
PCA Communication Software PCC	00431879
Plant Visualization Software JUMO SVS3000: See data sheet 700755	-
USB cable A-plug mini-B-plug 3 m	00506252

Content of the Mini-DVD:
- Setup program with program editor JUMO mTRON T in case of part no. 00569494
- Program editor JUMO mTRON T in case of part no. 00622333
- CODESYS programming software (free version)
- CODESYS Repository Package - Operating panels (free version)
- GSD file JUMO mTRON T - CPU (free version)
- PC Evaluation Software PCA3000 (30-day trial version)
- PCA Communication Software PCC (30-day trial version)
- Documentation in PDF format

JUMO GmbH & Co. KG
Delivery address: Mackenrodtstraße 14, 36039 Fulda, Germany
Postal address: 36035 Fulda, Germany
Phone: +49 661 6003-0
Fax: +49 661 6003-607
e-mail: mail@jumo.net
Internet: www.jumo.net

JUMO Instrument Co. Ltd.
JUMO House
Temple Bank, Riverway
Harlow, Essex CM20 2DY, UK
Phone: +44 1279 635533
Fax: +44 1279 635262
e-mail: sales@jumo.co.uk
Internet: www.jumo.co.uk

JUMO Process Control, Inc.
8 Technology Boulevard
Canastota, NY 13031, USA
Phone: 315-697-JUMO
1-800-554-JUMO
Fax: 315-697-5867
e-mail: info@jumo.us
Internet: www.jumo.us

JUMO mTRON T
Measuring, Control, and Automation System

Analog input module 4-channel

Brief description

The analog input module 4-channel is equipped with four universal analog inputs that are electrically isolated from each other for thermocouples, RTD temperature probes, resistance transmitters, resistance/potentiometers, or standard signals (current or voltage) as well as one digital input (DC 0/24 V). The digitized input values/states are available in the system for further processing.

LEDs are used to indicate applied voltage supply, the module operating status, as well as the logical status of the digital input.

A setup program or the multifunction panel 840 can be used to comfortably configure the analog input module.

For service work, the module insert can be easily pulled out of the case at the front. The case including the bus PCB remains mounted on the DIN rail.

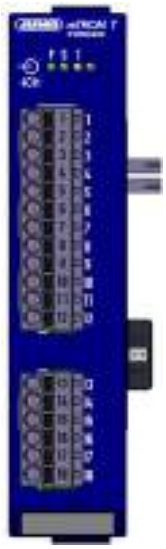

Type 705020/...

Block diagram

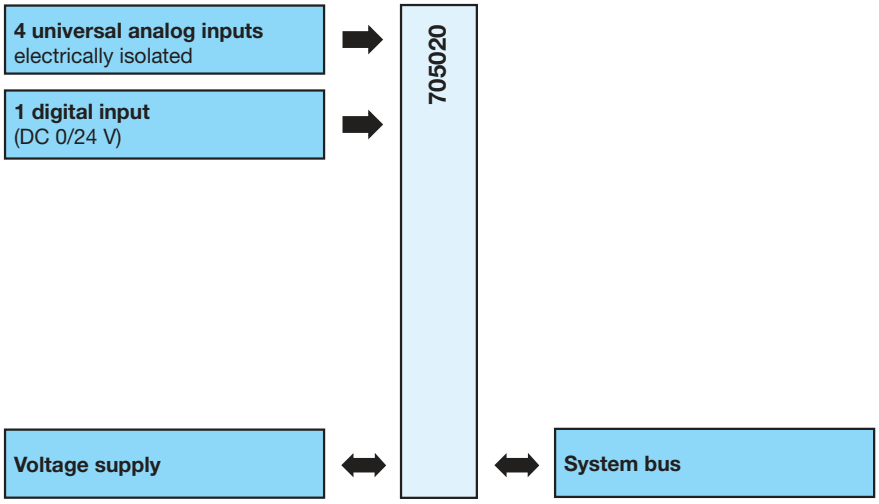

Features

- Four high-quality, universal analog inputs for thermocouples, RTD temperature probes, resistance transmitters, resistance/potentiometers, or standard signals
- All analog inputs are electrically isolated from each other
- Customer-specific linearization (up to 45 pairs of values or polynomial up to the 4th order)
- Limit value monitoring
- One digital input DC 0/24 V
- Automatic configuration after the module insert has been exchanged (hot swappable)
- Connection of the inputs at the front
- Removable terminal strips with Push-In technology
- Quick wiring of operating voltage and system bus due to easy module connection
- AMS2750/CQI-9 (extra code)

Approval/approval marks (see “Technical data”)

JUMO GmbH & Co. KG
Delivery address: Mackenrodtstraße 14, 36039 Fulda, Germany
Postal address: 36035 Fulda, Germany
Phone: +49 661 6003-0
Fax: +49 661 6003-607
e-mail: mail@jumo.net
Internet: www.jumo.net

JUMO Instrument Co. Ltd.
JUMO House
Temple Bank, Riverway
Harlow, Essex CM20 2DY, UK
Phone: +44 1279 635533
Fax: +44 1279 635262
e-mail: sales@jumo.co.uk
Internet: www.jumo.co.uk

JUMO Process Control, Inc.
8 Technology Boulevard
Canastota, NY 13031, USA
Phone: 315-697-JUMO
1-800-554-JUMO
Fax: 315-697-5867
e-mail: info@jumo.us
Internet: www.jumo.us

Description

Limit value monitoring

For each analog input, two separate alarms (min/max alarm) can be activated; each alarm has its own limit value. Alarm type, event text, collective alarm, alarm suppression, and alarm delay are configurable.

Analog inputs

The four analog inputs are universal measuring inputs for RTD temperature probes, thermocouples, resistance transmitters, resistance/potentiometers, and standard signals (current, voltage). Linearizations for over 20 common measuring probes (RTD temperature probes, thermocouples) are saved. A measured value offset or a fine adjustment can be carried out to compensate for plant-specific deviations. Due to the measuring circuit monitoring, a measuring range that is too high or too low, probe/cable break, and probe/cable short circuit are detected – depending on the measuring element type – so that the system is switched to an operational safe status in the event of an error.

Customer-specific linearization

A customer-specific linearization is also possible. The required linearization curve can be entered in the setup program using up to 45 pairs of values or a formula (polynomial up to the 4th order).

Digital input

In addition, a digital input DC 0/24 V is available. The signal status can be used in the system in a flexible manner.

JUMO GmbH & Co. KG
Delivery address: Mackenrodtstraße 14, 36039 Fulda, Germany
Postal address: 36035 Fulda, Germany
Phone: +49 661 6003-0
Fax: +49 661 6003-607
e-mail: mail@jumo.net
Internet: www.jumo.net

JUMO Instrument Co. Ltd.
JUMO House
Temple Bank, Riverway
Harlow, Essex CM20 2DY, UK
Phone: +44 1279 635533
Fax: +44 1279 635262
e-mail: sales@jumo.co.uk
Internet: www.jumo.co.uk

JUMO Process Control, Inc.
8 Technology Boulevard
Canastota, NY 13031, USA
Phone: 315-697-JUMO
1-800-554-JUMO
Fax: 315-697-5867
e-mail: info@jumo.us
Internet: www.jumo.us

Technical data

Analog inputs

General information

Number	4
A/D converter	Dynamic resolution up to 16 bit

Thermocouples

Designation	Standard	Measuring range	Measuring accuracy[a]	Ambient temperature influence
Fe-CuNi “L”		-200 to +900 °C	≤ 0.1 % from -100 °C	300 ppm/K
Fe-CuNi “J”	DIN EN 60584	-200 to +1200°C	≤ 0.1 % from -100 °C	300 ppm/K
Cu-CuNi “U”		-200 to +600 °C	≤ 0.1 % from -130 °C	300 ppm/K
Cu-CuNi “T”	DIN EN 60584	-200 to +400 °C	≤ 0.1 % from -150 °C	300 ppm/K
NiCr-Ni “K”	DIN EN 60584	-200 to +1372 °C	≤ 0.1 % from -80 °C	300 ppm/K
NiCr-CuNi „E“	DIN EN 60584	-200 to +1000 °C	≤ 0.1 % from -80 °C	300 ppm/K
NiCrSi-NiSi “N”	DIN EN 60584	-100 to +1300 °C	≤ 0.1 % from -80 °C	300 ppm/K
Pt10Rh-Pt “S”	DIN EN 60584	-50 to 1768 °C	≤ 0.15 % from 20 °C	300 ppm/K
Pt13Rh-Pt “R”	DIN EN 60584	-50 to 1768 °C	≤ 0.15 % from 20 °C	300 ppm/K
Pt30Rh-Pt6Rh “B”	DIN EN 60584	0 to 1820 °C	≤ 0.15 % from 400 °C	300 ppm/K
W5Re-W26Re „C“		0 to 2320 °C	≤ 0.15 % from 500 °C	300 ppm/K
W3Re-W25Re “D”		0 to 2495 °C	≤ 0.15 % from 500 °C	300 ppm/K
W3Re-W26Re		0 to 2400 °C	≤ 0.15 % from 500 °C	300 ppm/K
Chromel-Copel	GOST 8.585-2001	-200 to +800 °C	≤ 0.15 % from -80 °C	300 ppm/K
Chromel-Alumel	GOST 8.585-2001	-200 to +1372 °C	≤ 0.10 % from -80 °C	300 ppm/K
PLII (Platinel II)		0 to 1395 °C	≤ 0.10 % from -80 °C	300 ppm/K
Linear		0 to 75 mV	≤ 0.1 %	300 ppm/K
Cold junction		Pt100 internal		
Cold junction accuracy		± 1 K		

[a] The accuracy values refer to the maximum measuring range. Smaller measuring ranges lead to reduced linearization accuracy.

RTD temperature probe

Designation	Standard	Measuring range	Measuring accuracy[a]	Ambient temperature influence
Pt100	DIN EN 60751	-200 to +850 °C		50 ppm/K
2-wire circuit			≤ 0.15 %	
3-wire/4-wire circuit			≤ 0.05 %	
Pt500	DIN EN 60751	-200 to +850 °C		50 ppm/K
2-wire circuit			≤ 0.30 %	
3-wire/4-wire circuit			≤ 0.15 %	
Pt1000	DIN EN 60751	-200 to +850 °C		50 ppm/K
2-wire circuit			≤ 0.20 %	
3-wire/4-wire circuit			≤ 0.08 %	
Ni 100	DIN 43760	-60 to +250 °C		50 ppm/K
2-wire circuit			≤ 0.36 %	
3-wire/4-wire circuit			≤ 0.24 %	
Pt100	JIS 1604	-200 to +650 °C		50 ppm/K
2-wire circuit			≤ 0.20 %	
3-wire/4-wire circuit			≤ 0.06 %	

JUMO GmbH & Co. KG
Delivery address: Mackenrodtstraße 14, 36039 Fulda, Germany
Postal address: 36035 Fulda, Germany
Phone: +49 661 6003-0
Fax: +49 661 6003-607
e-mail: mail@jumo.net
Internet: www.jumo.net

JUMO Instrument Co. Ltd.
JUMO House
Temple Bank, Riverway
Harlow, Essex CM20 2DY, UK
Phone: +44 1279 635533
Fax: +44 1279 635262
e-mail: sales@jumo.co.uk
Internet: www.jumo.co.uk

JUMO Process Control, Inc.
8 Technology Boulevard
Canastota, NY 13031, USA
Phone: 315-697-JUMO
1-800-554-JUMO
Fax: 315-697-5867
e-mail: info@jumo.us
Internet: www.jumo.us

Designation	Standard	Measuring range	Measuring accuracy[a]	Ambient temperature influence
Pt50	GOST 6651-94	-200 to +1100 °C		50 ppm/K
2-wire circuit			≤ 0.30 %	
3-wire/4-wire circuit			≤ 0.06 %	
Pt100	GOST 6651-94	-200 to +850 °C		50 ppm/K
2-wire circuit			≤ 0.15 %	
3-wire/4-wire circuit			≤ 0.05 %	
Cu50	GOST 6651-94	-50 to +200 °C		200 ppm/K
2-wire circuit			≤ 0.80 %	
3-wire/4-wire circuit			≤ 0.60 %	
Cu100	GOST 6651-94	-50 to +200 °C		200 ppm/K
2-wire circuit			≤ 0.80 %	
3-wire/4-wire circuit			≤ 0.50 %	
KTY11-6		-50 to +150 °C		50 ppm/K
2-wire circuit			≤ 1 %	
3-wire/4-wire circuit			≤ 0.24 %	
Sensor lead resistance		Max. 30 Ω per lead with a 3-wire and 4-wire circuit Max. 10 Ω per lead with a 2-wire circuit		
Measuring current		Pt100 approx. 250 µA, Pt500, and Pt1000 approx. 100 µA; not constant		
Lead compensation		Not required for 3-wire and 4-wire circuit. For a 2-wire circuit, the lead resistance can be compensated in the software by correcting the process value.		

[a] The accuracy values refer to the maximum measuring range. Smaller measuring ranges lead to reduced linearization accuracy.

Standard signals

Designation	Measuring range	Measuring accuracy[a]	Ambient temperature influence
Voltage		≤ 0.05 %	100 ppm/K
Input resistance R_E > 500 kΩ	DC 0(2) to 10 V		
Input resistance R_E > 100 kΩ	DC 0 to 1 V		
Current (voltage drop ≤ 2 V)	DC 0(4) to 20 mA	≤ 0.05 %	100 ppm/K
Resistance transmitter	min. 100 Ω, max. 4 kΩ	± 4 Ω	100 ppm/K
Resistance/potentiometer	< 400 Ω 400 Ω to 4 kΩ	± 0.4 Ω ± 4 Ω	50 ppm/K 50 ppm/K

[a] The accuracy values refer to the maximum measuring range. Smaller measuring ranges lead to reduced linearization accuracy.

Measuring circuit monitoring

In the event of an error the digitized output values move to a defined status.

Measuring element	Out of range	Probe/cable short circuit	Probe/cable break
Thermocouple	Is detected	Is not detected	Is detected
RTD temperature probe	Is detected	Is detected	Is detected
Voltage			
2 to 10 V	Is detected	Is detected	Is detected
0 to 10 V	Is detected	Is not detected	Is not detected
0 to 1 V	Is detected	Is not detected	Is not detected
Current			
4 to 20 mA	Is detected	Is detected	Is detected
0 to 20 mA	Is detected	Is not detected	Is not detected
Resistance transmitter	Is detected	Is not detected	Is detected
Resistance/potentiometer	Is detected	Is detected	Is detected

JUMO GmbH & Co. KG
Delivery address: Mackenrodtstraße 14, 36039 Fulda, Germany
Postal address: 36035 Fulda, Germany
Phone: +49 661 6003-0
Fax: +49 661 6003-607
e-mail: mail@jumo.net
Internet: www.jumo.net

JUMO Instrument Co. Ltd.
JUMO House
Temple Bank, Riverway
Harlow, Essex CM20 2DY, UK
Phone: +44 1279 635533
Fax: +44 1279 635262
e-mail: sales@jumo.co.uk
Internet: www.jumo.co.uk

JUMO Process Control, Inc.
8 Technology Boulevard
Canastota, NY 13031, USA
Phone: 315-697-JUMO
1-800-554-JUMO
Fax: 315-697-5867
e-mail: info@jumo.us
Internet: www.jumo.us

Digital input

Number	1
Input signal	DC 0/24 V (PLC level; logical “0” = -3 to +5 V; logical “1” = +15 to +30 V)

Electrical data

Voltage supply	
Connection	Lateral (feed via base unit or router module)
Voltage	DC 24 V +25/-20 %
Residual ripple	5 %
Current consumption	130 mA (at DC 19.2 V)
Power consumption	3 W
Inputs (terminals 1 to 18)	
Connection	At the front (removable terminal strips with Push-In technology)
Conductor cross section on terminals 1 to 18	
Wire or strand without ferrule	Min. 0.14 mm^2, max. 1.5 mm^2
Strand with ferrule	Without plastic collar: Min. 0.25 mm^2, max. 1.5 mm^2 With plastic collar: Min. 0.25 mm^2, max. 0.5 mm^2
Stripping length on terminals 1 to 18	9 mm
Electrical safety	Acc. to DIN EN 61010-1 Overvoltage category III, pollution degree 2
Electromagnetic compatibility	Acc. to DIN EN 61326-1
Interference emission	Class A – only for industrial use –
Interference immunity	Industrial requirements

Case and ambient conditions

Case type	Plastic case for DIN rail mounting in the control cabinet (indoor use); DIN rail acc. to DIN EN 60715, 35 mm x 7.5 mm x 1 mm
Dimensions (W × H × D)	22.5 m × 103.6 m × 101.5 m (without connection elements)
Weight	Approx. 140 g
Protection rating	IP 20, acc. to DIN EN 60529
Ambient temperature range	-20 to +55 °C
Storage temperature range	-40 to +70 °C
Resistance to climatic conditions	Relative humidity ≤ 90 % annual average without condensation (climatic class 3K3 acc. to DIN EN 60721-3-3 with extended temperature and humidity range)
Site altitude	Up to 2000 m above sea level
Mechanical ambient conditions[a]	Classification acc. to DIN EN 60721-3-3, table 6, class 3M2

[a] Test conditions are listed in the System Descripton B 705000.8.

Approval/approval marks

Approval mark	Testing agency	Certificate/certification number	Inspection basis	Valid for
c UL us	Underwriters Laboratories	E201387	UL 61010-1 (3. Ed.), CAN/CSA-22.2 No. 61010-1 (3. Ed.)	all types
DNV GL	DNV GL	TAA000016N	Class Guideline DNVGL-CG-0339	all types; a power supply unit with DNV GL or GL type approval is required (e.g. type 705090)

JUMO GmbH & Co. KG
Delivery address: Mackenrodtstraße 14, 36039 Fulda, Germany
Postal address: 36035 Fulda, Germany
Phone: +49 661 6003-0
Fax: +49 661 6003-607
e-mail: mail@jumo.net
Internet: www.jumo.net

JUMO Instrument Co. Ltd.
JUMO House
Temple Bank, Riverway
Harlow, Essex CM20 2DY, UK
Phone: +44 1279 635533
Fax: +44 1279 635262
e-mail: sales@jumo.co.uk
Internet: www.jumo.co.uk

JUMO Process Control, Inc.
8 Technology Boulevard
Canastota, NY 13031, USA
Phone: 315-697-JUMO
1-800-554-JUMO
Fax: 315-697-5867
e-mail: info@jumo.us
Internet: www.jumo.us

Display and connection elements

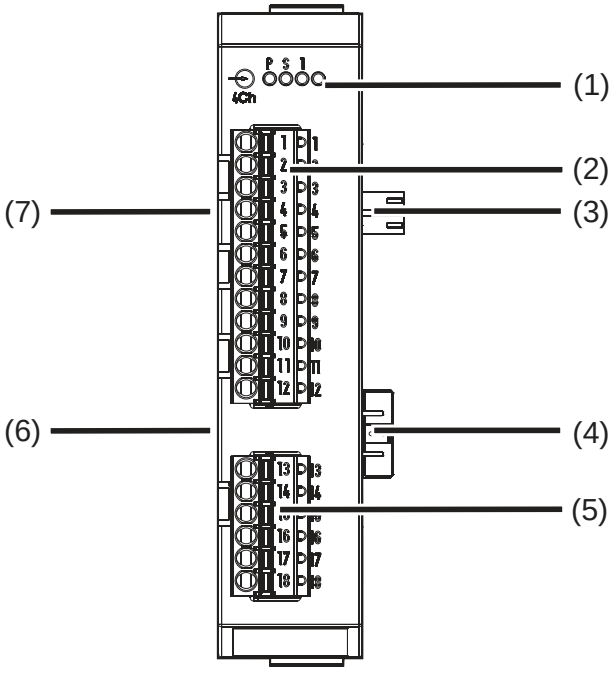

(1) Status displays (LED)
P = Voltage supply
S = Status
1 = Digital input
(LED is lit: Active)

(2) Analog input 1 to 3

(3) Voltage supply Out, DC 24 V

(4) Side system bus Out

(5) Analog input 4;
digital input

(6) Side system bus In

(7) Voltage supply In, DC 24 V

Electrical isolation

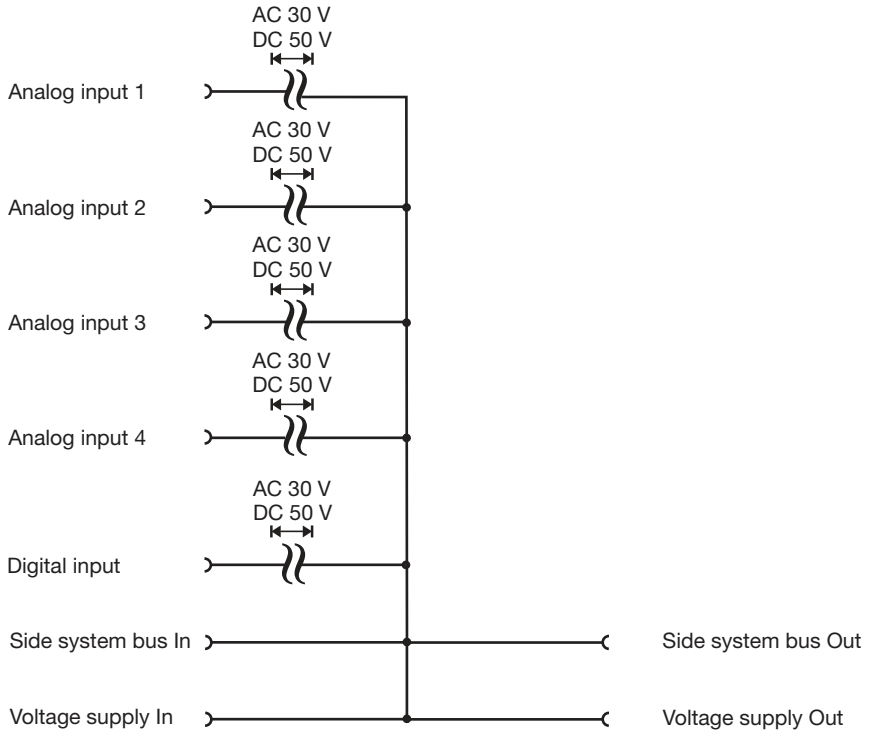

JUMO GmbH & Co. KG
Delivery address: Mackenrodtstraße 14, 36039 Fulda, Germany
Postal address: 36035 Fulda, Germany
Phone: +49 661 6003-0
Fax: +49 661 6003-607
e-mail: mail@jumo.net
Internet: www.jumo.net

JUMO Instrument Co. Ltd.
JUMO House
Temple Bank, Riverway
Harlow, Essex CM20 2DY, UK
Phone: +44 1279 635533
Fax: +44 1279 635262
e-mail: sales@jumo.co.uk
Internet: www.jumo.co.uk

JUMO Process Control, Inc.
8 Technology Boulevard
Canastota, NY 13031, USA
Phone: 315-697-JUMO
1-800-554-JUMO
Fax: 315-697-5867
e-mail: info@jumo.us
Internet: www.jumo.us

Connection diagram

The connection diagram included in the data sheet provides initial information about the connection options. Only use the installation instructions or the operating manual for the electrical connection. The know-how and the correct technical implementation of the safety warnings/instructions contained in these documents are the prerequisite for the installation, electrical connection, and initial start as well as for the safety during operation.

Analog inputs

Connection	Input	Terminals	Symbol and terminal designation
Thermocouple	1 2 3 4	2 and 3 6 and 7 10 and 11 14 and 15	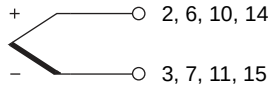
RTD temperature probe 2-wire circuit	1 2 3 4	2 and 4 6 and 8 10 and 12 14 and 16	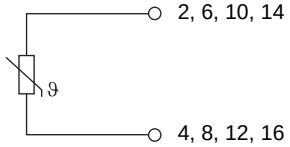
RTD temperature probe 3-wire circuit	1 2 3 4	2 to 4 6 to 8 10 to 12 14 to 16	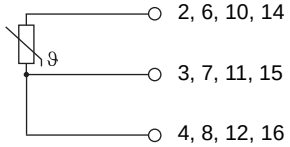
RTD temperature probe 4-wire circuit	1 2 3 4	1 to 4 5 to 8 9 to 12 13 to 16	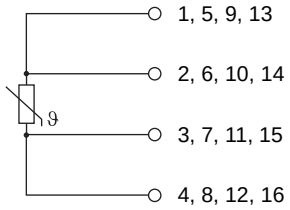
Voltage DC 0(2) to 10 V	1 2 3 4	1 and 2 5 and 6 9 and 10 13 and 14	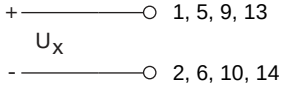
Voltage DC 0 to 1 V	1 2 3 4	2 and 3 6 and 7 10 and 11 14 and 15	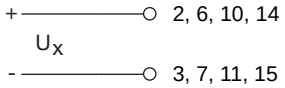
Current DC 0(4) to 20 mA	1 2 3 4	3 and 4 7 and 8 11 and 12 15 and 16	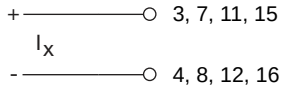
Resistance transmitter A = Start E = End S = Slider	1 2 3 4	2 to 4 6 to 8 10 to 12 14 to 16	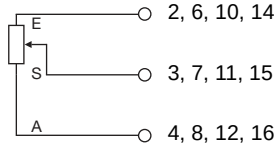
Resistance/potentiometer 2-wire circuit	1 2 3 4	2 and 4 6 and 8 10 and 12 14 and 16	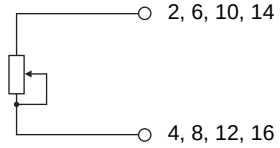
Resistance/potentiometer 3-wire circuit	1 2 3 4	2 to 4 6 to 8 10 to 12 14 to 16	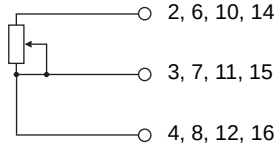

JUMO GmbH & Co. KG
Delivery address: Mackenrodtstraße 14, 36039 Fulda, Germany
Postal address: 36035 Fulda, Germany
Phone: +49 661 6003-0
Fax: +49 661 6003-607
e-mail: mail@jumo.net
Internet: www.jumo.net

JUMO Instrument Co. Ltd.
JUMO House
Temple Bank, Riverway
Harlow, Essex CM20 2DY, UK
Phone: +44 1279 635533
Fax: +44 1279 635262
e-mail: sales@jumo.co.uk
Internet: www.jumo.co.uk

JUMO Process Control, Inc.
8 Technology Boulevard
Canastota, NY 13031, USA
Phone: 315-697-JUMO
1-800-554-JUMO
Fax: 315-697-5867
e-mail: info@jumo.us
Internet: www.jumo.us

Connection	Input	Terminals	Symbol and terminal designation
Resistance/potentiometer 4-wire circuit	1 2 3 4	1 to 4 5 to 8 9 to 12 13 to 16	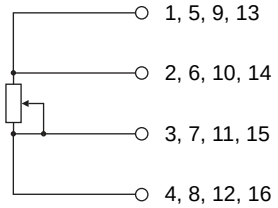

Digital input

Connection	Input	Terminals	Symbol and terminal designation
Digital input DC 0/24 V	1	17 and 18	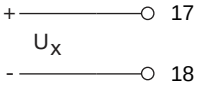

JUMO GmbH & Co. KG
Delivery address: Mackenrodtstraße 14, 36039 Fulda, Germany
Postal address: 36035 Fulda, Germany
Phone: +49 661 6003-0
Fax: +49 661 6003-607
e-mail: mail@jumo.net
Internet: www.jumo.net

JUMO Instrument Co. Ltd.
JUMO House
Temple Bank, Riverway
Harlow, Essex CM20 2DY, UK
Phone: +44 1279 635533
Fax: +44 1279 635262
e-mail: sales@jumo.co.uk
Internet: www.jumo.co.uk

JUMO Process Control, Inc.
8 Technology Boulevard
Canastota, NY 13031, USA
Phone: 315-697-JUMO
1-800-554-JUMO
Fax: 315-697-5867
e-mail: info@jumo.us
Internet: www.jumo.us

Dimensions

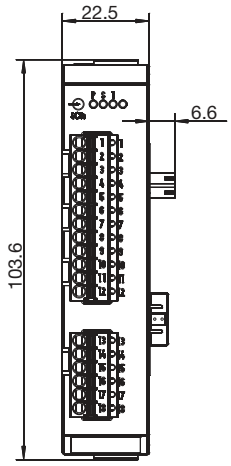

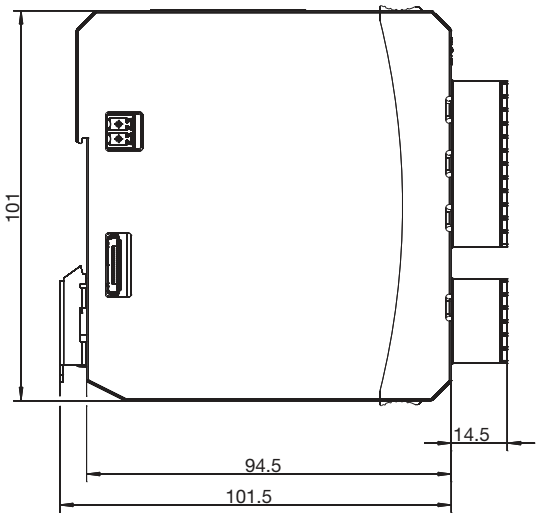

Module overview

Base units

- Central processing unit
  Data sheet 705001

Input/output modules

- Multichannel controller module
  Data sheet 705010
- Relay module 4-channel
  Data sheet 705015
- Analog input module 4-channel
  Data sheet 705020
- Analog input module 8-channel
  Data sheet 705021
- Analog output module 4-channel
  Data sheet 705025
- Digital input/output module 12-channel
  Data sheet 705030
- Thyristor power controller type 70906x
  Data sheet 709061, 709062, 709063

Special modules

- Router module
  Data sheet 705040

Operating, visualization, recording

- Multifunction panel 840
  Data sheet 705060
- Operating panels
  Data sheet 705065

Power supply units

- 705090/05-33
  Data sheet 705090
- 705090/10-33
  Data sheet 705090

JUMO GmbH & Co. KG
Delivery address: Mackenrodtstraße 14, 36039 Fulda, Germany
Postal address: 36035 Fulda, Germany
Phone: +49 661 6003-0
Fax: +49 661 6003-607
e-mail: mail@jumo.net
Internet: www.jumo.net

JUMO Instrument Co. Ltd.
JUMO House
Temple Bank, Riverway
Harlow, Essex CM20 2DY, UK
Phone: +44 1279 635533
Fax: +44 1279 635262
e-mail: sales@jumo.co.uk
Internet: www.jumo.co.uk

JUMO Process Control, Inc.
8 Technology Boulevard
Canastota, NY 13031, USA
Phone: 315-697-JUMO
1-800-554-JUMO
Fax: 315-697-5867
e-mail: info@jumo.us
Internet: www.jumo.us

Order details

	(1)	**Basic type**
705020		Analog input module 4-channel
	(2)	**Voltage supply**
36		DC 24 V +25/-20 %
	(3)	**DNV GL approval**
000		Without approval
062		With DNV GL approval[a]
	(4)	**Extra codes**
000		Without extra code
879		AMS2750/CQI-9[b]

[a] The power supply unit used must also have a DNV GL or GL type approval (e.g. type 705090).
[b] For the calibration certificate the channels to be checked are to be defined with the thermocouple type and the desired measuring points.

	(1)		(2)		(3)		(4)
Order code		/		/		,	
Order example	705020	/	36	/	000		000

Scope of delivery

1 analog input module, 4-channel
1 Installation Instructions

General accessories

Description	Part no.
JUMO mTRON T system manual, English	00575577
Setup program with program editor JUMO mTRON T (on MiniDVD), incl. USB cable (A-plug to mini-B-plug, 3 m)	00569494
Program editor JUMO mTRON T (on MiniDVD), incl. USB cable (A-plug to mini-B-plug, 3 m)	00622333
PCA3000/PCC JUMO software package	00431884
PC Evaluation Software PCA3000	00431882
Release automatic print for PC Evaluation Software PCA3000	00505548
PCA Communication Software PCC	00431879
Plant Visualization Software JUMO SVS3000: See data sheet 700755	-
USB cable A-plug mini-B-plug 3 m	00506252

Content of the Mini-DVD:
- Setup program with program editor JUMO mTRON T in case of part no. 00569494
- Program editor JUMO mTRON T in case of part no. 00622333
- CODESYS programming software (free version)
- CODESYS Repository Package - Operating panels (free version)
- GSD file JUMO mTRON T - CPU (free version)
- PC Evaluation Software PCA3000 (30-day trial version)
- PCA Communication Software PCC (30-day trial version)
- Documentation in PDF format

JUMO GmbH & Co. KG
Delivery address: Mackenrodtstraße 14, 36039 Fulda, Germany
Postal address: 36035 Fulda, Germany
Phone: +49 661 6003-0
Fax: +49 661 6003-607
e-mail: mail@jumo.net
Internet: www.jumo.net

JUMO Instrument Co. Ltd.
JUMO House
Temple Bank, Riverway
Harlow, Essex CM20 2DY, UK
Phone: +44 1279 635533
Fax: +44 1279 635262
e-mail: sales@jumo.co.uk
Internet: www.jumo.co.uk

JUMO Process Control, Inc.
8 Technology Boulevard
Canastota, NY 13031, USA
Phone: 315-697-JUMO
1-800-554-JUMO
Fax: 315-697-5867
e-mail: info@jumo.us
Internet: www.jumo.us

JUMO mTRON T
Measuring, Control, and Automation System

Analog input module 8-channel

Brief description

The analog input module 8-channel is equipped with eight analog inputs for RTD temperature probes in 2-wire circuit as well as one digital input (DC 0/24 V). The analog inputs are not electrically isolated from each other. The digitized input values/states are available in the system for further processing.

LEDs are used to indicate applied voltage supply, the module operating status, as well as the digital input status.

A setup program or the multifunction panel 840 can be used to comfortably configure the analog input module.

For service work, the module insert can be easily pulled out of the case at the front. The case including the bus PCB remains mounted on the DIN rail.

Type 705021/...

Block diagram

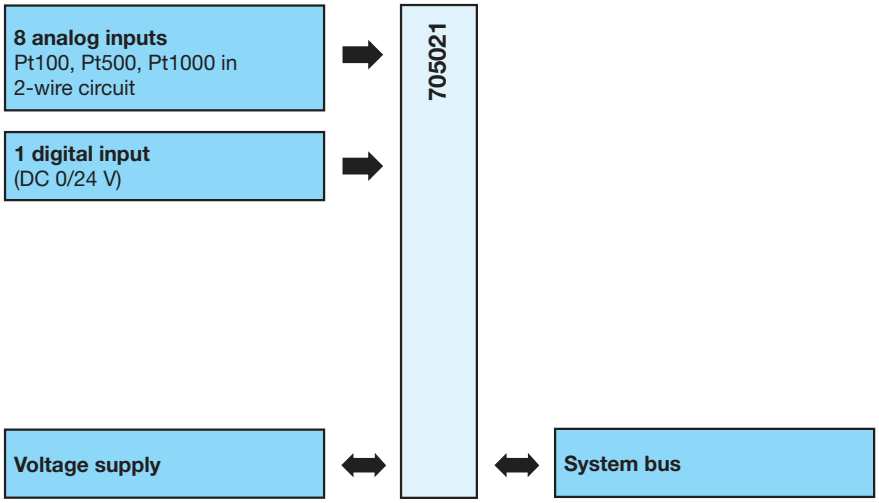

Features

- Eight analog inputs for RTD temperature probe in 2-wire circuit
- Limit value monitoring
- One digital input DC 0/24 V
- Automatic configuration after the module insert has been exchanged (hot swappable)
- Connection of the inputs at the front
- Removable terminal strips with Push-In technology
- Quick wiring of operating voltage and system bus due to easy module connection

Approval/approval marks (see “Technical data”)

JUMO GmbH & Co. KG
Delivery address: Mackenrodtstraße 14, 36039 Fulda, Germany
Postal address: 36035 Fulda, Germany
Phone: +49 661 6003-0
Fax: +49 661 6003-607
e-mail: mail@jumo.net
Internet: www.jumo.net

JUMO Instrument Co. Ltd.
JUMO House
Temple Bank, Riverway
Harlow, Essex CM20 2DY, UK
Phone: +44 1279 635533
Fax: +44 1279 635262
e-mail: sales@jumo.co.uk
Internet: www.jumo.co.uk

JUMO Process Control, Inc.
8 Technology Boulevard
Canastota, NY 13031, USA
Phone: 315-697-JUMO
1-800-554-JUMO
Fax: 315-697-5867
e-mail: info@jumo.us
Internet: www.jumo.us

Description

Limit value monitoring

For each analog input, two separate alarms (min/max alarm) can be activated; each alarm has its own limit value. Alarm type, event text, collective alarm, alarm suppression, and alarm delay are configurable.

Analog inputs

The eight analog inputs are measuring inputs for RTD temperature probes in 2-wire circuit. Linearizations for Pt100, Pt500, and Pt1000 are saved. A measured value offset or a fine adjustment can be carried out to compensate for plant-specific deviations. Due to the measuring circuit monitoring, a measuring range that is too high or too low, probe/cable break, and probe/cable short circuit are detected so that the system is switched to an operational safe status in the event of an error.

Digital input

In addition, a digital input DC 0/24 V is available. The signal status can be used in the system in a flexible manner.

JUMO GmbH & Co. KG
Delivery address: Mackenrodtstraße 14, 36039 Fulda, Germany
Postal address: 36035 Fulda, Germany
Phone: +49 661 6003-0
Fax: +49 661 6003-607
e-mail: mail@jumo.net
Internet: www.jumo.net

JUMO Instrument Co. Ltd.
JUMO House
Temple Bank, Riverway
Harlow, Essex CM20 2DY, UK
Phone: +44 1279 635533
Fax: +44 1279 635262
e-mail: sales@jumo.co.uk
Internet: www.jumo.co.uk

JUMO Process Control, Inc.
8 Technology Boulevard
Canastota, NY 13031, USA
Phone: 315-697-JUMO
1-800-554-JUMO
Fax: 315-697-5867
e-mail: info@jumo.us
Internet: www.jumo.us

Technical data

Analog inputs

General information

Number	8
A/D converter	Resolution 16 bit

RTD temperature probe

Designation	Standard	Measuring range	Measuring accuracy[a]	Ambient temperature influence
Pt100 2-wire circuit	DIN EN 60751	-200 to +850 °C	≤ 0.08 %	50 ppm/K
Pt500 2-wire circuit	DIN EN 60751	-200 to +850 °C	≤ 0.08 %	50 ppm/K
Pt1000 2-wire circuit	DIN EN 60751	-200 to +850 °C	≤ 0.08 %	50 ppm/K
Pt100 2-wire circuit	JIS 1604	-200 to +650 °C	≤ 0.08 %	50 ppm/K
Pt100 2-wire circuit	GOST 6651-94	-200 to +850 °C	≤ 0.08 %	50 ppm/K
Measuring current		Pt100 approx. 380 µA, Pt 500, and Pt1000 approx. 150 µA; not constant		
Lead compensation		A lead resistance can be compensated in the software by correcting the process value.		

[a] The accuracy values refer to the maximum measuring range. Smaller measuring ranges lead to reduced linearization accuracy.

Measuring circuit monitoring

In the event of an error the digitized output values move to a defined status.

Measuring element	Out of range	Probe/cable short circuit	Probe/cable break
RTD temperature probe	Is detected	Is detected	Is detected

Digital input

Number	1
Input signal	DC 0/24 V (PLC level; logical “0” = -3 to +5 V; logical “1” = +15 to +30 V)

JUMO GmbH & Co. KG
Delivery address: Mackenrodtstraße 14, 36039 Fulda, Germany
Postal address: 36035 Fulda, Germany
Phone: +49 661 6003-0
Fax: +49 661 6003-607
e-mail: mail@jumo.net
Internet: www.jumo.net

JUMO Instrument Co. Ltd.
JUMO House
Temple Bank, Riverway
Harlow, Essex CM20 2DY, UK
Phone: +44 1279 635533
Fax: +44 1279 635262
e-mail: sales@jumo.co.uk
Internet: www.jumo.co.uk

JUMO Process Control, Inc.
8 Technology Boulevard
Canastota, NY 13031, USA
Phone: 315-697-JUMO
1-800-554-JUMO
Fax: 315-697-5867
e-mail: info@jumo.us
Internet: www.jumo.us

Electrical data

Voltage supply	
Connection	Lateral (feed via base unit or router module)
Voltage	DC 24 V +25/-20 %
Residual ripple	5 %
Current consumption	80 mA (at DC 19.2 V)
Power consumption	2 W
Inputs (terminals 1 to 18)	
Connection	At the front (removable terminal strips with Push-In technology)
Conductor cross section on terminals 1 to 18	
Wire or strand without ferrule	Min. 0.14 mm^2, max. 1.5 mm^2
Strand with ferrule	Without plastic collar: Min. 0.25 mm^2, max. 1.5 mm^2 With plastic collar: Min. 0.25 mm^2, max. 0.5 mm^2
Stripping length on terminals 1 to 18	9 mm
Electrical safety	Acc. to DIN EN 61010-1 Overvoltage category III, pollution degree 2
Electromagnetic compatibility	Acc. to DIN EN 61326-1
Interference emission	Class A – only for industrial use –
Interference immunity	Industrial requirements

Case and ambient conditions

Case type	Plastic case for DIN rail mounting in the control cabinet (indoor use); DIN rail acc. to DIN EN 60715, 35 mm x 7.5 mm x 1 mm
Dimensions (W x H x D)	22.5 mm x 103.6 mm x 101.5 mm (without connection elements)
Weight	Approx. 125 g
Protection type	IP20, acc. to DIN EN 60529
Ambient temperature range	-20 to +55 °C
Storage temperature range	-40 to +70 °C
Resistance to climatic conditions	Relative humidity ≤ 90 % annual average without condensation (climatic class 3K3 acc. to DIN EN 60721-3-3 with extended temperature and humidity range)
Site altitude	Up to 2000 m above sea level
Mechanical ambient conditions[a]	Classification acc. to DIN EN 60721-3-3, table 6, class 3M2

[a] Test conditions are listed in the System Descripton B 705000.8.

Approval/approval marks

Approval mark	Testing agency	Certificate/certification number	Inspection basis	Valid for
c UL us	Underwriters Laboratories	E201387	UL 61010-1 (3. Ed.), CAN/CSA-22.2 No. 61010-1 (3. Ed.)	all types
DNV GL	DNV GL	TAA000016N	Class Guideline DNVGL-CG-0339	all types; a power supply unit with DNV GL or GL type approval is required (e.g. type 705090)

JUMO GmbH & Co. KG
Delivery address: Mackenrodtstraße 14, 36039 Fulda, Germany
Postal address: 36035 Fulda, Germany
Phone: +49 661 6003-0
Fax: +49 661 6003-607
e-mail: mail@jumo.net
Internet: www.jumo.net

JUMO Instrument Co. Ltd.
JUMO House
Temple Bank, Riverway
Harlow, Essex CM20 2DY, UK
Phone: +44 1279 635533
Fax: +44 1279 635262
e-mail: sales@jumo.co.uk
Internet: www.jumo.co.uk

JUMO Process Control, Inc.
8 Technology Boulevard
Canastota, NY 13031, USA
Phone: 315-697-JUMO
1-800-554-JUMO
Fax: 315-697-5867
e-mail: info@jumo.us
Internet: www.jumo.us

Display and connection elements

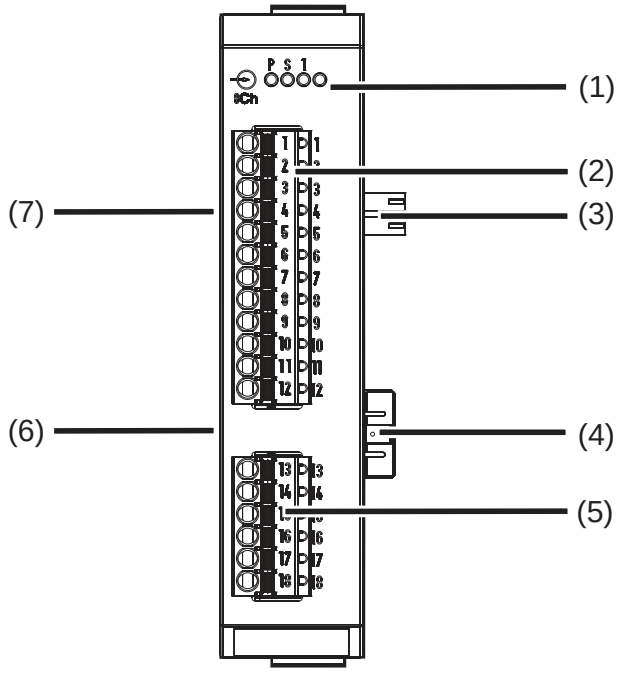

(1) Status displays (LED)
P = Voltage supply
S = Status
1 = Digital input
(LED is lit: Active)
(2) Analog input 1 to 6
(3) Voltage supply Out, DC 24 V
(4) Side system bus Out
(5) Analog input 7, 8; digital input
(6) Side system bus In
(7) Voltage supply In, DC 24 V

Electrical isolation

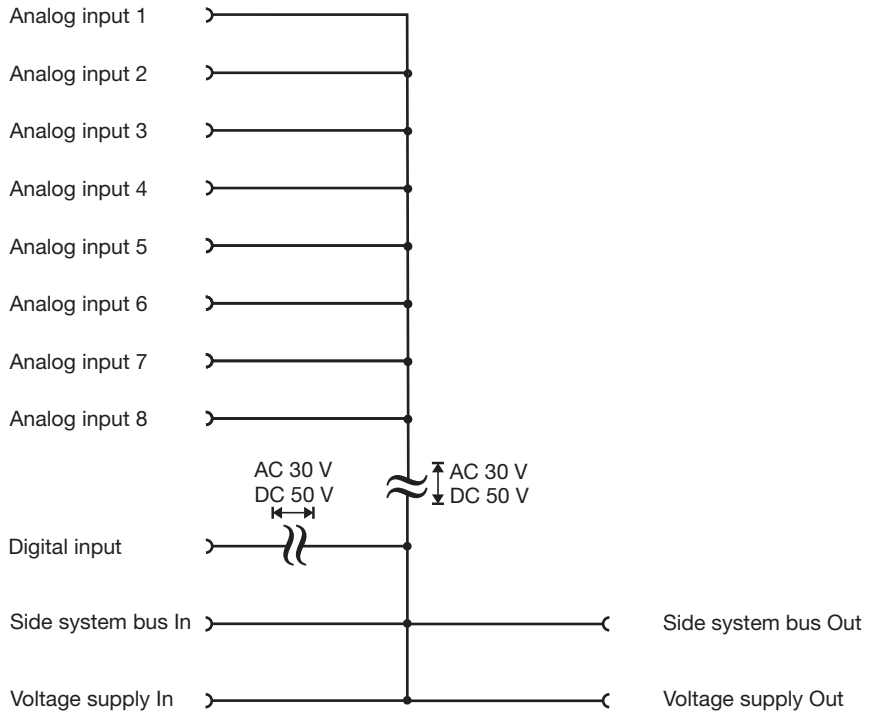

JUMO GmbH & Co. KG
Delivery address: Mackenrodtstraße 14, 36039 Fulda, Germany
Postal address: 36035 Fulda, Germany
Phone: +49 661 6003-0
Fax: +49 661 6003-607
e-mail: mail@jumo.net
Internet: www.jumo.net

JUMO Instrument Co. Ltd.
JUMO House
Temple Bank, Riverway
Harlow, Essex CM20 2DY, UK
Phone: +44 1279 635533
Fax: +44 1279 635262
e-mail: sales@jumo.co.uk
Internet: www.jumo.co.uk

JUMO Process Control, Inc.
8 Technology Boulevard
Canastota, NY 13031, USA
Phone: 315-697-JUMO
1-800-554-JUMO
Fax: 315-697-5867
e-mail: info@jumo.us
Internet: www.jumo.us

Connection diagram

The connection diagram included in the data sheet provides initial information about the connection options. Only use the installation instructions or the operating manual for the electrical connection. The know-how and the correct technical implementation of the safety warnings/instructions contained in these documents are the prerequisite for the installation, electrical connection, and initial start as well as for the safety during operation.

Analog inputs

Connection	Input	Terminals	Symbol and terminal designation
RTD temperature probe 2-wire circuit	1 2 3 4 5 6 7 8	1 and 2 3 and 4 5 and 6 7 and 8 9 and 10 11 and 12 13 and 14 15 and 16	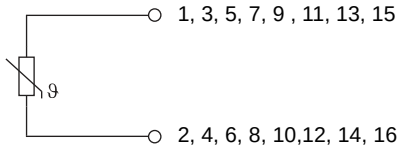

Digital input

Connection	Input	Terminals	Symbol and terminal designation
Digital input DC 0/24 V	1	17 and 18	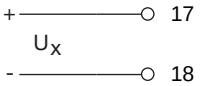

JUMO GmbH & Co. KG
Delivery address: Mackenrodtstraße 14, 36039 Fulda, Germany
Postal address: 36035 Fulda, Germany
Phone: +49 661 6003-0
Fax: +49 661 6003-607
e-mail: mail@jumo.net
Internet: www.jumo.net

JUMO Instrument Co. Ltd.
JUMO House
Temple Bank, Riverway
Harlow, Essex CM20 2DY, UK
Phone: +44 1279 635533
Fax: +44 1279 635262
e-mail: sales@jumo.co.uk
Internet: www.jumo.co.uk

JUMO Process Control, Inc.
8 Technology Boulevard
Canastota, NY 13031, USA
Phone: 315-697-JUMO
1-800-554-JUMO
Fax: 315-697-5867
e-mail: info@jumo.us
Internet: www.jumo.us

Dimensions

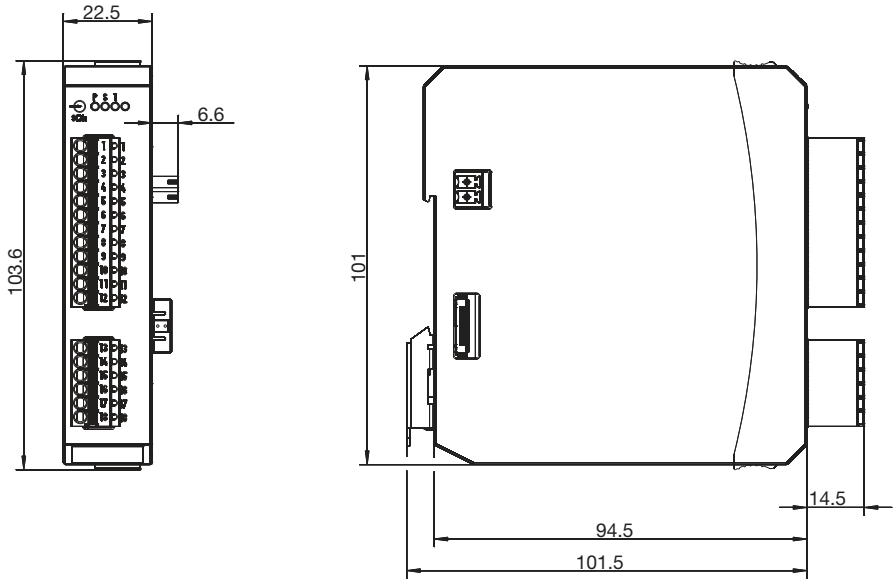

Module overview

Base units

- Central processing unit
  Data sheet 705001

Input/output modules

- Multichannel controller module
  Data sheet 705010
- Relay module 4-channel
  Data sheet 705015
- Analog input module 4-channel
  Data sheet 705020
- Analog input module 8-channel
  Data sheet 705021
- Analog output module 4-channel
  Data sheet 705025
- Digital input/output module 12-channel
  Data sheet 705030
- Thyristor power controller type 70906x
  Data sheet 709061, 709062, 709063

Special modules

- Router module
  Data sheet 705040

Operating, visualization, recording

- Multifunction panel 840
  Data sheet 705060
- Operating panels
  Data sheet 705065

Power supply units

- 705090/05-33
  Data sheet 705090
- 705090/10-33
  Data sheet 705090

JUMO GmbH & Co. KG
Delivery address: Mackenrodtstraße 14, 36039 Fulda, Germany
Postal address: 36035 Fulda, Germany
Phone: +49 661 6003-0
Fax: +49 661 6003-607
e-mail: mail@jumo.net
Internet: www.jumo.net

JUMO Instrument Co. Ltd.
JUMO House
Temple Bank, Riverway
Harlow, Essex CM20 2DY, UK
Phone: +44 1279 635533
Fax: +44 1279 635262
e-mail: sales@jumo.co.uk
Internet: www.jumo.co.uk

JUMO Process Control, Inc.
8 Technology Boulevard
Canastota, NY 13031, USA
Phone: 315-697-JUMO
1-800-554-JUMO
Fax: 315-697-5867
e-mail: info@jumo.us
Internet: www.jumo.us

Order details

	(1)	**Basic type**
705021		Analog input module 8-channel
	(2)	**Voltage supply**
36		DC 24 V +25/-20 %
	(3)	**DNV GL approval**
000		Without approval
062		With DNV GL approval[a]

[a] The power supply unit used must also have a DNV GL or GL type approval (e.g. type 705090).

	(1)		(2)		(3)
Order code		/		/	
Order example	705021	/	36	/	000

Scope of delivery

1 analog input module, 8-channel
1 Installation Instructions

General accessories

Description	Part no.
JUMO mTRON T system manual, English	00575577
Setup program with program editor JUMO mTRON T (on MiniDVD), incl. USB cable (A-plug to mini-B-plug, 3 m)	00569494
Program editor JUMO mTRON T (on MiniDVD), incl. USB cable (A-plug to mini-B-plug, 3 m)	00622333
PCA3000/PCC JUMO software package	00431884
PC Evaluation Software PCA3000	00431882
Release automatic print for PC Evaluation Software PCA3000	00505548
PCA Communication Software PCC	00431879
Plant Visualization Software JUMO SVS3000: See data sheet 700755	-
USB cable A-plug mini-B-plug 3 m	00506252

Content of the Mini-DVD:
- Setup program with program editor JUMO mTRON T in case of part no. 00569494
- Program editor JUMO mTRON T in case of part no. 00622333
- CODESYS programming software (free version)
- CODESYS Repository Package - Operating panels (free version)
- GSD file JUMO mTRON T - CPU (free version)
- PC Evaluation Software PCA3000 (30-day trial version)
- PCA Communication Software PCC (30-day trial version)
- Documentation in PDF format

JUMO GmbH & Co. KG
Delivery address: Mackenrodtstraße 14, 36039 Fulda, Germany
Postal address: 36035 Fulda, Germany
Phone: +49 661 6003-0
Fax: +49 661 6003-607
e-mail: mail@jumo.net
Internet: www.jumo.net

JUMO Instrument Co. Ltd.
JUMO House
Temple Bank, Riverway
Harlow, Essex CM20 2DY, UK
Phone: +44 1279 635533
Fax: +44 1279 635262
e-mail: sales@jumo.co.uk
Internet: www.jumo.co.uk

JUMO Process Control, Inc.
8 Technology Boulevard
Canastota, NY 13031, USA
Phone: 315-697-JUMO
1-800-554-JUMO
Fax: 315-697-5867
e-mail: info@jumo.us
Internet: www.jumo.us

JUMO mTRON T
Measuring, Control, and Automation System

Analog output module 4-channel

Brief description

The analog output module 4-channel is equipped with four outputs. The output signal, 0(2) to 10 V or 0(4) to 20 mA, can be configured individually for each channel.

The analog outputs are controlled via the system bus.

LEDs are used to indicate applied voltage supply and the module operating status.

For retrofitting or service work, the module insert can be easily pulled out of the case to the front. The case, including the bus PCB, remains installed on the DIN rail.

The user can use a setup program or the multifunction panel 840 for straight-forward configuration of the analog output module 4-channel.

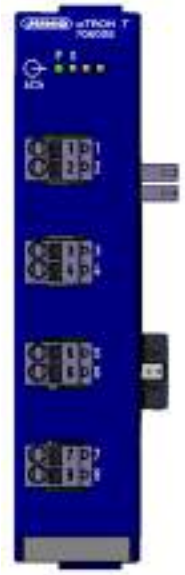

Type 705025/...

Block diagram

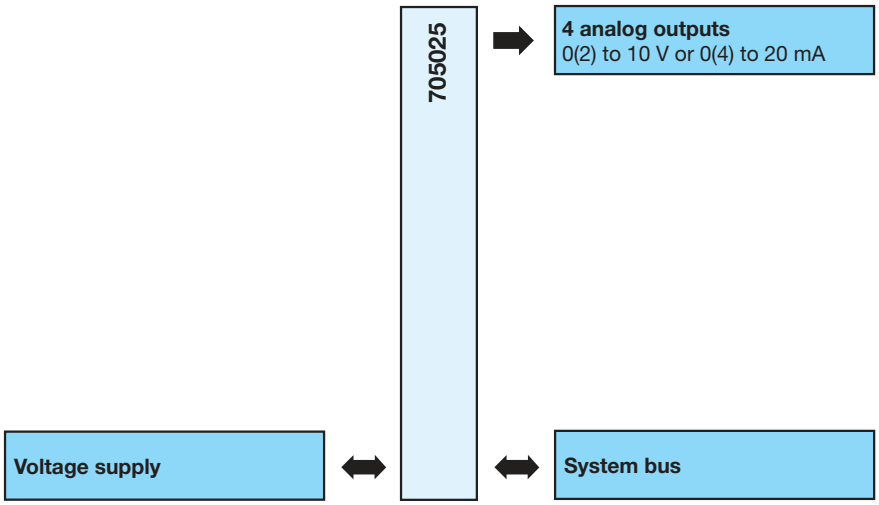

Features

- Four analog outputs 0(2) to 10 V or 0(4) to 20 mA (configurable per channel)
- Configurable behavior in case of an error, e.g. acc. to NAMUR recommendation NE 43
- Automatic configuration after the module insert has been exchanged (hot swappable)
- Connection of outputs on front
- Removable terminal strips with Push-In technology
- Quick wiring of operating voltage and system bus provided by simple module connection principle

Approvals/approval marks (see "Technical data")

JUMO GmbH & Co. KG
Delivery address: Mackenrodtstraße 14, 36039 Fulda, Germany
Postal address: 36035 Fulda, Germany
Phone: +49 661 6003-0
Fax: +49 661 6003-607
e-mail: mail@jumo.net
Internet: www.jumo.net

JUMO Instrument Co. Ltd.
JUMO House
Temple Bank, Riverway
Harlow, Essex CM20 2DY, UK
Phone: +44 1279 635533
Fax: +44 1279 635262
e-mail: sales@jumo.co.uk
Internet: www.jumo.co.uk

JUMO Process Control, Inc.
8 Technology Boulevard
Canastota, NY 13031, USA
Phone: 315-697-JUMO
1-800-554-JUMO
Fax: 315-697-5867
e-mail: info@jumo.us
Internet: www.jumo.us

Technical data

Analog outputs

4 analog outputs (configurable)	Load resistance R_{load}	Accuracy	Ambient temperature influence
Voltage DC 0(2) to 10 V	≥ 500 Ω	< 0.1 %	± 150 ppm/K
Current DC 0(4) to 20 mA	≤ 500 Ω	< 0.1 %	± 150 ppm/K

Selectable output behavior in case of an error acc. to NAMUR recommendation NE 43 (for signal type 2 to 10 V and 4 to 20 mA).

Electrical data

Voltage supply	
Connection	Lateral (feed via base unit or router module)
Voltage	DC 24 V +25/-20 %
Residual ripple	5 %
Current consumption	240 mA (at DC 19.2 V)
Power consumption	4.8 W
Outputs (terminals 1 to 8)	
Connection	At the front (removable terminal strips with Push-In technology)
Conductor cross section on terminals 1 to 8	
Wire or strand without ferrule	Min. 0.14 mm^2, max. 1.5 mm^2
Strand with ferrule	Without plastic collar: min. 0.25 mm^2, max. 1.5 mm^2 With plastic collar: min. 0.25 mm^2, max. 0.5 mm^2
Stripping length on terminals 1 to 8	9 mm
Electrical safety	According to DIN EN 61010-1 Overvoltage category III, pollution degree 2
Electromagnetic compatibility	Acc. to DIN EN 61326-1
Interference emission	Class A - only for industrial use -
Interference immunity	Industrial requirement

Case and ambient conditions

Case type	Plastic case for DIN rail mounting in the control cabinet (indoor use); DIN rail acc. to DIN EN 60715, 35 mm x 7.5 mm x 1 mm
Dimensions (W × H × D)	22.5 mm × 103.6 mm × 101.5 mm (without connection elements)
Weight	Approx. 140 g
Protection type	IP 20, according to DIN EN 60529
Ambient temperature range	-20 to +55 °C
Storage temperature range	-40 to +70 °C
Resistance to climatic conditions	Relative humidity ≤ 90 % annual average without condensation (climatic class 3K3 acc. to DIN EN 60721-3-3 with extended temperature and humidity range)
Site altitude	Up to 2000 m above sea level
Mechanical ambient conditions[a]	Classification acc. to DIN EN 60721-3-3, table 6, class 3M2

[a] Test conditions are listed in the System Description B 705000.8.

JUMO GmbH & Co. KG
Delivery address: Mackenrodtstraße 14, 36039 Fulda, Germany
Postal address: 36035 Fulda, Germany
Phone: +49 661 6003-0
Fax: +49 661 6003-607
e-mail: mail@jumo.net
Internet: www.jumo.net

JUMO Instrument Co. Ltd.
JUMO House
Temple Bank, Riverway
Harlow, Essex CM20 2DY, UK
Phone: +44 1279 635533
Fax: +44 1279 635262
e-mail: sales@jumo.co.uk
Internet: www.jumo.co.uk

JUMO Process Control, Inc.
8 Technology Boulevard
Canastota, NY 13031, USA
Phone: 315-697-JUMO
1-800-554-JUMO
Fax: 315-697-5867
e-mail: info@jumo.us
Internet: www.jumo.us

Approval/approval marks

Approval mark	Testing agency	Certificate/certification number	Inspection basis	Valid for
c UL us	Underwriters Laboratories	E201387	UL 61010-1 (3. Ed.), CAN/CSA-22.2 No. 61010-1 (3. Ed.)	all types
DNV GL	DNV GL	TAA000016N	Class Guideline DNVGL-CG-0339	all types; a power supply unit with DNV GL or GL type approval is required (e.g. type 705090)

JUMO GmbH & Co. KG
Delivery address: Mackenrodtstraße 14, 36039 Fulda, Germany
Postal address: 36035 Fulda, Germany
Phone: +49 661 6003-0
Fax: +49 661 6003-607
e-mail: mail@jumo.net
Internet: www.jumo.net

JUMO Instrument Co. Ltd.
JUMO House
Temple Bank, Riverway
Harlow, Essex CM20 2DY, UK
Phone: +44 1279 635533
Fax: +44 1279 635262
e-mail: sales@jumo.co.uk
Internet: www.jumo.co.uk

JUMO Process Control, Inc.
8 Technology Boulevard
Canastota, NY 13031, USA
Phone: 315-697-JUMO
1-800-554-JUMO
Fax: 315-697-5867
e-mail: info@jumo.us
Internet: www.jumo.us

Display and connection elements

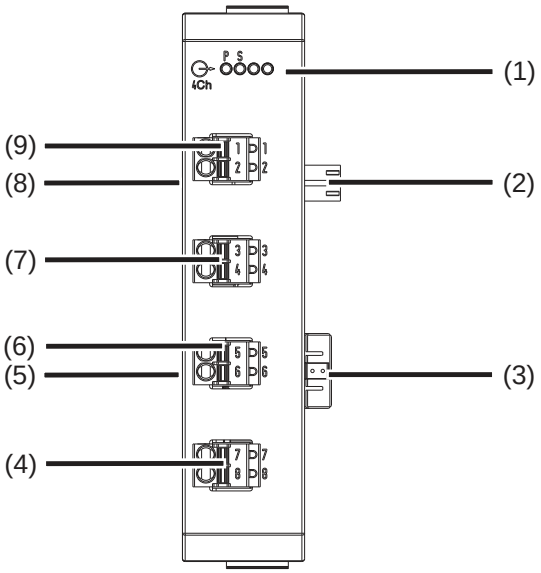

(1) Status displays (LED):
P = Voltage supply
S = Status
(2) Voltage supply Out, DC 24 V
(3) Side system bus Out
(4) Analog output 4
(5) Side system bus In
(6) Analog output 3
(7) Analog output 2
(8) Voltage supply In, DC 24 V
(9) Analog output 1

Electrical isolation

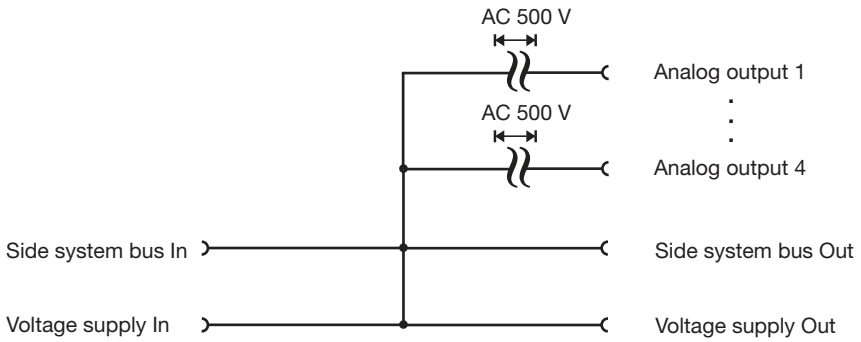

Connection diagram

The connection diagram included in the data sheet provides initial information about the connection options. Only use the installation instructions or the operating manual for the electrical connection. The know-how and the correct technical implementation of the safety warnings/ instructions contained in these documents are the prerequisite for the installation, electrical connection, and initial start as well as for the safety during operation.

Analog outputs

Connection	Output	Terminals	Symbol and terminal designation
Analog output DC 0(2) to 10 V or DC 0(4) to 20 mA (configurable)	1 2 3 4	1 and 2 3 and 4 5 and 6 7 and 8	+ —— 1, 3, 5, 7 U_X, I_X - —— 2, 4, 6, 8

JUMO GmbH & Co. KG
Delivery address: Mackenrodtstraße 14, 36039 Fulda, Germany
Postal address: 36035 Fulda, Germany
Phone: +49 661 6003-0
Fax: +49 661 6003-607
e-mail: mail@jumo.net
Internet: www.jumo.net

JUMO Instrument Co. Ltd.
JUMO House
Temple Bank, Riverway
Harlow, Essex CM20 2DY, UK
Phone: +44 1279 635533
Fax: +44 1279 635262
e-mail: sales@jumo.co.uk
Internet: www.jumo.co.uk

JUMO Process Control, Inc.
8 Technology Boulevard
Canastota, NY 13031, USA
Phone: 315-697-JUMO
1-800-554-JUMO
Fax: 315-697-5867
e-mail: info@jumo.us
Internet: www.jumo.us

Dimensions

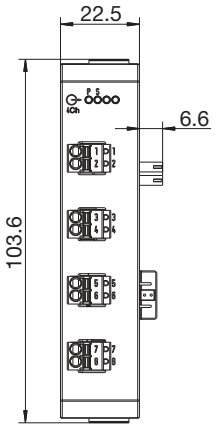

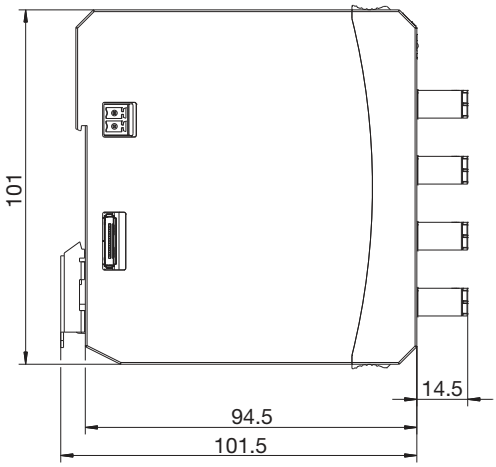

Module overview

Base units

- Central processing unit
  Data sheet 705001

Input/output modules

- Multichannel controller module
  Data sheet 705010
- Relay module 4-channel
  Data sheet 705015
- Analog input module 4-channel
  Data sheet 705020
- Analog input module 8-channel
  Data sheet 705021
- Analog output module 4-channel
  Data sheet 705025
- Digital input/output module 12-channel
  Data sheet 705030
- Thyristor power controller type 70906x
  Data sheet 709061, 709062, 709063

Special modules

- Router module
  Data sheet 705040

Operating, visualization, recording

- Multifunction panel 840
  Data sheet 705060
- Operating panels
  Data sheet 705065

Power supply units

- 705090/05-33
  Data sheet 705090
- 705090/10-33
  Data sheet 705090

JUMO GmbH & Co. KG
Delivery address: Mackenrodtstraße 14, 36039 Fulda, Germany
Postal address: 36035 Fulda, Germany
Phone: +49 661 6003-0
Fax: +49 661 6003-607
e-mail: mail@jumo.net
Internet: www.jumo.net

JUMO Instrument Co. Ltd.
JUMO House
Temple Bank, Riverway
Harlow, Essex CM20 2DY, UK
Phone: +44 1279 635533
Fax: +44 1279 635262
e-mail: sales@jumo.co.uk
Internet: www.jumo.co.uk

JUMO Process Control, Inc.
8 Technology Boulevard
Canastota, NY 13031, USA
Phone: 315-697-JUMO
1-800-554-JUMO
Fax: 315-697-5867
e-mail: info@jumo.us
Internet: www.jumo.us

Order details

	(1)	**Basic type**
705025		Analog output module 4-channel
	(2)	**Voltage supply**
36		DC 24 V +25/-20 %
	(3)	**DNV GL approval**
000		Without approval
062		With DNV GL approval[a]

[a] The power supply unit used must also have a DNV GL or GL type approval (e.g. type 705090).

	(1)		(2)		(3)
Order code		/		/	
Order example	705025	/	36	/	000

Scope of delivery

1 analog output module 4-channel
1 installation instructions

General accessories

Description	Part no.
JUMO mTRON T system manual, English	00575577
Setup program with program editor JUMO mTRON T (on MiniDVD), incl. USB cable (A-plug to mini-B-plug, 3 m)	00569494
Program editor JUMO mTRON T (on MiniDVD), incl. USB cable (A-plug to mini-B-plug, 3 m)	00622333
PCA3000/PCC JUMO software package	00431884
PC Evaluation Software PCA3000	00431882
Release automatic print for PC Evaluation Software PCA3000	00505548
PCA Communication Software PCC	00431879
Plant Visualization Software JUMO SVS3000: See data sheet 700755	-
USB cable A-plug mini-B-plug 3 m	00506252

Content of the Mini-DVD:
- Setup program with program editor JUMO mTRON T in case of part no. 00569494
- Program editor JUMO mTRON T in case of part no. 00622333
- CODESYS programming software (free version)
- CODESYS Repository Package - Operating panels (free version)
- GSD file JUMO mTRON T - CPU (free version)
- PC Evaluation Software PCA3000 (30-day trial version)
- PCA Communication Software PCC (30-day trial version)
- Documentation in PDF format

JUMO GmbH & Co. KG
Delivery address: Mackenrodtstraße 14
36039 Fulda, Germany
Postal address: 36035 Fulda, Germany
Phone: +49 661 6003-0
Fax: +49 661 6003-607
Email: mail@jumo.net
Internet: www.jumo.net

JUMO Instrument Co. Ltd.
JUMO House
Temple Bank, Riverway
Harlow, Essex, CM20 2DY, UK
Phone: +44 1279 63 55 33
Fax: +44 1279 62 50 29
Email: sales@jumo.co.uk
Internet: www.jumo.co.uk

JUMO Process Control, Inc.
6733 Myers Road
East Syracuse, NY 13057, USA
Phone: +1 315 437 5866
Fax: +1 315 437 5860
Email: info.us@jumo.net
Internet: www.jumousa.com

JUMO mTRON T
Measuring, Control, and Automation System

Digital input/output module 12-channel

Brief description

The module is equipped with 12 channels which can optionally be configured as digital inputs or digital outputs. The digitized input states are available in the system for further processing. The digital outputs are actuated via the system bus by digital signals.

The load current of up to 6 A (12 × max. 500 mA) must be provided via the terminals +24V/GND at the front.

LEDs are used to indicate applied voltage supply, the module operating status, as well as the digital input/output status.

A setup program or the multifunction panel 840 can be used to comfortably configure the digital input/output module.

For service work, the module insert can be easily pulled out of the case at the front. The case including the bus PCB remains mounted on the DIN rail.

Type 705030/...

Block diagram

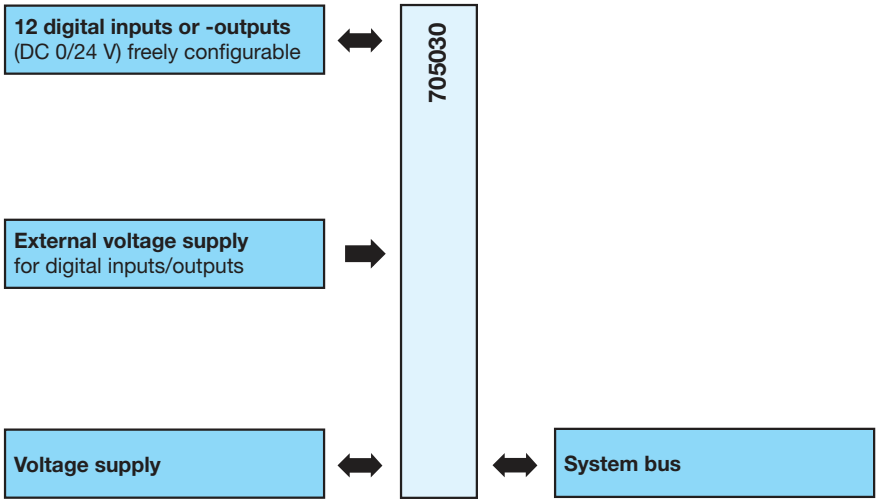

Features

- 12 digital inputs or outputs
- Channels are configurable individually as digital input DC 0/24 V or digital output DC 0/24 V / max. 500 mA
- Supply of external voltage for digital inputs/ outputs through terminal at the front
- Automatic configuration after the module insert has been exchanged (hot swappable)
- Connection of the inputs/outputs at the front
- Removable terminal strips with Push-In technology
- Quick wiring of operating voltage and system bus due to easy module connection

Approval/approval marks (see “Technical data”)

JUMO GmbH & Co. KG
Delivery address: Mackenrodtstraße 14
36039 Fulda, Germany
Postal address: 36035 Fulda, Germany
Phone: +49 661 6003-0
Fax: +49 661 6003-607
Email: mail@jumo.net
Internet: www.jumo.net

JUMO Instrument Co. Ltd.
JUMO House
Temple Bank, Riverway
Harlow, Essex, CM20 2DY, UK
Phone: +44 1279 63 55 33
Fax: +44 1279 62 50 29
Email: sales@jumo.co.uk
Internet: www.jumo.co.uk

JUMO Process Control, Inc.
6733 Myers Road
East Syracuse, NY 13057, USA
Phone: +1 315 437 5866
Fax: +1 315 437 5860
Email: info.us@jumo.net
Internet: www.jumousa.com

Technical data

Digital inputs and outputs

Number	12
Digital inputs	
Input signal	DC 0/24 V (PLC level; logical ”0“ = -3 to +5 V; logical ”1“ = +15 to +30 V)
Current	Max. 5 mA per input
Digital outputs	
Output signal	DC 0/24 V (depending on external voltage supply)
Current	Max. 500 mA per output, short-circuit proof

Electrical data

Voltage supply	For module electronics
Connection	Lateral (feed via base unit or router module)
Voltage	DC 24 V +25/-20 %
Residual ripple	5 %
External voltage supply	For digital inputs/outputs
Connection	At the front
Voltage	DC 24 V +25/-20 % SELV
Current	Max. 6 A
Short-circuit protection	6.3 A (internal fuse)
Current consumption	90 mA (module electronics only; at DC 19.2 V)
Power consumption	2 W (module electronics only)
Inputs or outputs (terminals 1 to 12) and external voltage supply (2-pole terminal GND/+24 V)	At the front (removable terminal strips with Push-In technology)
Conductor cross section on terminals 1 to 12	
Wire or strand without ferrule	Min. 0.14 mm^2, max. 1.5 mm^2
Strand with ferrule	Without plastic collar: Min. 0.25 mm^2, max. 1.5 mm^2
Strand with ferrule	With plastic collar: Min. 0.25 mm^2, max. 0.5 mm^2
Stripping length on terminals 1 to 12	9 mm
Conductor cross section on terminals GND and +24 V	
Wire or strand without ferrule	Min. 1.5 mm^2, max. 2.5 mm^2
Strand with ferrule	Min. 1.5 mm^2, max. 2.5 mm^2
2× strand with twin ferrule with plastic collar	1.5 mm^2
Stripping length on terminals GND and +24 V	10 mm
Electrical safety	Acc. to DIN EN 61010-1 Overvoltage category III, pollution degree 2
Electromagnetic compatibility	Acc. to DIN EN 61326-1
Interference emission	Class A – only for industrial use –
Interference immunity	Industrial requirements

JUMO GmbH & Co. KG
Delivery address: Mackenrodtstraße 14
36039 Fulda, Germany
Postal address: 36035 Fulda, Germany
Phone: +49 661 6003-0
Fax: +49 661 6003-607
Email: mail@jumo.net
Internet: www.jumo.net

JUMO Instrument Co. Ltd.
JUMO House
Temple Bank, Riverway
Harlow, Essex, CM20 2DY, UK
Phone: +44 1279 63 55 33
Fax: +44 1279 62 50 29
Email: sales@jumo.co.uk
Internet: www.jumo.co.uk

JUMO Process Control, Inc.
6733 Myers Road
East Syracuse, NY 13057, USA
Phone: +1 315 437 5866
Fax: +1 315 437 5860
Email: info.us@jumo.net
Internet: www.jumousa.com

Case and ambient conditions

Case type	Plastic case for DIN rail mounting in the control cabinet (indoor use); DIN rail acc. to DIN EN 60715, 35 mm x 7.5 mm x 1 mm
Dimensions (W x H x D)	22.5 mm x 103.6 mm x 101.5 mm (without connection elements)
Weight	Approx. 130 g
Protection type	IP20, acc. to DIN EN 60529
Ambient temperature range	-20 to +55 °C
Storage temperature range	-40 to +70 °C
Resistance to climatic conditions	Relative humidity ≤ 90 % annual average without condensation (climatic class 3K3 acc. to DIN EN 60721-3-3 with extended temperature and humidity range)
Site altitude	Up to 2000 m above sea level
Mechanical ambient conditions[a]	Classification acc. to DIN EN 60721-3-3, table 6, class 3M2

[a] Test conditions are listed in the System Descripton B 705000.8.

Approval/approval marks

Approval mark	Testing agency	Certificate/certification number	Inspection basis	Valid for
c UL us	Underwriters Laboratories	E201387	UL 61010-1 (3. Ed.), CAN/CSA-22.2 No. 61010-1 (3. Ed.)	all types
DNV GL	DNV GL	TAA000016N	Class Guideline DNVGL-CG-0339	all types; a power supply unit with DNV GL or GL type approval is required (e.g. type 705090)

JUMO GmbH & Co. KG
Delivery address: Mackenrodtstraße 14
36039 Fulda, Germany
Postal address: 36035 Fulda, Germany
Phone: +49 661 6003-0
Fax: +49 661 6003-607
Email: mail@jumo.net
Internet: www.jumo.net

JUMO Instrument Co. Ltd.
JUMO House
Temple Bank, Riverway
Harlow, Essex, CM20 2DY, UK
Phone: +44 1279 63 55 33
Fax: +44 1279 62 50 29
Email: sales@jumo.co.uk
Internet: www.jumo.co.uk

JUMO Process Control, Inc.
6733 Myers Road
East Syracuse, NY 13057, USA
Phone: +1 315 437 5866
Fax: +1 315 437 5860
Email: info.us@jumo.net
Internet: www.jumousa.com

Display and connection elements

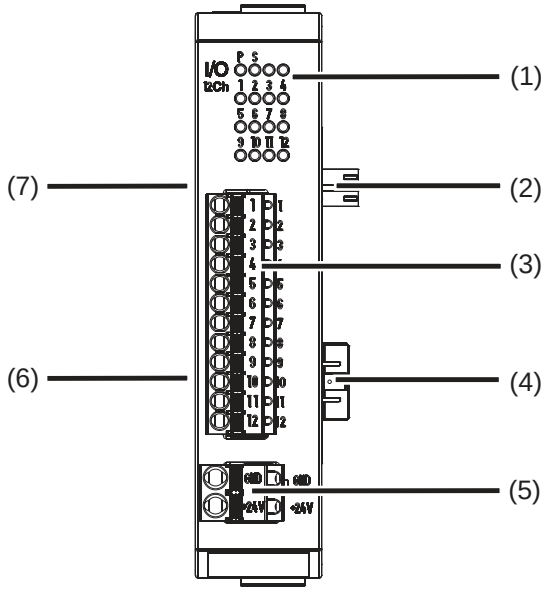

(1) Status displays (LED)
P = Voltage supply
S = Status
1 to 12 = Digital input/output
(LED is lit: Active)

(2) Voltage supply Out, DC 24 V

(3) Digital inputs/outputs

(4) Side system bus Out

(5) External voltage supply DC 24 V

(6) Side system bus In

(7) Voltage supply In, DC 24 V

Electrical isolation

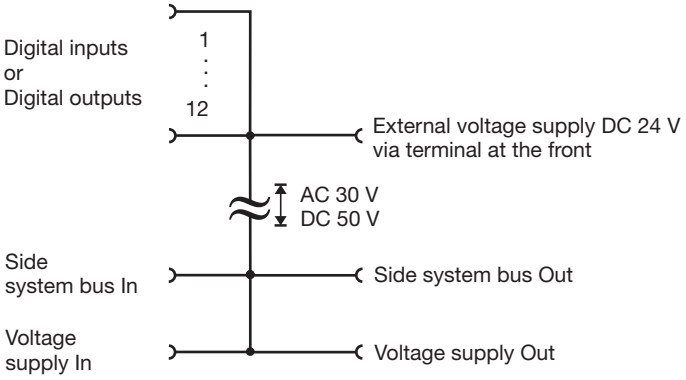

JUMO GmbH & Co. KG
Delivery address: Mackenrodtstraße 14
36039 Fulda, Germany
Postal address: 36035 Fulda, Germany
Phone: +49 661 6003-0
Fax: +49 661 6003-607
Email: mail@jumo.net
Internet: www.jumo.net

JUMO Instrument Co. Ltd.
JUMO House
Temple Bank, Riverway
Harlow, Essex, CM20 2DY, UK
Phone: +44 1279 63 55 33
Fax: +44 1279 62 50 29
Email: sales@jumo.co.uk
Internet: www.jumo.co.uk

JUMO Process Control, Inc.
6733 Myers Road
East Syracuse, NY 13057, USA
Phone: +1 315 437 5866
Fax: +1 315 437 5860
Email: info.us@jumo.net
Internet: www.jumousa.com

Connection diagram

The connection diagram included in the data sheet provides initial information about the connection options. Only use the installation instructions or the operating manual for the electrical connection. The know-how and the correct technical implementation of the safety warnings/instructions contained in these documents are the prerequisite for the installation, electrical connection, and initial start as well as for the safety during operation.

Digital input

The connection depends on the configuration (input or output).

Connection	Input	Terminals	Symbol and terminal designation
Apply signal DC 0/24 V to terminals 1 to 12 Ground reference via GND terminal required!	1 2 3 4 5 6 7 8 9 10 11 12	1 and GND 2 and GND 3 and GND 4 and GND 5 and GND 6 and GND 7 and GND 8 and GND 9 and GND 10 and GND 11 and GND 12 and GND	+ 1, 2, 3, 4, 5, 6, 7, 8, 9, 10, 11, 12 U_X - GND
Or:			
Switch DC 24 V from terminal +24 V to terminals 1 to 12 via floating contact. External voltage supply DC 24 V via terminals +24 V and GND required!	1 2 3 4 5 6 7 8 9 10 11 12	1 and +24 V 2 and +24 V 3 and +24 V 4 and +24 V 5 and +24 V 6 and +24 V 7 and +24 V 8 and +24 V 9 and +24 V 10 and +24 V 11 and +24 V 12 and +24 V	+24 V 1, 2, 3, 4, 5, 6, 7, 8, 9, 10, 11, 12

Digital outputs

The connection depends on the configuration (input or output).

Connection	Output	Terminals	Symbol and terminal designation
Output signal: DC 0/24 V / maximum 500 mA External voltage supply DC 24 V via terminals +24 V and GND required!	1 2 3 4 5 6 7 8 9 10 11 12	1 and GND 2 and GND 3 and GND 4 and GND 5 and GND 6 and GND 7 and GND 8 and GND 9 and GND 10 and GND 11 and GND 12 and GND	+ 1, 2, 3, 4, 5, 6, 7, 8, 9, 10, 11, 12 U_X - GND

External voltage supply

Connection	Terminals	Symbol and terminal designation
DC 24 V	GND und +24 V	- GND U_X + +24 V

JUMO GmbH & Co. KG
Delivery address: Mackenrodtstraße 14
36039 Fulda, Germany
Postal address: 36035 Fulda, Germany
Phone: +49 661 6003-0
Fax: +49 661 6003-607
Email: mail@jumo.net
Internet: www.jumo.net

JUMO Instrument Co. Ltd.
JUMO House
Temple Bank, Riverway
Harlow, Essex, CM20 2DY, UK
Phone: +44 1279 63 55 33
Fax: +44 1279 62 50 29
Email: sales@jumo.co.uk
Internet: www.jumo.co.uk

JUMO Process Control, Inc.
6733 Myers Road
East Syracuse, NY 13057, USA
Phone: +1 315 437 5866
Fax: +1 315 437 5860
Email: info.us@jumo.net
Internet: www.jumousa.com

Dimensions

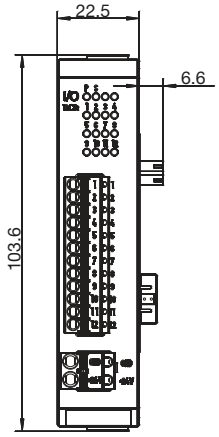

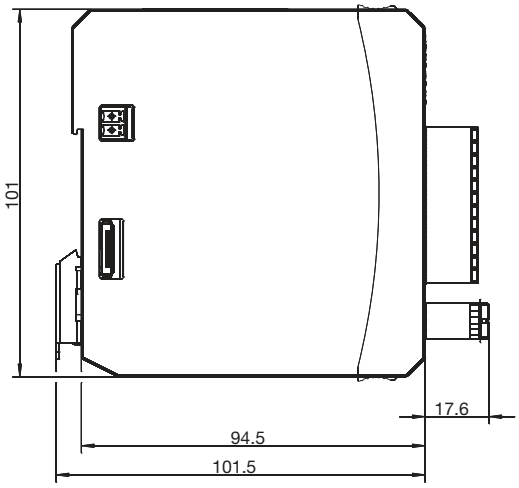

Module overview

Base units

- Central processing unit
  Data sheet 705001

Input/output modules

- Multichannel controller module
  Data sheet 705010
- Relay module 4-channel
  Data sheet 705015
- Analog input module 4-channel
  Data sheet 705020
- Analog input module 8-channel
  Data sheet 705021
- Analog output module 4-channel
  Data sheet 705025
- Digital input/output module 12-channel
  Data sheet 705030
- Thyristor power controller type 70906x
  Data sheet 709061, 709062, 709063

Special modules

- Router module
  Data sheet 705040

Operating, visualization, recording

- Multifunction panel 840
  Data sheet 705060
- Operating panels
  Data sheet 705065

Power supply units

- 705090/05-33
  Data sheet 705090
- 705090/10-33
  Data sheet 705090

JUMO GmbH & Co. KG
Delivery address: Mackenrodtstraße 14
36039 Fulda, Germany
Postal address: 36035 Fulda, Germany
Phone: +49 661 6003-0
Fax: +49 661 6003-607
Email: mail@jumo.net
Internet: www.jumo.net

JUMO Instrument Co. Ltd.
JUMO House
Temple Bank, Riverway
Harlow, Essex, CM20 2DY, UK
Phone: +44 1279 63 55 33
Fax: +44 1279 62 50 29
Email: sales@jumo.co.uk
Internet: www.jumo.co.uk

JUMO Process Control, Inc.
6733 Myers Road
East Syracuse, NY 13057, USA
Phone: +1 315 437 5866
Fax: +1 315 437 5860
Email: info.us@jumo.net
Internet: www.jumousa.com

Order details

	(1)	**Basic type**
705030		Digital input/output module 12-channel
	(2)	**Voltage supply**
36		DC 24 V +25/-20 %
	(3)	**DNV GL approval**
000		Without approval
062		With DNV GL approval[a]

[a] The power supply unit used must also have a DNV GL or GL type approval (e.g. type 705090).

	(1)		(2)		(3)
Order code		/		/	
Order example	705030	/	36	/	000

Scope of delivery

1 digital input/output module, 12-channel
1 Installation Instructions

General accessories

Description	Part no.
JUMO mTRON T system manual, English	00575577
Setup program with program editor JUMO mTRON T (on MiniDVD), incl. USB cable (A-plug to mini-B-plug, 3 m)	00569494
Program editor JUMO mTRON T (on MiniDVD), incl. USB cable (A-plug to mini-B-plug, 3 m)	00622333
PCA3000/PCC JUMO software package	00431884
PC Evaluation Software PCA3000	00431882
Release automatic print for PC Evaluation Software PCA3000	00505548
PCA Communication Software PCC	00431879
Plant Visualization Software JUMO SVS3000: See data sheet 700755	-
USB cable A-plug mini-B-plug 3 m	00506252

Content of the Mini-DVD:
- Setup program with program editor JUMO mTRON T in case of part no. 00569494
- Program editor JUMO mTRON T in case of part no. 00622333
- CODESYS programming software (free version)
- CODESYS Repository Package - Operating panels (free version)
- GSD file JUMO mTRON T - CPU (free version)
- PC Evaluation Software PCA3000 (30-day trial version)
- PCA Communication Software PCC (30-day trial version)
- Documentation in PDF format

JUMO GmbH & Co. KG
Delivery address: Mackenrodtstraße 14
36039 Fulda, Germany
Postal address: 36035 Fulda, Germany
Phone: +49 661 6003-0
Fax: +49 661 6003-607
Email: mail@jumo.net
Internet: www.jumo.net

JUMO Instrument Co. Ltd.
JUMO House
Temple Bank, Riverway
Harlow, Essex, CM20 2DY, UK
Phone: +44 1279 63 55 33
Fax: +44 1279 62 50 29
Email: sales@jumo.co.uk
Internet: www.jumo.co.uk

JUMO Process Control, Inc.
6733 Myers Road
East Syracuse, NY 13057, USA
Phone: +1 315 437 5866
Fax: +1 315 437 5860
Email: info.us@jumo.net
Internet: www.jumousa.com

Digital Input/Output Module 32-Channel

705031

Brief description

The digital input/output module 32-channel (705031) is a system component of the automation system JUMO variTRON.

The module is equipped with 17 fixed digital outputs DC 0/24 V. Using the three expansion slots, the module can be expanded with up to 15 digital inputs or digital outputs in different combinations.

The digitized input states are available in the system for further processing. The digital outputs are controlled via the system bus by digital signals.

The load current is to be supplied through the front terminals +24 V/GND. LEDs are used to indicate the voltage supply and the module operating statuses.

A setup program can be used to conveniently configure the digital input/output module.

For service purposes the module insert can be easily pulled out of the case at the front. The case, including the bus board, remains installed on the DIN rail.

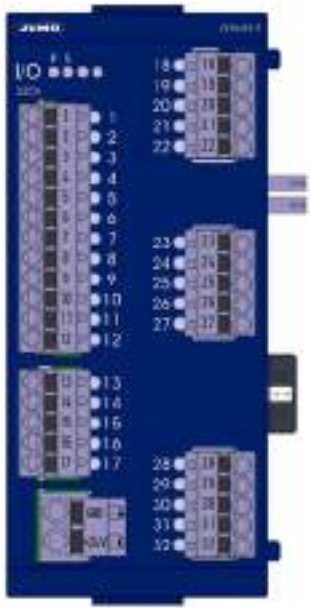

Type 705031

Block diagram

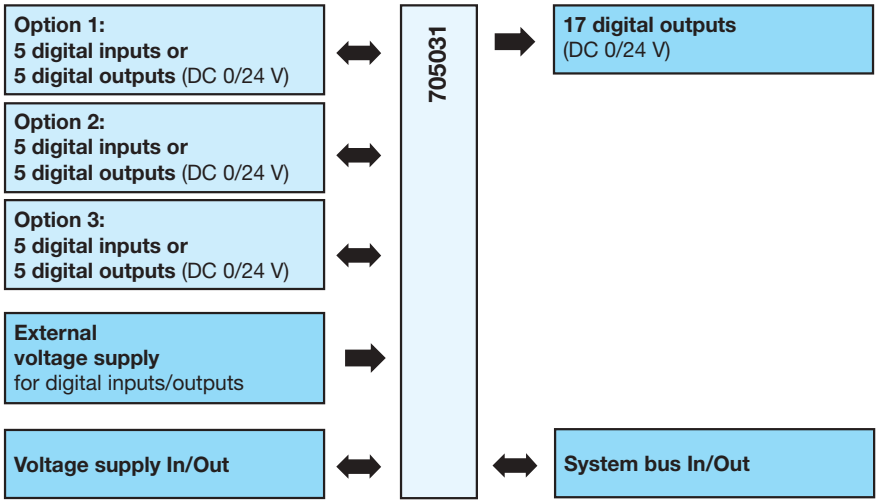

Features

- Compatible with JUMO variTRON as of system version 3
- 17 digital outputs
- Up to 15 additional digital outputs or digital inputs
- External voltage supply for the inputs and outputs via terminal on front
- Automatic configuration after the module insert has been exchanged (hot swappable)
- Connection of inputs and outputs on the front
- Removable terminal strips with Push-In technology
- Quick wiring of operating voltage and system bus provided by simple module connection principle

Approvals and approval marks (see "Technical data")

JUMO GmbH & Co. KG
Delivery address: Mackenrodtstraße 14
36039 Fulda, Germany
Postal address: 36035 Fulda, Germany
Phone: +49 661 6003-0
Fax: +49 661 6003-607
Email: mail@jumo.net
Internet: www.jumo.net

JUMO Instrument Co. Ltd.
JUMO House
Temple Bank, Riverway
Harlow, Essex, CM20 2DY, UK
Phone: +44 1279 63 55 33
Fax: +44 1279 62 50 29
Email: sales@jumo.co.uk
Internet: www.jumo.co.uk

JUMO Process Control, Inc.
6733 Myers Road
East Syracuse, NY 13057, USA
Phone: +1 315 437 5866
Fax: +1 315 437 5860
Email: info.us@jumo.net
Internet: www.jumousa.com

Technical data

Digital inputs

Quantity	Max. 15
Per optional board (expansion slots 1 to 3)	5
Input signal	DC 0/24 V (PLC level; logical “0” = -3 to +5 V; logical “1” = 15 to 30 V)
Current	Max. 5 mA per input

Digital outputs

Quantity	Max. 32
Standard version	17
Per optional board (expansion slots 1 to 3)	5
Output signal	DC 0/24 V (depending on external voltage supply)
Current per output	Max. 500 mA, short-circuit proof
Total current of all outputs	Max. 16 A Observe electrical data for the external voltage supply!

Electrical data

Voltage supply	For module electronics		
Connection	Lateral (supply via central processing unit or router module 705042)		
Voltage	DC 24 V +25/-20 % SELV		
Residual ripple	5 %		
Current consumption	Max. 123 mA (module electronics only; at DC 19.2 V)		
Power consumption	Max. 3 W (module electronics only)		
External voltage supply	For digital inputs/outputs		
Connection	At the front (removable terminal strip, 2-pole with Push In technology)		
Voltage	DC 24 V +25/-20 % SELV		
Residual ripple	5 %		
Admissible current	Depending on the ambient temperature and mounting distance above the module		
	At 70 mm distance:	At 35 mm distance:	
	55 °C: max. 13.0 A	55 °C: max. 10.0 A	
	54 °C: max. 13.5 A		
	51 °C: max. 14.0 A		
	48 °C: max. 14.5 A		
	45 °C: max. 15.0 A		
	42 °C: max. 15.5 A		
	≤ 40 °C: max. 16.0 A		
Inputs and outputs (terminals 1 to 32) and external voltage supply (terminals GND and +24 V)	At the front (removable terminal strips with Push In technology)		
Conductor cross section on terminals 1 to 32			
Wire or stranded wire without ferrule	Min. 0.14 mm^2, max. 1.5 mm^2		
Stranded wire with ferrule	Without plastic collar: min. 0.25 mm^2, max. 1.5 mm^2 With plastic collar: min. 0.25 mm^2, max. 0.5 mm^2		
Stripping length on terminals 1 to 32	9 mm		

JUMO GmbH & Co. KG
Delivery address: Mackenrodtstraße 14
36039 Fulda, Germany
Postal address: 36035 Fulda, Germany
Phone: +49 661 6003-0
Fax: +49 661 6003-607
Email: mail@jumo.net
Internet: www.jumo.net

JUMO Instrument Co. Ltd.
JUMO House
Temple Bank, Riverway
Harlow, Essex, CM20 2DY, UK
Phone: +44 1279 63 55 33
Fax: +44 1279 62 50 29
Email: sales@jumo.co.uk
Internet: www.jumo.co.uk

JUMO Process Control, Inc.
6733 Myers Road
East Syracuse, NY 13057, USA
Phone: +1 315 437 5866
Fax: +1 315 437 5860
Email: info.us@jumo.net
Internet: www.jumousa.com

Conductor cross section on terminals GND and +24 V	
Wire or stranded wire without ferrule	Min. 1.5 mm^2, max. 2.5 mm^2
Stranded wire with ferrule	Min. 1.5 mm^2, max. 2.5 mm^2
2 × stranded wire with twin core-end ferrule with plastic collar	1.5 mm^2
Stripping length on terminals GND and +24 V	10 mm
Electrical safety	According to DIN EN 61010-1 Overvoltage category III, pollution degree 2
Protection rating	III
Electromagnetic compatibility	Acc. to DIN EN 61326-1
Interference emission	Class A - only for industrial use -
Interference immunity	Industrial requirement

Housing and environmental conditions

Case type	Plastic case for DIN rail mounting in the control cabinet (indoor use); DIN rail acc. to DIN EN 60715, 35 mm x 7.5 mm x 1 mm
Dimensions (W × H × D)	45 mm × 103.6 mm × 101.5 mm (without connection elements)
Weight (fully fitted)	Approx. 205 g
Protection type	IP20, according to DIN EN 60529
Ambient temperature range	-20 to +55 °C
Storage temperature range	-40 to +70 °C
Resistance to climatic conditions	Relative humidity ≤ 90 % annual average without condensation (climate class 3K3 acc. to DIN EN 60721-3-3 with extended temperature and humidity range)
Site altitude	Up to 2000 m above sea level
Vibration	Acc. to DIN EN 60068-2-6, table C.2
Amplitude	0.15 mm from 10 to 58.1 Hz
Acceleration	20 m/s^2 from 58.1 to 150 Hz
Shock	Acc. to DIN EN 60068-2-27, table A.1
Peak acceleration	150 m/s^2
Shock duration	11 ms

Approvals and approval marks

Approval mark	Test facility	Certificate/certification number	Inspection basis	Valid for
c UL us	Underwriters Laboratories	E201387	UL 61010-1 (3. Ed.), CAN/CSA-22.2 No. 61010-1 (3. Ed.)	All types

JUMO GmbH & Co. KG
Delivery address: Mackenrodtstraße 14
36039 Fulda, Germany
Postal address: 36035 Fulda, Germany
Phone: +49 661 6003-0
Fax: +49 661 6003-607
Email: mail@jumo.net
Internet: www.jumo.net

JUMO Instrument Co. Ltd.
JUMO House
Temple Bank, Riverway
Harlow, Essex, CM20 2DY, UK
Phone: +44 1279 63 55 33
Fax: +44 1279 62 50 29
Email: sales@jumo.co.uk
Internet: www.jumo.co.uk

JUMO Process Control, Inc.
6733 Myers Road
East Syracuse, NY 13057, USA
Phone: +1 315 437 5866
Fax: +1 315 437 5860
Email: info.us@jumo.net
Internet: www.jumousa.com

Connection diagram

The connection diagram in the data sheet provides preliminary information about the connection options. For the electrical connection, only use the installation instructions or the operating manual. The knowledge and the correct technical compliance with the safety information and warnings contained in these documents are mandatory for mounting, electrical connection, and startup as well as for safety during operation.

Color coding of optional inputs and outputs

The optional digital inputs and digital outputs can be identified by the color of the pin header: black = digital inputs, gray = digital outputs. However, the terminal strips attached to the pin headers are gray in both cases. If necessary, the terminal strip must be pulled off to identify the color of the pin header. It must be ensured that this does not jeopardize the operation of the plant.

Digital inputs

All digital inputs are optional. The connection depends on the device version.

Connection	Input	Terminals	Symbol and terminal designation
Apply signal DC 0/24 V to the terminal of the relevant input (terminal 18 to 32). Ground reference via GND terminal required!	18 to 32	18 and GND to 32 and GND	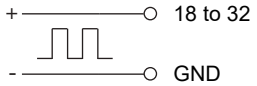
Or (alternative connection option):			
Apply the voltage DC 24 V from terminal +24 V via a potential-free contact to the terminal of the relevant input (terminal 18 to 32). External voltage supply DC 24 V required at terminals +24 V and GND!	18 to 32	18 and +24 V to 32 and +24 V	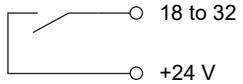

Digital outputs

The digital outputs 1 to 17 are available by default, the digital outputs 18 to 32 are optional. The connection of the optional digital outputs depends on the device version.

Connection	Output	Terminals	Symbol and terminal designation
Output signal DC 0/24 V / max. 500 mA External voltage supply DC 24 V required at terminals +24 V and GND!	1 to 17	1 and GND to 17 and GND	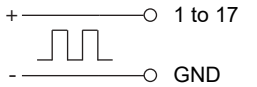
	18 to 32	18 and GND to 32 and GND	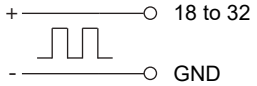

External voltage supply

Connection	Terminals	Symbol and terminal designation
DC 24 V (front)	+24 V and GND	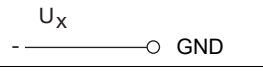

JUMO GmbH & Co. KG
Delivery address: Mackenrodtstraße 14
36039 Fulda, Germany
Postal address: 36035 Fulda, Germany
Phone: +49 661 6003-0
Fax: +49 661 6003-607
Email: mail@jumo.net
Internet: www.jumo.net

JUMO Instrument Co. Ltd.
JUMO House
Temple Bank, Riverway
Harlow, Essex, CM20 2DY, UK
Phone: +44 1279 63 55 33
Fax: +44 1279 62 50 29
Email: sales@jumo.co.uk
Internet: www.jumo.co.uk

JUMO Process Control, Inc.
6733 Myers Road
East Syracuse, NY 13057, USA
Phone: +1 315 437 5866
Fax: +1 315 437 5860
Email: info.us@jumo.net
Internet: www.jumousa.com

Display and connection elements

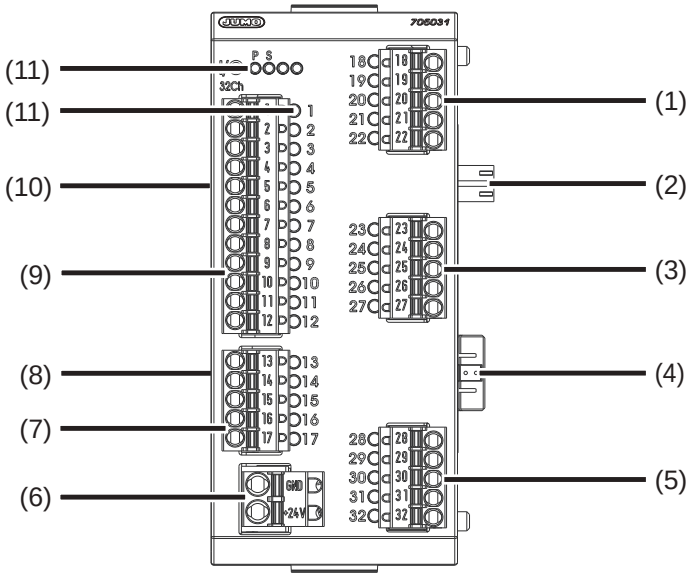

(1) Expansion slot 1:
Digital inputs or outputs 18 to 22

(2) Voltage supply Out, DC 24 V

(3) Expansion slot 2:
Digital inputs or outputs 23 to 27

(4) Side system bus Out

(5) Expansion slot 3:
Digital inputs or outputs 28 to 32

(6) External voltage supply DC 24 V

(7) Digital outputs 13 to 17

(8) Side system bus In

(9) Digital outputs 1 to 12

(10) Voltage supply In, DC 24 V

(11) Status displays (LED):
P = Voltage supply
S = Status
1 to 17 = Digital outputs (lit = active)
18 to 32 = Digital inputs/outputs (lit = active)

Electrical isolation

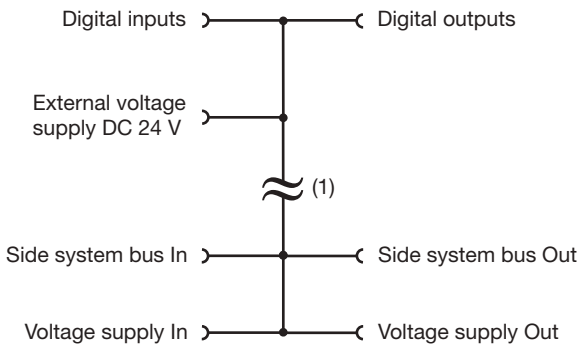

(1) Functional galvanic isolation for connection of SELV or PELV electrical circuits.

JUMO GmbH & Co. KG
Delivery address: Mackenrodtstraße 14
36039 Fulda, Germany
Postal address: 36035 Fulda, Germany
Phone: +49 661 6003-0
Fax: +49 661 6003-607
Email: mail@jumo.net
Internet: www.jumo.net

JUMO Instrument Co. Ltd.
JUMO House
Temple Bank, Riverway
Harlow, Essex, CM20 2DY, UK
Phone: +44 1279 63 55 33
Fax: +44 1279 62 50 29
Email: sales@jumo.co.uk
Internet: www.jumo.co.uk

JUMO Process Control, Inc.
6733 Myers Road
East Syracuse, NY 13057, USA
Phone: +1 315 437 5866
Fax: +1 315 437 5860
Email: info.us@jumo.net
Internet: www.jumousa.com

Dimensions

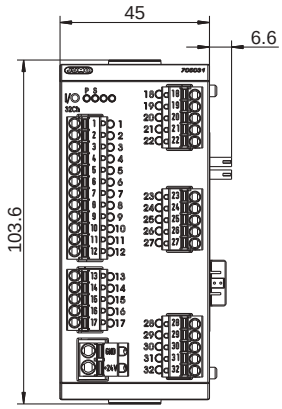

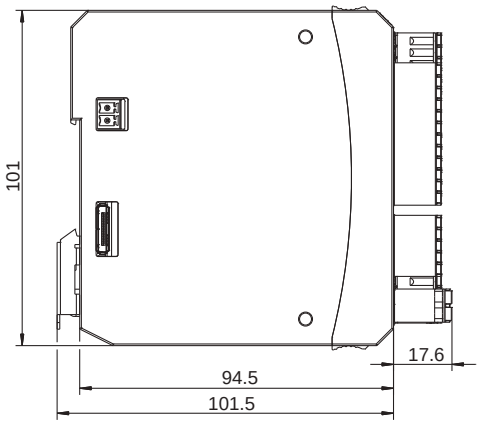

Compatibility

JUMO variTRON

See data sheet of the relevant central processing unit JUMO variTRON:
Data sheet 70500x

JUMO GmbH & Co. KG
Delivery address: Mackenrodtstraße 14
36039 Fulda, Germany
Postal address: 36035 Fulda, Germany
Phone: +49 661 6003-0
Fax: +49 661 6003-607
Email: mail@jumo.net
Internet: www.jumo.net

JUMO Instrument Co. Ltd.
JUMO House
Temple Bank, Riverway
Harlow, Essex, CM20 2DY, UK
Phone: +44 1279 63 55 33
Fax: +44 1279 62 50 29
Email: sales@jumo.co.uk
Internet: www.jumo.co.uk

JUMO Process Control, Inc.
6733 Myers Road
East Syracuse, NY 13057, USA
Phone: +1 315 437 5866
Fax: +1 315 437 5860
Email: info.us@jumo.net
Internet: www.jumousa.com

Order details

	(1)	**Basic type**
705031		Digital input/output module 32-channel (17 digital outputs)
	(2)	**Expansion slot 1**
00		Not used
01		5 digital inputs
02		5 digital outputs
	(3)	**Expansion slot 2**
00		Not used
01		5 digital inputs
02		5 digital outputs
	(4)	**Expansion slot 3**
00		Not used
01		5 digital inputs
02		5 digital outputs
	(5)	**Voltage supply**
36		DC 24 V +25/-20 %, SELV
	(6)	**DNV GL approval**
000		Without approval

	(1)		(2)	(3)	(4)		(5)		(6)
Order code	705031	/				-	36	/	000
Order example	705031	/	00	00	00	-	36	/	000

Scope of delivery

1 digital input/output module 32-channel
1 installation instructions

Accessories

Description	**Part no.**
Modules for option slots (expansion boards):	
5 digital inputs	00745044
5 digital outputs	00745045

JUMO GmbH & Co. KG
Delivery address: Mackenrodtstraße 14, 36039 Fulda, Germany
Postal address: 36035 Fulda, Germany
Phone: +49 661 6003-0
Fax: +49 661 6003-607
e-mail: mail@jumo.net
Internet: www.jumo.net

JUMO Instrument Co. Ltd.
JUMO House
Temple Bank, Riverway
Harlow, Essex CM20 2DY, UK
Phone: +44 1279 635533
Fax: +44 1279 635262
e-mail: sales@jumo.co.uk
Internet: www.jumo.co.uk

JUMO Process Control, Inc.
8 Technology Boulevard
Canastota, NY 13031, USA
Phone: 315-697-JUMO
1-800-554-JUMO
Fax: 315-697-5867
e-mail: info@jumo.us
Internet: www.jumo.us

JUMO mTRON T
Measuring, Control, and Automation System

Router module

Brief description

The router module is used to achieve decentralization within the automation system, which means that the input/output modules are dispersed to several DIN rails/switch cabinets. A distance of up to 100 m can lie between two router modules, between a router module and a base unit, or between a router module and a multifunction panel. A maximum of 30 router modules and a maximum of 30 input/output modules is possible in a system.

LEDs are used to indicate applied voltage supply and the operating status of the module.

The electrical connection of the voltage supply for the router module is carried out at the front through a removable terminal strip.

No configuration of the router module is required. The router module is simply integrated into the overall system by the setup program. For special applications such as hot-connect the address of the router module can be set by rotary coding switches.

For service work, the module insert can be easily pulled out of the case at the front. The case including the bus PCB remains mounted on the DIN rail.

Type 705040/...

Block diagram

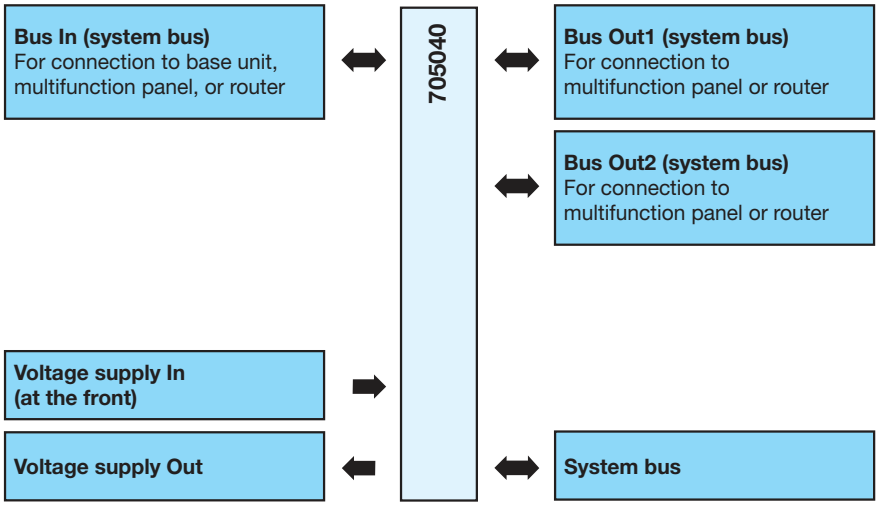

Features

- RJ45 system bus connections at the front (1 × Bus In, 2 × Bus Out)
- Support of distributed module arrangement
- Addressable by rotary coding switches for special applications
- Electrical isolation of the interfaces at the front
- Supply of operating voltage
- Quick wiring of operating voltage and system bus due to easy module connection

Approval/approval marks (see “Technical data”)

JUMO GmbH & Co. KG
Delivery address: Mackenrodtstraße 14, 36039 Fulda, Germany
Postal address: 36035 Fulda, Germany
Phone: +49 661 6003-0
Fax: +49 661 6003-607
e-mail: mail@jumo.net
Internet: www.jumo.net

JUMO Instrument Co. Ltd.
JUMO House
Temple Bank, Riverway
Harlow, Essex CM20 2DY, UK
Phone: +44 1279 635533
Fax: +44 1279 635262
e-mail: sales@jumo.co.uk
Internet: www.jumo.co.uk

JUMO Process Control, Inc.
8 Technology Boulevard
Canastota, NY 13031, USA
Phone: 315-697-JUMO
1-800-554-JUMO
Fax: 315-697-5867
e-mail: info@jumo.us
Internet: www.jumo.us

Description

Connection example

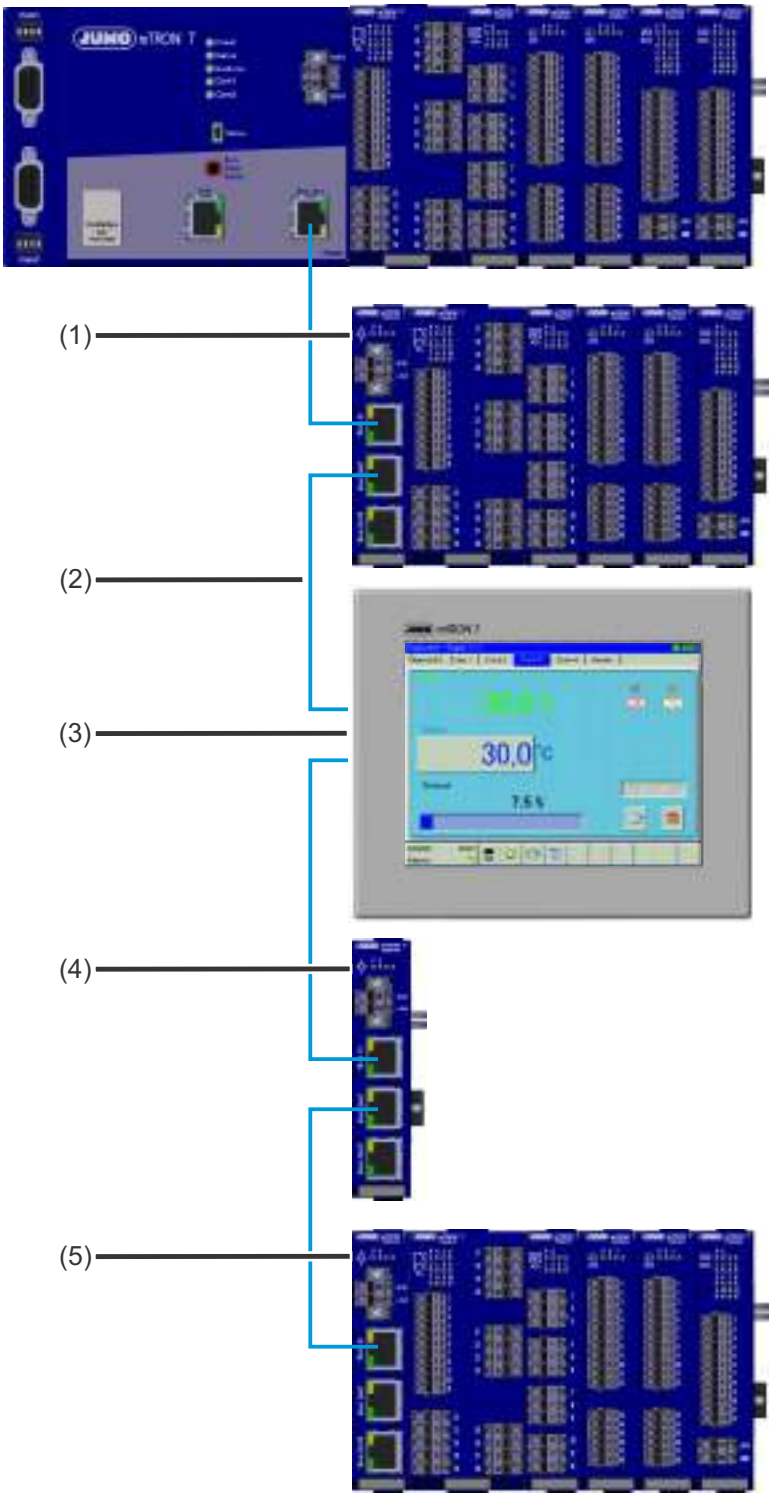

(1) Router module with downstream modules

(2) Network cable (patch or crossover cable), at least CAT5 (S/FTP); distance per connection up to 100 m

(3) Multifunction panel; instead of a router module

(4) Router module without downstream modules to increase the range

(5) Router module with downstream modules

In the shown connection example the voltage supply of the central processing unit, the router modules, and the multifunction panel are not taken into consideration.

Cross-linking JUMO mTRON T system bus is only possible with the shown devices (closed system); conventional Ethernet switch technology cannot be used.

JUMO GmbH & Co. KG
Delivery address: Mackenrodtstraße 14, 36039 Fulda, Germany
Postal address: 36035 Fulda, Germany
Phone: +49 661 6003-0
Fax: +49 661 6003-607
e-mail: mail@jumo.net
Internet: www.jumo.net

JUMO Instrument Co. Ltd.
JUMO House
Temple Bank, Riverway
Harlow, Essex CM20 2DY, UK
Phone: +44 1279 635533
Fax: +44 1279 635262
e-mail: sales@jumo.co.uk
Internet: www.jumo.co.uk

JUMO Process Control, Inc.
8 Technology Boulevard
Canastota, NY 13031, USA
Phone: 315-697-JUMO
1-800-554-JUMO
Fax: 315-697-5867
e-mail: info@jumo.us
Internet: www.jumo.us

Technical data

Interfaces

Bus In (system bus)	
Application	For connection of a base unit, a router module or a multifunction panel
Number	1
Connection	At the front, RJ45 socket
Connection cable	Network cable (patch cable or crossover cable), at least CAT5 (S/FTP)
Cable length	Up to 100 m
Bus Out1 and Bus Out2 (system bus)	
Application	For connection of further router modules or a multifunction panel
Number	2
Connection	At the front, RJ45 socket
Connection cable	Network cable (patch or crossover cable), at least CAT5 (S/FTP)
Cable length	Up to 100 m

Electrical data

Voltage supply	
Connection	At the front (removable 2-pole terminal strip with Push-In technology)
Voltage input	DC 24 V +25/-20 % SELV
Residual ripple	5 %
Current consumption	100 mA (at DC 19.2 V) Current consumption of lined-up modules also has to be considered (see „Hardware configuration“ in the setup program)!
Power consumption	2 W
Conductor cross section (voltage supply)	
Wire or strand without ferrule	Min. 1.5 mm^2, max. 2.5 mm^2
Strand with ferrule	Min. 1.5 mm^2, max. 2.5 mm^2
2 x strand with twin ferrule with plastic collar	1.5 mm^2
Stripping length	10 mm
Electrical safety	Acc. to DIN EN 61010-1 Overvoltage category III, pollution degree 2
Electromagnetic compatibility	Acc. to EN 61326-1
Interference emission	Class A – only for industrial use –
Interference immunity	Industrial requirements

Case and ambient conditions

Case type	Plastic case for DIN rail mounting in the control cabinet (indoor use); DIN rail acc. to DIN EN 60715, 35 mm x 7.5 mm x 1 mm
Dimensions (W x H x D)	22.5 mm x 103.6 mm x 101.5 mm (without connection elements)
Weight	Approx. 125 g
Protection type	IP20, acc. to DIN EN 60529
Ambient temperature range	-20 to +55 °C
Storage temperature range	-40 to +70 °C
Resistance to climatic conditions	Relative humidity ≤ 90 % annual average without condensation (climatic class 3K3 acc. to DIN EN 60721-3-3 with extended temperature and humidity range)
Site altitude	Up to 2000 m above sea level
Mechanical ambient conditions[a]	Classification acc. to DIN EN 60721-3-3, table 6, class 3M2

[a] Test conditions are listed in the System Descripton B 705000.8.

JUMO GmbH & Co. KG
Delivery address: Mackenrodtstraße 14, 36039 Fulda, Germany
Postal address: 36035 Fulda, Germany
Phone: +49 661 6003-0
Fax: +49 661 6003-607
e-mail: mail@jumo.net
Internet: www.jumo.net

JUMO Instrument Co. Ltd.
JUMO House
Temple Bank, Riverway
Harlow, Essex CM20 2DY, UK
Phone: +44 1279 635533
Fax: +44 1279 635262
e-mail: sales@jumo.co.uk
Internet: www.jumo.co.uk

JUMO Process Control, Inc.
8 Technology Boulevard
Canastota, NY 13031, USA
Phone: 315-697-JUMO
1-800-554-JUMO
Fax: 315-697-5867
e-mail: info@jumo.us
Internet: www.jumo.us

Approval/approval marks

Approval mark	Testing agency	Certificate/certification number	Inspection basis	Valid for
c UL us	Underwriters Laboratories	E201387	UL 61010-1 (3. Ed.), CAN/CSA-22.2 No. 61010-1 (3. Ed.)	all types
DNV GL	DNV GL	TAA000016N	Class Guideline DNVGL-CG-0339	all types; a power supply unit with DNV GL or GL type approval is required (e.g. type 705090)

JUMO GmbH & Co. KG
Delivery address: Mackenrodtstraße 14, 36039 Fulda, Germany
Postal address: 36035 Fulda, Germany
Phone: +49 661 6003-0
Fax: +49 661 6003-607
e-mail: mail@jumo.net
Internet: www.jumo.net

JUMO Instrument Co. Ltd.
JUMO House
Temple Bank, Riverway
Harlow, Essex CM20 2DY, UK
Phone: +44 1279 635533
Fax: +44 1279 635262
e-mail: sales@jumo.co.uk
Internet: www.jumo.co.uk

JUMO Process Control, Inc.
8 Technology Boulevard
Canastota, NY 13031, USA
Phone: 315-697-JUMO
1-800-554-JUMO
Fax: 315-697-5867
e-mail: info@jumo.us
Internet: www.jumo.us

Display and connection elements

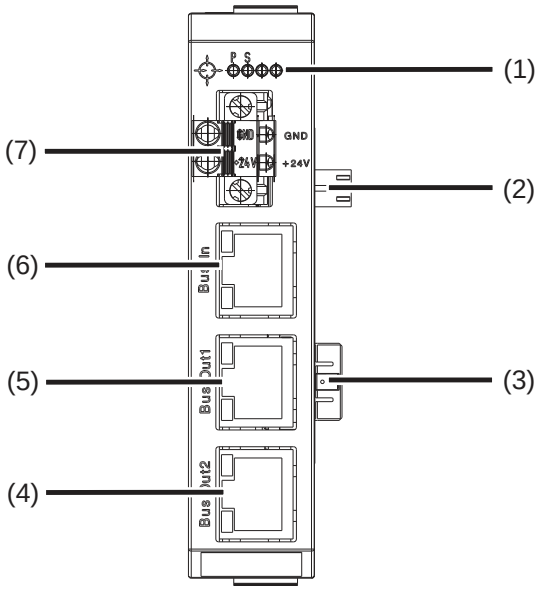

(1) Status displays (LED)
(2) Voltage supply Out, DC 24 V
(3) Side system bus Out
(4) System bus Out2
(5) System bus Out1
(6) System bus In
(7) Voltage supply In, DC 24 V

Electrical isolation

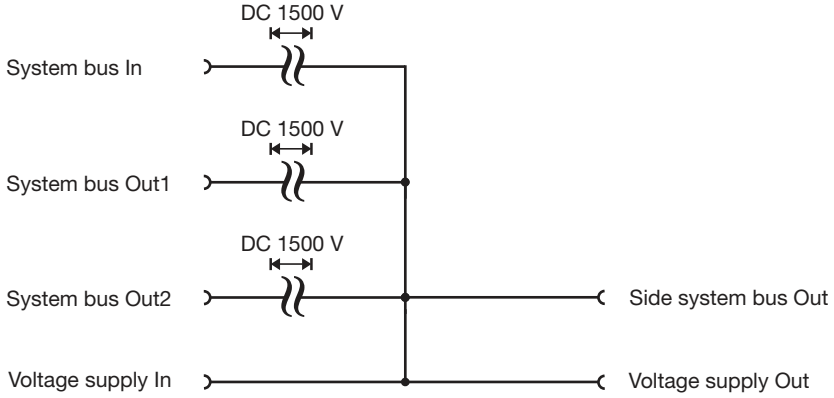

JUMO GmbH & Co. KG
Delivery address: Mackenrodtstraße 14, 36039 Fulda, Germany
Postal address: 36035 Fulda, Germany
Phone: +49 661 6003-0
Fax: +49 661 6003-607
e-mail: mail@jumo.net
Internet: www.jumo.net

JUMO Instrument Co. Ltd.
JUMO House
Temple Bank, Riverway
Harlow, Essex CM20 2DY, UK
Phone: +44 1279 635533
Fax: +44 1279 635262
e-mail: sales@jumo.co.uk
Internet: www.jumo.co.uk

JUMO Process Control, Inc.
8 Technology Boulevard
Canastota, NY 13031, USA
Phone: 315-697-JUMO
1-800-554-JUMO
Fax: 315-697-5867
e-mail: info@jumo.us
Internet: www.jumo.us

Connection diagram

The connection diagram included in the data sheet provides initial information about the connection options. Only use the installation instructions or the operating manual for the electrical connection. The know-how and the correct technical implementation of the safety warnings/instructions contained in these documents are the prerequisite for the installation, electrical connection, and initial start as well as for the safety during operation.

Interfaces

Connection	Designation	Connection element
System bus In (input)	Bus In	 1 TX+ transmit data + 2 TX- transmit data - 3 RX+ receive data + 6 RX- receive data -
System bus Out1 (output)	Bus Out1	 1 TX+ transmit data + 2 TX- transmit data - 3 RX+ receive data + 6 RX- receive data -
System bus Out2 (output)	Bus Out2	 1 TX+ transmit data + 2 TX- transmit data - 3 RX+ receive data + 6 RX- receive data -

Voltage supply

Connection	Terminals	Symbol and terminal designation
DC 24 V	+24V and GND	 +24V U_x - GND

JUMO GmbH & Co. KG
Delivery address: Mackenrodtstraße 14, 36039 Fulda, Germany
Postal address: 36035 Fulda, Germany
Phone: +49 661 6003-0
Fax: +49 661 6003-607
e-mail: mail@jumo.net
Internet: www.jumo.net

JUMO Instrument Co. Ltd.
JUMO House
Temple Bank, Riverway
Harlow, Essex CM20 2DY, UK
Phone: +44 1279 635533
Fax: +44 1279 635262
e-mail: sales@jumo.co.uk
Internet: www.jumo.co.uk

JUMO Process Control, Inc.
8 Technology Boulevard
Canastota, NY 13031, USA
Phone: 315-697-JUMO
1-800-554-JUMO
Fax: 315-697-5867
e-mail: info@jumo.us
Internet: www.jumo.us

Dimensions

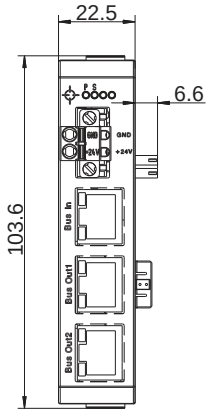

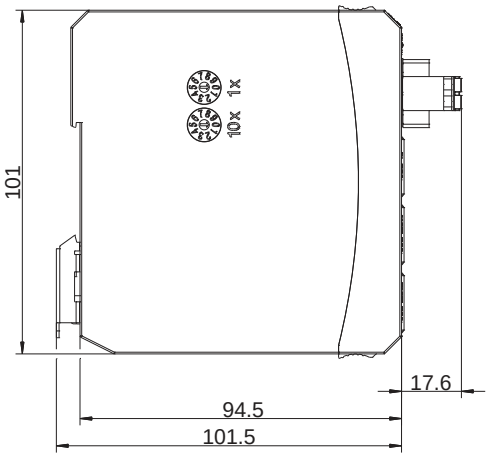

Module overview

Base units

- Central processing unit
  Data sheet 705001

Input/output modules

- Multichannel controller module
  Data sheet 705010
- Relay module 4-channel
  Data sheet 705015
- Analog input module 4-channel
  Data sheet 705020
- Analog input module 8-channel
  Data sheet 705021
- Analog output module 4-channel
  Data sheet 705025
- Digital input/output module 12-channel
  Data sheet 705030
- Thyristor power controller type 70906x
  Data sheet 709061, 709062, 709063

Special modules

- Router module
  Data sheet 705040

Operating, visualization, recording

- Multifunction panel 840
  Data sheet 705060
- Operating panels
  Data sheet 705065

Power supply units

- 705090/05-33
  Data sheet 705090
- 705090/10-33
  Data sheet 705090

JUMO GmbH & Co. KG
Delivery address: Mackenrodtstraße 14, 36039 Fulda, Germany
Postal address: 36035 Fulda, Germany
Phone: +49 661 6003-0
Fax: +49 661 6003-607
e-mail: mail@jumo.net
Internet: www.jumo.net

JUMO Instrument Co. Ltd.
JUMO House
Temple Bank, Riverway
Harlow, Essex CM20 2DY, UK
Phone: +44 1279 635533
Fax: +44 1279 635262
e-mail: sales@jumo.co.uk
Internet: www.jumo.co.uk

JUMO Process Control, Inc.
8 Technology Boulevard
Canastota, NY 13031, USA
Phone: 315-697-JUMO
1-800-554-JUMO
Fax: 315-697-5867
e-mail: info@jumo.us
Internet: www.jumo.us

Order details

	(1)	**Basic type**
705040		Router module
	(2)	**Voltage supply**
36		DC 24 V +25/-20 %
	(3)	**DNV GL approval**
000		Without approval
062		With DNV GL approval[a]

[a] The power supply unit used must also have a DNV GL or GL type approval (e.g. type 705090).

	(1)		(2)		(3)
Order code		/		/	
Order example	705040	/	36	/	000

Scope of delivery

1 router module
1 cover for system bus
2 screw-on end clamps for DIN rail
1 Installation Instructions

General accessories

Description	Part no.
JUMO mTRON T system manual, English	00575577
Setup program with program editor JUMO mTRON T (on MiniDVD), incl. USB cable (A-plug to mini-B-plug, 3 m)	00569494
Program editor JUMO mTRON T (on MiniDVD), incl. USB cable (A-plug to mini-B-plug, 3 m)	00622333
PCA3000/PCC JUMO software package	00431884
PC Evaluation Software PCA3000	00431882
Release automatic print for PC Evaluation Software PCA3000	00505548
PCA Communication Software PCC	00431879
Plant Visualization Software JUMO SVS3000: See data sheet 700755	-
USB cable A-plug mini-B-plug 3 m	00506252

Content of the Mini-DVD:
- Setup program with program editor JUMO mTRON T in case of part no. 00569494
- Program editor JUMO mTRON T in case of part no. 00622333
- CODESYS programming software (free version)
- CODESYS Repository Package - Operating panels (free version)
- GSD file JUMO mTRON T - CPU (free version)
- PC Evaluation Software PCA3000 (30-day trial version)
- PCA Communication Software PCC (30-day trial version)
- Documentation in PDF format

JUMO GmbH & Co. KG
Delivery address: Mackenrodtstraße 14
36039 Fulda, Germany
Postal address: 36035 Fulda, Germany
Phone: +49 661 6003-0
Fax: +49 661 6003-607
Email: mail@jumo.net
Internet: www.jumo.net

JUMO Instrument Co. Ltd.
JUMO House
Temple Bank, Riverway
Harlow, Essex, CM20 2DY, UK
Phone: +44 1279 63 55 33
Fax: +44 1279 62 50 29
Email: sales@jumo.co.uk
Internet: www.jumo.co.uk

JUMO Process Control, Inc.
6733 Myers Road
East Syracuse, NY 13057, USA
Phone: +1 315 437 5866
Fax: +1 315 437 5860
Email: info.us@jumo.net
Internet: www.jumousa.com

Router module 2-port

705041

Brief description

The router module 2-port (705041) is a system component of the JUMO variTRON automation system.

The router module 2-port is mounted on the same DIN rail along with a central processing unit of the JUMO variTRON system and provides 2 system bus outputs on the front. In conjunction with a router module 3-port (705042), which is used as the first module on another DIN rail, the input/output modules of the automation system can be distributed over several DIN rails or control cabinets.

The maximum distance between 2 router modules is 100 m. A maximum of 30 router modules (705041/42) and more than 30 input/output modules (depending on the module) can be used in a system.

LEDs are used to indicate the voltage supply and the operating status of the module.

Configuration of the router module 2-port is not required. It is integrated into the automation system by a setup program.

For service purposes the module insert can be easily pulled out of the case at the front. The case, including the bus board, remains mounted on the DIN rail.

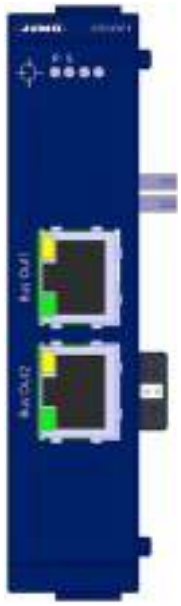

Type 705041

Block diagram

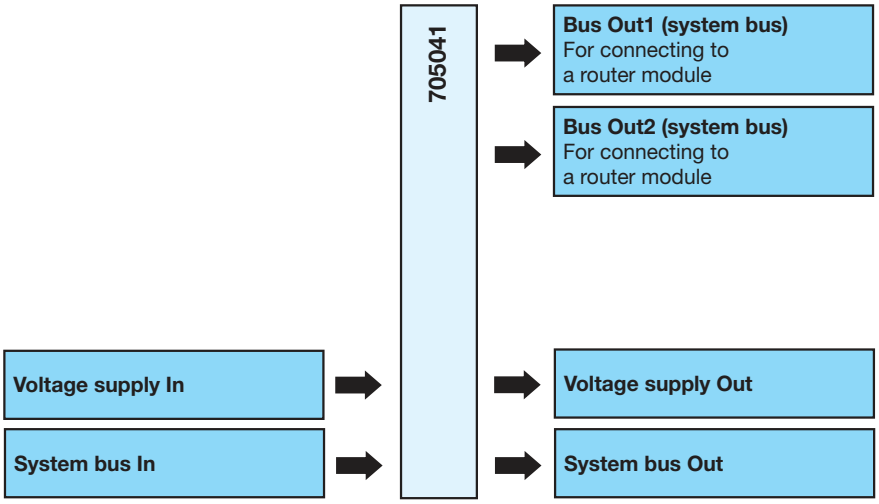

Features

- Compatible with JUMO variTRON as of system version 3
- Decentralized module assignment supported
- Arrangement on DIN rail (lateral system bus input and output)
- System bus expansion via RJ45 sockets on the front (2 × Bus Out)
- Galvanic isolation of the system bus connections
- Quick wiring of operating voltage and system bus provided by simple module connection principle

Approvals and approval marks (see "Technical data")

JUMO GmbH & Co. KG
Delivery address: Mackenrodtstraße 14
36039 Fulda, Germany
Postal address: 36035 Fulda, Germany
Phone: +49 661 6003-0
Fax: +49 661 6003-607
Email: mail@jumo.net
Internet: www.jumo.net

JUMO Instrument Co. Ltd.
JUMO House
Temple Bank, Riverway
Harlow, Essex, CM20 2DY, UK
Phone: +44 1279 63 55 33
Fax: +44 1279 62 50 29
Email: sales@jumo.co.uk
Internet: www.jumo.co.uk

JUMO Process Control, Inc.
6733 Myers Road
East Syracuse, NY 13057, USA
Phone: +1 315 437 5866
Fax: +1 315 437 5860
Email: info.us@jumo.net
Internet: www.jumousa.com

Description

Connection example

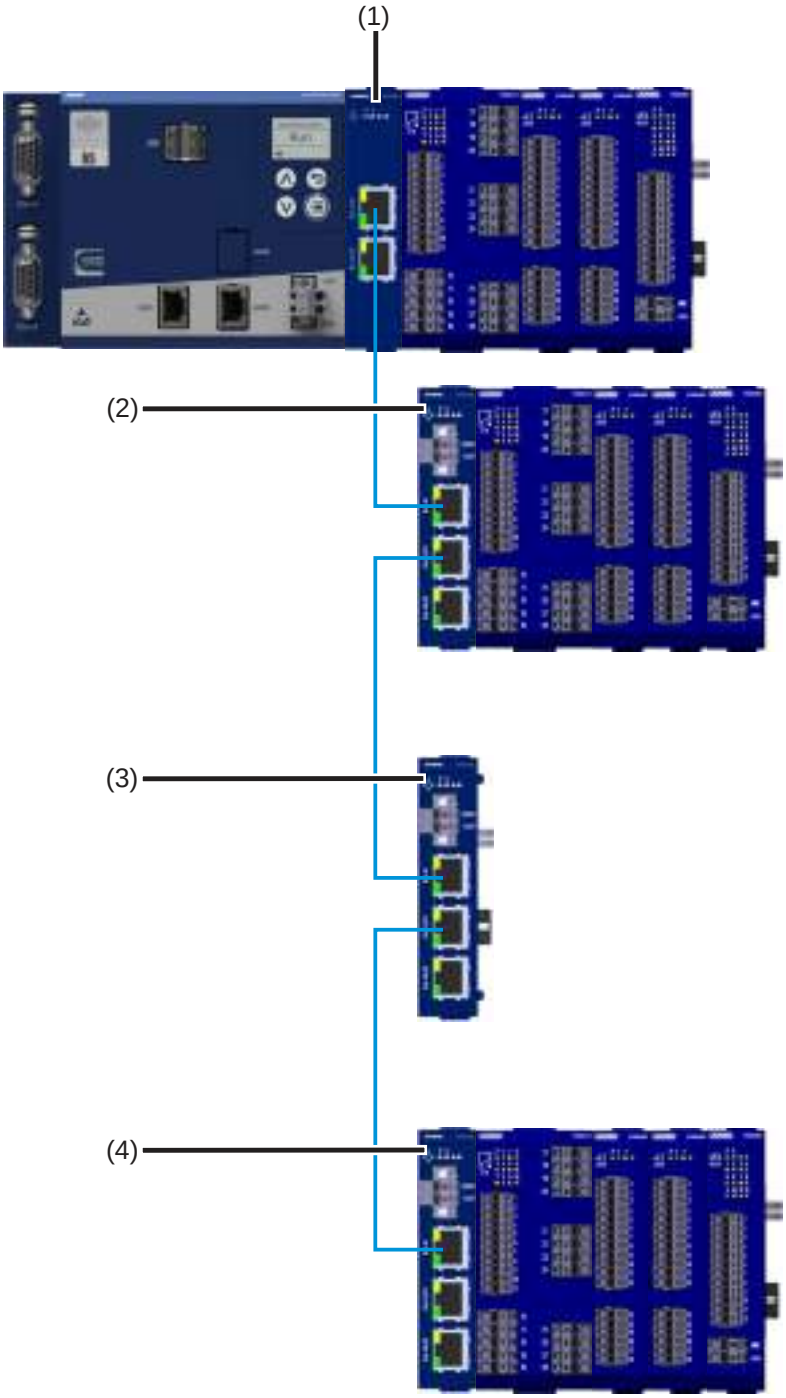

(1) Router module 2-port (705041), attached to JUMO variTRON 500 central processing unit (705002)
(2) Router module 3-port (705042) with downstream modules
(3) Router module 3-port (705042) to increase the range
(4) Router module 3-port (705042) with downstream modules

The router module 2-port (705041) is used on the same DIN rail as the central processing unit and enables system bus networking with standard network cables (see Technical Data). The position of the router module 2-port on the DIN rail is freely selectable.

The router module 3-port (705042) is always used as the first module on a separate DIN rail and is designed for system expansion with additional modules. The router module 3-port can also be used to increase the system bus range.

System bus interconnection is only possible with the router modules of the JUMO variTRON system (closed system); conventional Ethernet switch technology cannot be used.

In the illustrated connection example, the voltage supply of the central processing unit and the modules is not shown (terminals +24 V and GND).

JUMO GmbH & Co. KG
Delivery address: Mackenrodtstraße 14
36039 Fulda, Germany
Postal address: 36035 Fulda, Germany
Phone: +49 661 6003-0
Fax: +49 661 6003-607
Email: mail@jumo.net
Internet: www.jumo.net

JUMO Instrument Co. Ltd.
JUMO House
Temple Bank, Riverway
Harlow, Essex, CM20 2DY, UK
Phone: +44 1279 63 55 33
Fax: +44 1279 62 50 29
Email: sales@jumo.co.uk
Internet: www.jumo.co.uk

JUMO Process Control, Inc.
6733 Myers Road
East Syracuse, NY 13057, USA
Phone: +1 315 437 5866
Fax: +1 315 437 5860
Email: info.us@jumo.net
Internet: www.jumousa.com

Technical data

Interfaces

System bus (input, lateral)	
Description	None (side plug connector)
Type	System specific
Number	1
Application	Connection to the central processing unit or an input/output module
System bus (output, lateral)	
Description	None (side plug connector)
Type	System specific
Number	1
Application	Connection to an input/output module
System bus (output, front side)	
Description	Bus Out1, Bus Out2
Type	RJ45
Number	2
Connecting cable	Network cable (patch or crossover cable), at least CAT5 (S/FTP)
Application	Connection with router modules of the JUMO variTRON automation system

Electrical data

Voltage supply	
Connection	Lateral (supply via central processing unit or router module)
Voltage	DC 24 V +25/-20 % SELV
Residual ripple	5 %
Current consumption	70 mA (at DC 19.2 V)
Power consumption	1.5 W
Electrical safety	According to DIN EN 61010-1 Overvoltage category III, pollution degree 2
Protection rating	III
Electromagnetic compatibility	Acc. to DIN EN 61326-1
Interference emission	Class A – only for industrial use –
Interference immunity	Industrial requirement

JUMO GmbH & Co. KG
Delivery address: Mackenrodtstraße 14
36039 Fulda, Germany
Postal address: 36035 Fulda, Germany
Phone: +49 661 6003-0
Fax: +49 661 6003-607
Email: mail@jumo.net
Internet: www.jumo.net

JUMO Instrument Co. Ltd.
JUMO House
Temple Bank, Riverway
Harlow, Essex, CM20 2DY, UK
Phone: +44 1279 63 55 33
Fax: +44 1279 62 50 29
Email: sales@jumo.co.uk
Internet: www.jumo.co.uk

JUMO Process Control, Inc.
6733 Myers Road
East Syracuse, NY 13057, USA
Phone: +1 315 437 5866
Fax: +1 315 437 5860
Email: info.us@jumo.net
Internet: www.jumousa.com

Housing and environmental conditions

Case type	Plastic case for DIN rail mounting in the control cabinet (indoor use); DIN rail acc. to DIN EN 60715, 35 mm × 7.5 mm × 1 mm
Dimensions (W × H × D)	22.5 mm × 103.6 mm × 101.5 mm (without connection elements)
Weight	Approx. 130 g
Protection type	IP20, according to DIN EN 60529
Ambient temperature range	-20 to +55 °C
Storage temperature range	-40 to +70 °C
Resistance to climatic conditions	Relative humidity ≤ 90 % annual average without condensation (climate class 3K3 acc. to DIN EN 60721-3-3 with extended temperature and humidity range)
Site altitude	Up to 2000 m above sea level
Vibration	Acc. to DIN EN 60068-2-6, table C.2
Amplitude	0.15 mm from 10 to 58.1 Hz
Acceleration	20 m/s^2 from 58.1 to 150 Hz
Shock	Acc. to DIN EN 60068-2-27, table A.1
Peak acceleration	150 m/s^2
Shock duration	11 ms

Approvals and approval marks

Approval mark	Test facility	Certificate/certification number	Inspection basis	Valid for
c UL us	Underwriters Laboratories	E201387	UL 61010-1 (3. Ed.), CAN/CSA-22.2 No. 61010-1 (3. Ed.)	All types

JUMO GmbH & Co. KG
Delivery address: Mackenrodtstraße 14
36039 Fulda, Germany
Postal address: 36035 Fulda, Germany
Phone: +49 661 6003-0
Fax: +49 661 6003-607
Email: mail@jumo.net
Internet: www.jumo.net

JUMO Instrument Co. Ltd.
JUMO House
Temple Bank, Riverway
Harlow, Essex, CM20 2DY, UK
Phone: +44 1279 63 55 33
Fax: +44 1279 62 50 29
Email: sales@jumo.co.uk
Internet: www.jumo.co.uk

JUMO Process Control, Inc.
6733 Myers Road
East Syracuse, NY 13057, USA
Phone: +1 315 437 5866
Fax: +1 315 437 5860
Email: info.us@jumo.net
Internet: www.jumousa.com

Connection diagram

The connection diagram in the data sheet provides preliminary information about the connection options. For the electrical connection, only use the installation instructions or the operating manual. The knowledge and the correct technical compliance with the safety information and warnings contained in these documents are mandatory for mounting, electrical connection, and startup as well as for safety during operation.

Interfaces

Connection	Description	Connection element	Assignment	
System bus Out1 (output)	Bus Out1	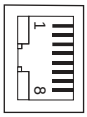	1 TX+	Transmission data +
			2 TX-	Transmission data -
			3 RX+	Received data +
			6 RX-	Received data -
System bus Out2 (output)	Bus Out2	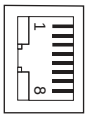	1 TX+	Transmission data +
			2 TX-	Transmission data -
			3 RX+	Received data +
			6 RX-	Received data -

JUMO GmbH & Co. KG
Delivery address: Mackenrodtstraße 14
36039 Fulda, Germany
Postal address: 36035 Fulda, Germany
Phone: +49 661 6003-0
Fax: +49 661 6003-607
Email: mail@jumo.net
Internet: www.jumo.net

JUMO Instrument Co. Ltd.
JUMO House
Temple Bank, Riverway
Harlow, Essex, CM20 2DY, UK
Phone: +44 1279 63 55 33
Fax: +44 1279 62 50 29
Email: sales@jumo.co.uk
Internet: www.jumo.co.uk

JUMO Process Control, Inc.
6733 Myers Road
East Syracuse, NY 13057, USA
Phone: +1 315 437 5866
Fax: +1 315 437 5860
Email: info.us@jumo.net
Internet: www.jumousa.com

Display and connection elements

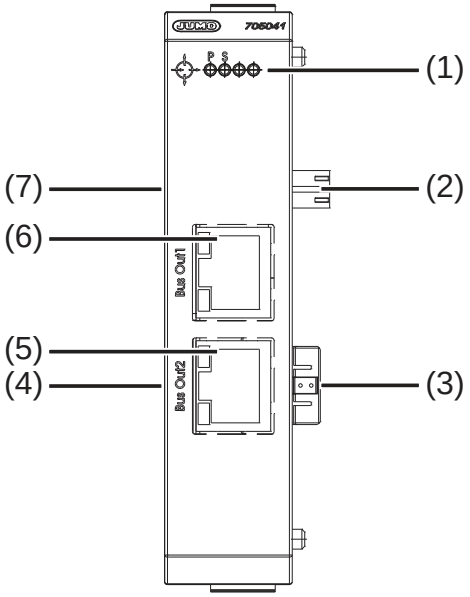

(1) Status displays (LED):
P = Voltage supply
S = Status
(2) Voltage supply Out, DC 24 V
(3) Side system bus Out (output)
(4) Side system bus In (input)
(5) System bus Out2 (output)
(6) System bus Out1 (output)
(7) Voltage supply In, DC 24 V

Electrical isolation

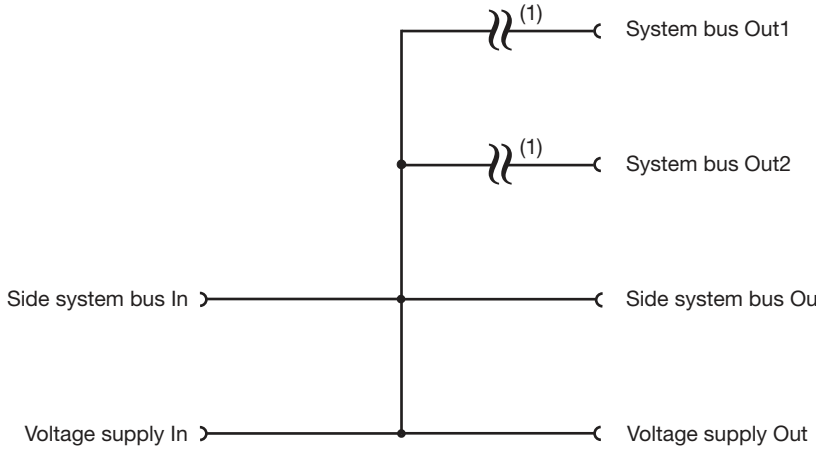

(1) Functional galvanic isolation for connection of SELV or PELV electrical circuits.

JUMO GmbH & Co. KG
Delivery address: Mackenrodtstraße 14
36039 Fulda, Germany
Postal address: 36035 Fulda, Germany
Phone: +49 661 6003-0
Fax: +49 661 6003-607
Email: mail@jumo.net
Internet: www.jumo.net

JUMO Instrument Co. Ltd.
JUMO House
Temple Bank, Riverway
Harlow, Essex, CM20 2DY, UK
Phone: +44 1279 63 55 33
Fax: +44 1279 62 50 29
Email: sales@jumo.co.uk
Internet: www.jumo.co.uk

JUMO Process Control, Inc.
6733 Myers Road
East Syracuse, NY 13057, USA
Phone: +1 315 437 5866
Fax: +1 315 437 5860
Email: info.us@jumo.net
Internet: www.jumousa.com

Dimensions

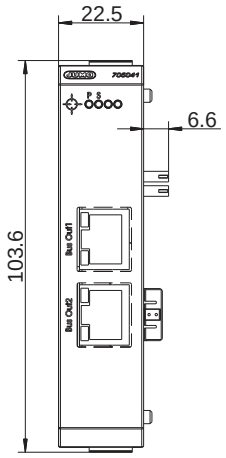

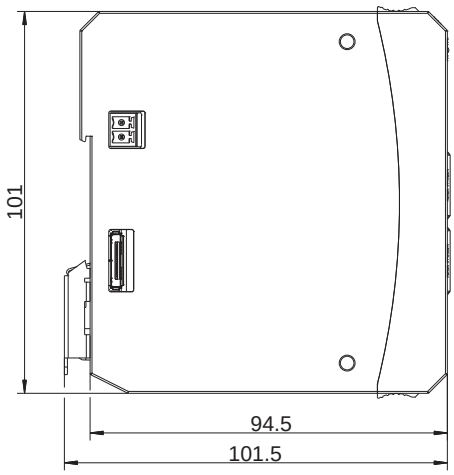

Compatibility

JUMO variTRON

See data sheet of the relevant central processing unit JUMO variTRON:
Data sheet 70500x

JUMO GmbH & Co. KG
Delivery address: Mackenrodtstraße 14
36039 Fulda, Germany
Postal address: 36035 Fulda, Germany
Phone: +49 661 6003-0
Fax: +49 661 6003-607
Email: mail@jumo.net
Internet: www.jumo.net

JUMO Instrument Co. Ltd.
JUMO House
Temple Bank, Riverway
Harlow, Essex, CM20 2DY, UK
Phone: +44 1279 63 55 33
Fax: +44 1279 62 50 29
Email: sales@jumo.co.uk
Internet: www.jumo.co.uk

JUMO Process Control, Inc.
6733 Myers Road
East Syracuse, NY 13057, USA
Phone: +1 315 437 5866
Fax: +1 315 437 5860
Email: info.us@jumo.net
Internet: www.jumousa.com

Order details

	(1)	**Basic type**
705041		Router module 2-port
	(2)	**Voltage supply**
36		DC 24 V +25/-20 %, SELV
	(3)	**DNV GL approval**
000		Without approval

	(1)		(2)		(3)
Order code	705041	/	36	/	000
Order example	705041	/	36	/	000

Scope of delivery

1 router module 2-port
1 installation instructions

JUMO GmbH & Co. KG
Delivery address: Mackenrodtstraße 14
36039 Fulda, Germany
Postal address: 36035 Fulda, Germany
Phone: +49 661 6003-0
Fax: +49 661 6003-607
Email: mail@jumo.net
Internet: www.jumo.net

JUMO Instrument Co. Ltd.
JUMO House
Temple Bank, Riverway
Harlow, Essex, CM20 2DY, UK
Phone: +44 1279 63 55 33
Fax: +44 1279 62 50 29
Email: sales@jumo.co.uk
Internet: www.jumo.co.uk

JUMO Process Control, Inc.
6733 Myers Road
East Syracuse, NY 13057, USA
Phone: +1 315 437 5866
Fax: +1 315 437 5860
Email: info.us@jumo.net
Internet: www.jumousa.com

Router module 3-port

705042

Brief description

The router module 3-port (705042) is a system component of the JUMO variTRON automation system.

The router module 3-port is the first module to be mounted on a separate DIN rail and provides a system bus input and 2 outputs on the front. In conjunction with a router module 2-port (705041) and, if necessary, additional router modules 3-port, the input/output modules of the automation system can be distributed over several DIN rails or control cabinets.

The maximum distance between 2 router modules is 100 m. A maximum of 30 router modules (705041/42) and more than 30 input/output modules (depending on the module) can be used in a system.

LEDs are used to indicate the voltage supply and the operating status of the module. The electrical connection of the voltage supply for the router module is made on the front via a removable terminal strip.

Configuration of the router module 3-port is not required. It is integrated into the automation system by a setup program.

For service purposes the module insert can be easily pulled out of the case at the front. The case, including the bus board, remains mounted on the DIN rail.

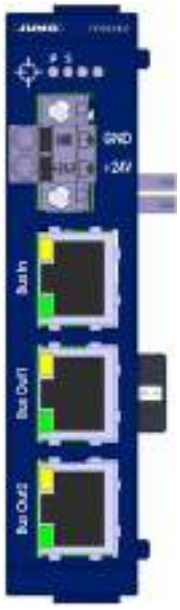

Type 705042

Block diagram

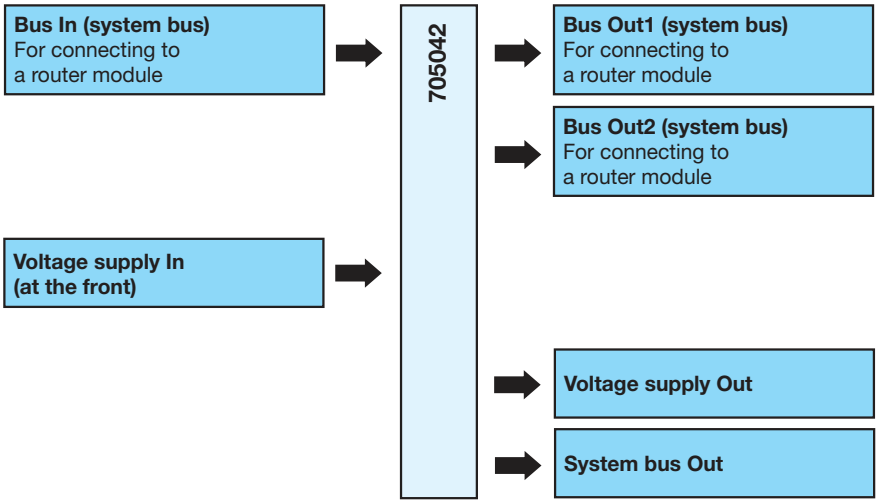

Features

- Compatible with JUMO variTRON as of system version 3
- Decentralized module assignment supported
- First module on an additional DIN rail for connecting further modules
- System bus expansion via RJ45 sockets on the front (1 × Bus In, 2 × Bus Out)
- Galvanic isolation of the system bus connections
- Supply of operating voltage
- Quick wiring of operating voltage and system bus provided by simple module connection principle

Approvals and approval marks (see "Technical data")

JUMO GmbH & Co. KG
Delivery address: Mackenrodtstraße 14
36039 Fulda, Germany
Postal address: 36035 Fulda, Germany
Phone: +49 661 6003-0
Fax: +49 661 6003-607
Email: mail@jumo.net
Internet: www.jumo.net

JUMO Instrument Co. Ltd.
JUMO House
Temple Bank, Riverway
Harlow, Essex, CM20 2DY, UK
Phone: +44 1279 63 55 33
Fax: +44 1279 62 50 29
Email: sales@jumo.co.uk
Internet: www.jumo.co.uk

JUMO Process Control, Inc.
6733 Myers Road
East Syracuse, NY 13057, USA
Phone: +1 315 437 5866
Fax: +1 315 437 5860
Email: info.us@jumo.net
Internet: www.jumousa.com

Description

Connection example

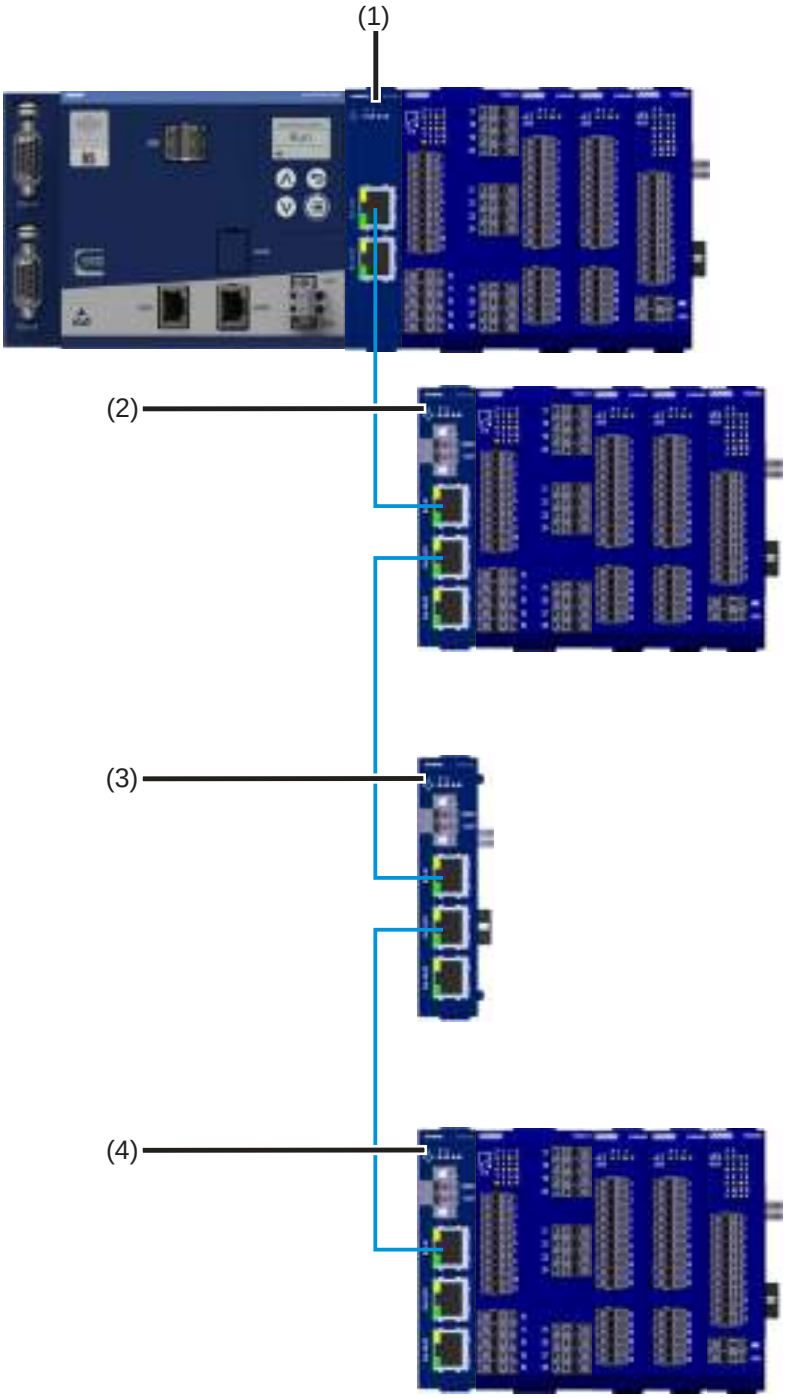

(1) Router module 2-port (705041), attached to JUMO variTRON 500 central processing unit (705002)
(2) Router module 3-port (705042) with downstream modules
(3) Router module 3-port (705042) to increase the range
(4) Router module 3-port (705042) with downstream modules

The router module 2-port (705041) is used on the same DIN rail as the central processing unit and enables system bus networking with standard network cables (see Technical Data). The position of the router module 2-port on the DIN rail is freely selectable.

The router module 3-port (705042) is always used as the first module on a separate DIN rail and is designed for system expansion with additional modules. The router module 3-port can also be used to increase the system bus range.

System bus interconnection is only possible with the router modules of the JUMO variTRON system (closed system); conventional Ethernet switch technology cannot be used.

In the illustrated connection example, the voltage supply of the central processing unit and the modules is not shown (terminals +24 V and GND).

JUMO GmbH & Co. KG
Delivery address: Mackenrodtstraße 14
36039 Fulda, Germany
Postal address: 36035 Fulda, Germany
Phone: +49 661 6003-0
Fax: +49 661 6003-607
Email: mail@jumo.net
Internet: www.jumo.net

JUMO Instrument Co. Ltd.
JUMO House
Temple Bank, Riverway
Harlow, Essex, CM20 2DY, UK
Phone: +44 1279 63 55 33
Fax: +44 1279 62 50 29
Email: sales@jumo.co.uk
Internet: www.jumo.co.uk

JUMO Process Control, Inc.
6733 Myers Road
East Syracuse, NY 13057, USA
Phone: +1 315 437 5866
Fax: +1 315 437 5860
Email: info.us@jumo.net
Internet: www.jumousa.com

Technical data

Interfaces

System bus (output, lateral)	
Description	None (side plug connector)
Type	System specific
Number	1
Application	Connection to an input/output module
System bus (input, front side)	
Description	Bus In
Type	RJ45
Number	1
Connecting cable	Network cable (patch or crossover cable), at least CAT5 (S/FTP)
Application	Connection with a router module 705041 (on the same DIN rail as the central processing unit) or 705042 (on separate DIN rail)
System bus (output, front side)	
Description	Bus Out1, Bus Out2
Type	RJ45
Number	2
Connecting cable	Network cable (patch or crossover cable), at least CAT5 (S/FTP)
Application	Connection with router modules of the JUMO variTRON automation system

Electrical data

Voltage supply	
Connection	At the front (removable terminal strip, 2-pole with Push In technology)
Voltage	DC 24 V +25/-20 % SELV
Residual ripple	5 %
Current consumption	100 mA (at DC 19.2 V) Current consumption of lined-up modules also has to be considered!
Power consumption	2 W
Conductor cross section on terminals GND and +24 V	
Wire or stranded wire without ferrule	Min. 1.5 mm^2, max. 2.5 mm^2
Stranded wire with ferrule	Min. 1.5 mm^2, max. 2.5 mm^2
2 × stranded wire with twin ferrule with plastic collar	1.5 mm^2
Stripping length on terminals GND and +24 V	10 mm
Electrical safety	According to DIN EN 61010-1 Overvoltage category III, pollution degree 2
Protection rating	III
Electromagnetic compatibility	Acc. to DIN EN 61326-1
Interference emission	Class A – only for industrial use –
Interference immunity	Industrial requirement

JUMO GmbH & Co. KG
Delivery address: Mackenrodtstraße 14
36039 Fulda, Germany
Postal address: 36035 Fulda, Germany
Phone: +49 661 6003-0
Fax: +49 661 6003-607
Email: mail@jumo.net
Internet: www.jumo.net

JUMO Instrument Co. Ltd.
JUMO House
Temple Bank, Riverway
Harlow, Essex, CM20 2DY, UK
Phone: +44 1279 63 55 33
Fax: +44 1279 62 50 29
Email: sales@jumo.co.uk
Internet: www.jumo.co.uk

JUMO Process Control, Inc.
6733 Myers Road
East Syracuse, NY 13057, USA
Phone: +1 315 437 5866
Fax: +1 315 437 5860
Email: info.us@jumo.net
Internet: www.jumousa.com

Housing and environmental conditions

Case type	Plastic case for DIN rail mounting in the control cabinet (indoor use); DIN rail acc. to DIN EN 60715, 35 mm × 7.5 mm × 1 mm
Dimensions (W × H × D)	22.5 mm × 103.6 mm × 101.5 mm (without connection elements)
Weight	Approx. 150 g
Protection type	IP20, according to DIN EN 60529
Ambient temperature range	-20 to +55 °C
Storage temperature range	-40 to +70 °C
Resistance to climatic conditions	Relative humidity ≤ 90 % annual average without condensation (climate class 3K3 acc. to DIN EN 60721-3-3 with extended temperature and humidity range)
Site altitude	Up to 2000 m above sea level
Vibration	Acc. to DIN EN 60068-2-6, table C.2
Amplitude	0.15 mm from 10 to 58.1 Hz
Acceleration	20 m/s^2 from 58.1 to 150 Hz
Shock	Acc. to DIN EN 60068-2-27, table A.1
Peak acceleration	150 m/s^2
Shock duration	11 ms

Approvals and approval marks

Approval mark	Test facility	Certificate/certification number	Inspection basis	Valid for
c UL us	Underwriters Laboratories	E201387	UL 61010-1 (3. Ed.), CAN/CSA-22.2 No. 61010-1 (3. Ed.)	All types

JUMO GmbH & Co. KG
Delivery address: Mackenrodtstraße 14
36039 Fulda, Germany
Postal address: 36035 Fulda, Germany
Phone: +49 661 6003-0
Fax: +49 661 6003-607
Email: mail@jumo.net
Internet: www.jumo.net

JUMO Instrument Co. Ltd.
JUMO House
Temple Bank, Riverway
Harlow, Essex, CM20 2DY, UK
Phone: +44 1279 63 55 33
Fax: +44 1279 62 50 29
Email: sales@jumo.co.uk
Internet: www.jumo.co.uk

JUMO Process Control, Inc.
6733 Myers Road
East Syracuse, NY 13057, USA
Phone: +1 315 437 5866
Fax: +1 315 437 5860
Email: info.us@jumo.net
Internet: www.jumousa.com

Connection diagram

The connection diagram in the data sheet provides preliminary information about the connection options. For the electrical connection, only use the installation instructions or the operating manual. The knowledge and the correct technical compliance with the safety information and warnings contained in these documents are mandatory for mounting, electrical connection, and startup as well as for safety during operation.

Interfaces

Connection	Description	Connection element	Assignment	
System bus In (input)	Bus In	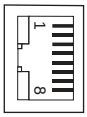	1 TX+	Transmission data +
			2 TX-	Transmission data -
			3 RX+	Received data +
			6 RX-	Received data -
System bus Out1 (output)	Bus Out1	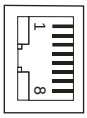	1 TX+	Transmission data +
			2 TX-	Transmission data -
			3 RX+	Received data +
			6 RX-	Received data -
System bus Out2 (output)	Bus Out2	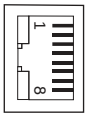	1 TX+	Transmission data +
			2 TX-	Transmission data -
			3 RX+	Received data +
			6 RX-	Received data -

Voltage supply

Connection	Terminals	Symbol and terminal designation
DC 24 V (front)	+24 V and GND	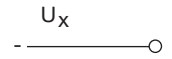

JUMO GmbH & Co. KG
Delivery address: Mackenrodtstraße 14
36039 Fulda, Germany
Postal address: 36035 Fulda, Germany
Phone: +49 661 6003-0
Fax: +49 661 6003-607
Email: mail@jumo.net
Internet: www.jumo.net

JUMO Instrument Co. Ltd.
JUMO House
Temple Bank, Riverway
Harlow, Essex, CM20 2DY, UK
Phone: +44 1279 63 55 33
Fax: +44 1279 62 50 29
Email: sales@jumo.co.uk
Internet: www.jumo.co.uk

JUMO Process Control, Inc.
6733 Myers Road
East Syracuse, NY 13057, USA
Phone: +1 315 437 5866
Fax: +1 315 437 5860
Email: info.us@jumo.net
Internet: www.jumousa.com

Display, operating, and connection elements

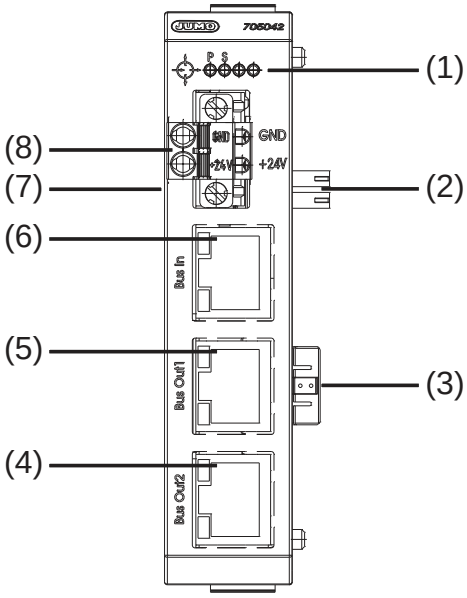

(1) Status displays (LED):
P = Voltage supply
S = Status

(2) Voltage supply Out, DC 24 V

(3) Side system bus Out (output)

(4) System bus Out2 (output)

(5) System bus Out1 (output)

(6) System bus In (input)

(7) 2 rotary coding switches (setting of the alias device address)

(8) Voltage supply In, DC 24 V

Electrical isolation

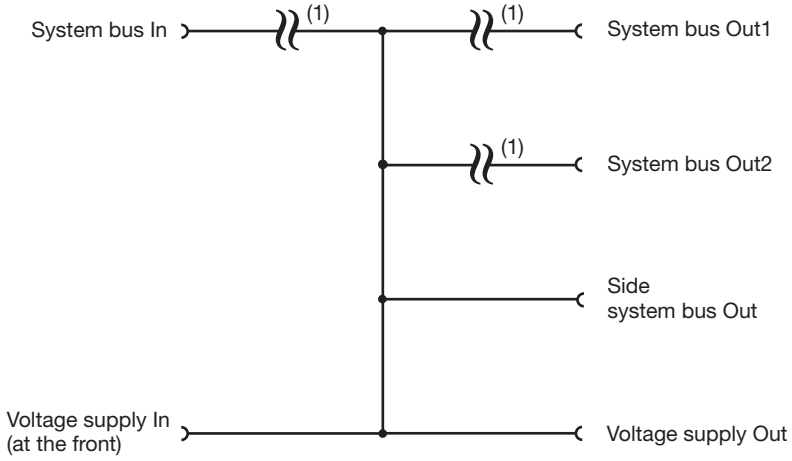

(1) Functional galvanic isolation for connection of SELV or PELV electrical circuits.

JUMO GmbH & Co. KG
Delivery address: Mackenrodtstraße 14
36039 Fulda, Germany
Postal address: 36035 Fulda, Germany
Phone: +49 661 6003-0
Fax: +49 661 6003-607
Email: mail@jumo.net
Internet: www.jumo.net

JUMO Instrument Co. Ltd.
JUMO House
Temple Bank, Riverway
Harlow, Essex, CM20 2DY, UK
Phone: +44 1279 63 55 33
Fax: +44 1279 62 50 29
Email: sales@jumo.co.uk
Internet: www.jumo.co.uk

JUMO Process Control, Inc.
6733 Myers Road
East Syracuse, NY 13057, USA
Phone: +1 315 437 5866
Fax: +1 315 437 5860
Email: info.us@jumo.net
Internet: www.jumousa.com

Dimensions

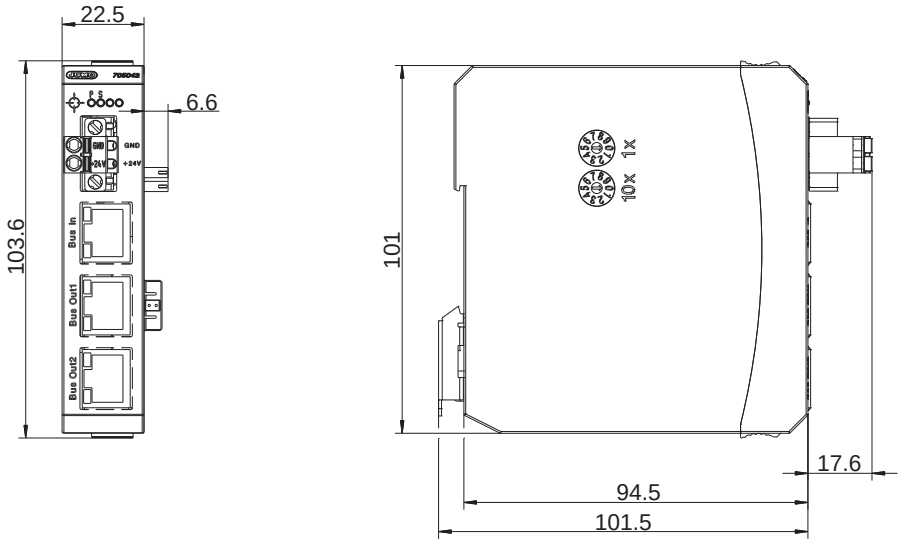

Compatibility

JUMO variTRON

See data sheet of the relevant central processing unit JUMO variTRON:
Data sheet 70500x

JUMO GmbH & Co. KG
Delivery address: Mackenrodtstraße 14
36039 Fulda, Germany
Postal address: 36035 Fulda, Germany
Phone: +49 661 6003-0
Fax: +49 661 6003-607
Email: mail@jumo.net
Internet: www.jumo.net

JUMO Instrument Co. Ltd.
JUMO House
Temple Bank, Riverway
Harlow, Essex, CM20 2DY, UK
Phone: +44 1279 63 55 33
Fax: +44 1279 62 50 29
Email: sales@jumo.co.uk
Internet: www.jumo.co.uk

JUMO Process Control, Inc.
6733 Myers Road
East Syracuse, NY 13057, USA
Phone: +1 315 437 5866
Fax: +1 315 437 5860
Email: info.us@jumo.net
Internet: www.jumousa.com

Order details

	(1)	**Basic type**
705042		Router module 3-port
	(2)	**Voltage supply**
36		DC 24 V +25/-20 %, SELV
	(3)	**DNV GL approval**
000		Without approval

	(1)		(2)		(3)
Order code	705042	/	36	/	000
Order example	705042	/	36	/	000

Scope of delivery

1 router module 3-port
1 cover for system bus
2 screw-on end clamps for DIN rail
1 installation instructions

JUMO GmbH & Co. KG
Delivery address: Mackenrodtstraße 14
36039 Fulda, Germany
Postal address: 36035 Fulda, Germany
Phone: +49 661 6003-0
Fax: +49 661 6003-607
Email: mail@jumo.net
Internet: www.jumo.net

JUMO Instrument Co. Ltd.
JUMO House
Temple Bank, Riverway
Harlow, Essex, CM20 2DY, UK
Phone: +44 1279 63 55 33
Fax: +44 1279 62 50 29
Email: sales@jumo.co.uk
Internet: www.jumo.co.uk

JUMO Process Control, Inc.
6733 Myers Road
East Syracuse, NY 13057, USA
Phone: +1 315 437 5866
Fax: +1 315 437 5860
Email: info.us@jumo.net
Internet: www.jumousa.com

Router module 1-port

705043

Brief description

The router module 1-port (705043) is a system component of the JUMO variTRON automation system.

The router module 1-port is primarily used together with a variTRON 300 (available as of system version x) central processing unit. It laterally provides the system bus output and power supply for connecting the input/output modules. The connection to the central processing unit takes place via an RJ45 patch cable.

In addition, the router module 1-port can be used as the first module on a separate DIN rail. That way, in conjunction with a router module 2-port (705041, on the first DIN rail) or a router module 3-port (705042, on an additional DIN rail), the input/output modules of the automation system can be distributed over several DIN rails or control cabinets.

The maximum distance between 2 router modules (or between central processing unit and router module) is 100 m. A maximum of 30 router modules (705041/42/43) and more than 30 input/output modules (depending on the module) can be used in a system.

LEDs are used to indicate the voltage supply and the operating status of the module. The electrical connection of the voltage supply for the router module is made on the front via a removable terminal strip.

Configuration of the router module 1-port is not required. It is integrated into the automation system by a setup program.

Type 705043

Block diagram

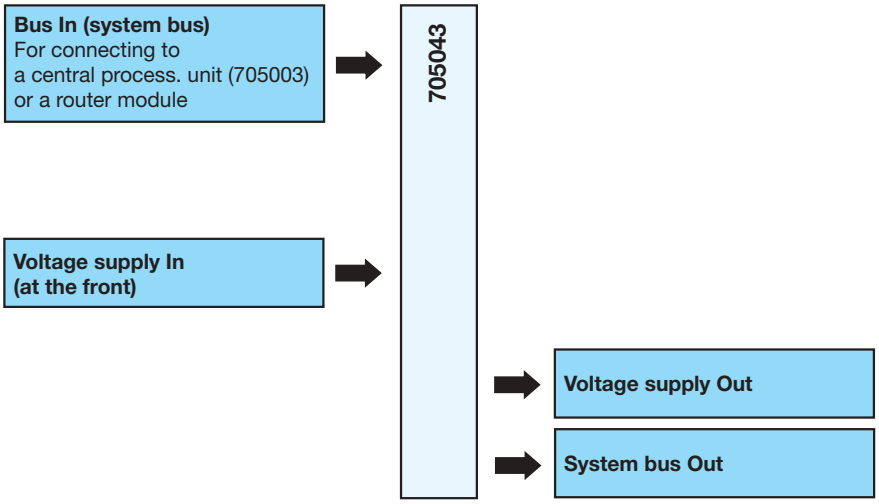

Features

- Compatible with JUMO variTRON as of system version 4
- Connects the variTRON 300 central processing unit (available as of system version x) to the modules
- Alternatively, decentralized module assignment is also supported
- First module on an additional DIN rail for connecting further modules
- Galvanic isolation of the system bus connection
- Supply of operating voltage
- Quick wiring of operating voltage and system bus provided by simple module connection principle

Approvals and approval marks (see "Technical data")

JUMO GmbH & Co. KG
Delivery address: Mackenrodtstraße 14
36039 Fulda, Germany
Postal address: 36035 Fulda, Germany
Phone: +49 661 6003-0
Fax: +49 661 6003-607
Email: mail@jumo.net
Internet: www.jumo.net

JUMO Instrument Co. Ltd.
JUMO House
Temple Bank, Riverway
Harlow, Essex, CM20 2DY, UK
Phone: +44 1279 63 55 33
Fax: +44 1279 62 50 29
Email: sales@jumo.co.uk
Internet: www.jumo.co.uk

JUMO Process Control, Inc.
6733 Myers Road
East Syracuse, NY 13057, USA
Phone: +1 315 437 5866
Fax: +1 315 437 5860
Email: info.us@jumo.net
Internet: www.jumousa.com

Description

Connection example 1

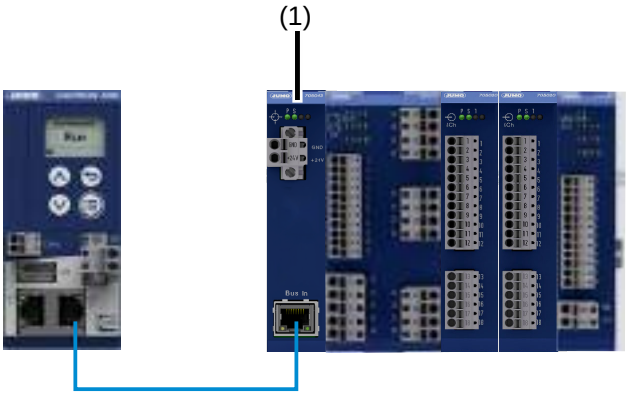

(1) Router module 1-port (705043), connected to JUMO variTRON 300 central processing unit (705003)

Connection example 2

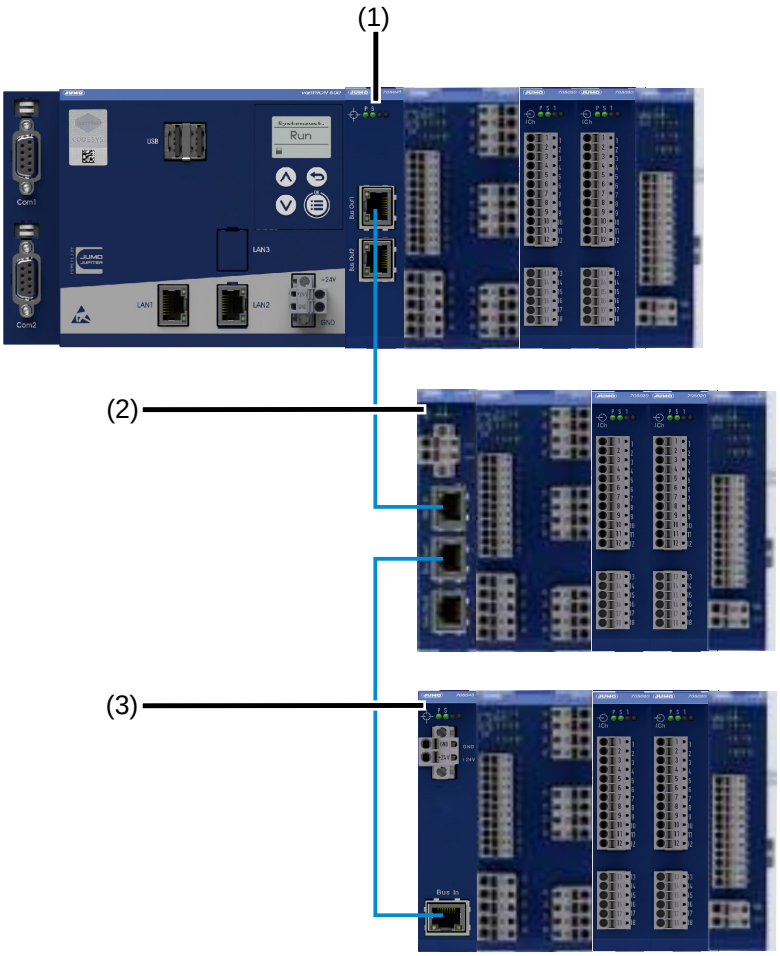

(1) Router module 2-port (705041), attached to JUMO variTRON 500 central processing unit (705002)
(2) Router module 3-port (705042) with downstream modules
(3) Router module 1-port (705043) with downstream modules

The router module 1-port (705043) is mounted on a DIN rail and provides the lateral connections of the system bus and power supply. It is primarily used to connect the input and output modules of the JUMO variTRON automation system to a JUMO variTRON 300 central processing unit (705003; available as of system version x), which itself has no side connections (see connection example 1).

The central processing unit is connected to the router module using a standard network cable (CAT5, S/FTP). The voltage for the router module as well as the connected input and output modules is supplied at the router module. That way, the central processing unit and router module can also be mounted on different DIN rails (cable length max. 100 m).

In addition, the router module 1-port can also be used for decentralized arrangement of further modules on an additional DIN rail. For this purpose, it is connected to a router module 2-port (705041) or a router module 3-port (705042) of the same system (see connection example 2).

System bus interconnection is only possible with the router modules of the JUMO variTRON system (closed system); conventional Ethernet switch technology cannot be used.

In the illustrated connection example, the voltage supply of the central processing unit and the modules is not shown (terminals +24V and GND).

JUMO GmbH & Co. KG
Delivery address: Mackenrodtstraße 14
36039 Fulda, Germany
Postal address: 36035 Fulda, Germany
Phone: +49 661 6003-0
Fax: +49 661 6003-607
Email: mail@jumo.net
Internet: www.jumo.net

JUMO Instrument Co. Ltd.
JUMO House
Temple Bank, Riverway
Harlow, Essex, CM20 2DY, UK
Phone: +44 1279 63 55 33
Fax: +44 1279 62 50 29
Email: sales@jumo.co.uk
Internet: www.jumo.co.uk

JUMO Process Control, Inc.
6733 Myers Road
East Syracuse, NY 13057, USA
Phone: +1 315 437 5866
Fax: +1 315 437 5860
Email: info.us@jumo.net
Internet: www.jumousa.com

Technical data

Interfaces

System bus (input, front side)	
Designation	Bus In
Type	RJ45
Number	1
Connecting cable	Network cable (patch or crossover cable), at least CAT5 (S/FTP)
Application	Connection to a central processing unit 705003 or a router module (705041, 705042)
System bus (output, lateral)	
Designation	None (side plug connector)
Type	System specific
Number	1
Application	Connection to an input/output module

Electrical data

Voltage supply	
Symbol (see nameplate)	⎓
Connection	At the front (removable terminal strip, 2-pole with PUSH IN technology)
Voltage	DC 24 V +25/-20 % SELV
Residual ripple	5 %
Current consumption	30 mA (at DC 19.2 V) Current consumption of lined-up modules also has to be considered!
Power consumption	0.6 W
Conductor cross section on terminals GND and +24 V	
Wire or stranded wire without ferrule	Min. 1.5 mm^2, max. 2.5 mm^2
Stranded wire with ferrule	Min. 1.5 mm^2, max. 2.5 mm^2
2 × stranded wire with twin ferrule with plastic collar	1.5 mm^2
Stripping length on terminals GND and +24 V	10 mm
Electrical safety	According to DIN EN 61010-1 Overvoltage category III, pollution degree 2
Protection rating	III
Electromagnetic compatibility	Acc. to DIN EN 61326-1
Interference emission	Class A – only for industrial use –
Interference immunity	Industrial requirement

JUMO GmbH & Co. KG
Delivery address: Mackenrodtstraße 14
36039 Fulda, Germany
Postal address: 36035 Fulda, Germany
Phone: +49 661 6003-0
Fax: +49 661 6003-607
Email: mail@jumo.net
Internet: www.jumo.net

JUMO Instrument Co. Ltd.
JUMO House
Temple Bank, Riverway
Harlow, Essex, CM20 2DY, UK
Phone: +44 1279 63 55 33
Fax: +44 1279 62 50 29
Email: sales@jumo.co.uk
Internet: www.jumo.co.uk

JUMO Process Control, Inc.
6733 Myers Road
East Syracuse, NY 13057, USA
Phone: +1 315 437 5866
Fax: +1 315 437 5860
Email: info.us@jumo.net
Internet: www.jumousa.com

Housing and environmental conditions

Case type	Plastic case for DIN rail mounting in the control cabinet (indoor use); DIN rail acc. to DIN EN 60715, 35 mm × 7.5 mm × 1 mm
Dimensions (W × H × D)	22.5 mm × 101 mm × 23.9 mm (without connection elements)
Weight	Approx. 42 g
Protection type	IP20, according to DIN EN 60529
Ambient temperature range	-20 to +55 °C
Storage temperature range	-40 to +70 °C
Resistance to climatic conditions	Relative humidity ≤ 90 % annual average without condensation (climate class 3K3 acc. to DIN EN 60721-3-3 with extended temperature and humidity range)
Site altitude	Up to 2000 m above sea level
Vibration	Acc. to DIN EN 60068-2-6, table C.2
Amplitude	0.15 mm from 10 to 58.1 Hz
Acceleration	20 m/s^2 from 58.1 to 150 Hz
Shock	Acc. to DIN EN 60068-2-27, table A.1
Peak acceleration	150 m/s^2
Shock duration	11 ms

Approvals and approval marks

Approval mark	Test facility	Certificate/certification number	Inspection basis	Valid for
c UL us	Underwriters Laboratories	Submitted	UL 61010-1 (3. Ed.), CAN/CSA-22.2 No. 61010-1 (3. Ed.)	All types

JUMO GmbH & Co. KG
Delivery address: Mackenrodtstraße 14
36039 Fulda, Germany
Postal address: 36035 Fulda, Germany
Phone: +49 661 6003-0
Fax: +49 661 6003-607
Email: mail@jumo.net
Internet: www.jumo.net

JUMO Instrument Co. Ltd.
JUMO House
Temple Bank, Riverway
Harlow, Essex, CM20 2DY, UK
Phone: +44 1279 63 55 33
Fax: +44 1279 62 50 29
Email: sales@jumo.co.uk
Internet: www.jumo.co.uk

JUMO Process Control, Inc.
6733 Myers Road
East Syracuse, NY 13057, USA
Phone: +1 315 437 5866
Fax: +1 315 437 5860
Email: info.us@jumo.net
Internet: www.jumousa.com

Connection diagram

The connection diagram in the data sheet provides preliminary information about the connection options. For the electrical connection, only use the installation instructions or the operating manual. The knowledge and the correct technical compliance with the safety information and warnings contained in these documents are mandatory for mounting, electrical connection, and startup as well as for safety during operation.

Interface

Connection	Designation	Connection element	Assignment	
System bus In (input)	Bus In	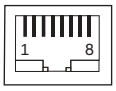	1 TX+	Transmission data +
			2 TX-	Transmission data -
			3 RX+	Received data +
			6 RX-	Received data -

Voltage supply

Connection	Terminals	Symbol and terminal designation
DC 24 V (front)	+24 V and GND	

JUMO GmbH & Co. KG
Delivery address: Mackenrodtstraße 14
36039 Fulda, Germany
Postal address: 36035 Fulda, Germany
Phone: +49 661 6003-0
Fax: +49 661 6003-607
Email: mail@jumo.net
Internet: www.jumo.net

JUMO Instrument Co. Ltd.
JUMO House
Temple Bank, Riverway
Harlow, Essex, CM20 2DY, UK
Phone: +44 1279 63 55 33
Fax: +44 1279 62 50 29
Email: sales@jumo.co.uk
Internet: www.jumo.co.uk

JUMO Process Control, Inc.
6733 Myers Road
East Syracuse, NY 13057, USA
Phone: +1 315 437 5866
Fax: +1 315 437 5860
Email: info.us@jumo.net
Internet: www.jumousa.com

Display, operating, and connection elements

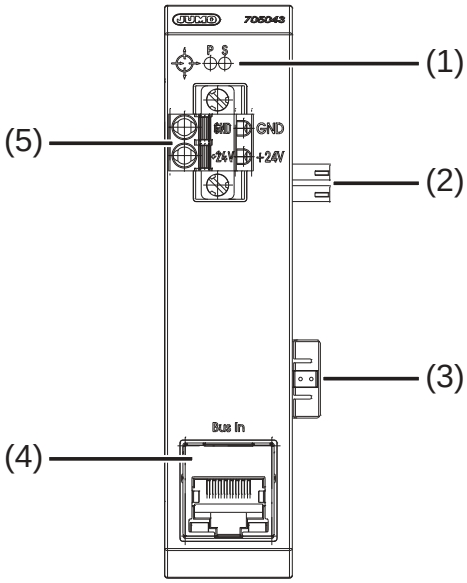

(1) Status displays (LED):
P = Voltage supply
S = Status

(2) Voltage supply Out, DC 24 V

(3) Side system bus Out (output)

(4) System bus In (input)

(5) Voltage supply In, DC 24 V

Electrical isolation

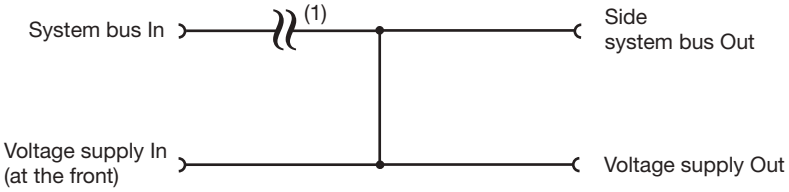

(1) Functional galvanic isolation for connection of SELV or PELV electrical circuits.

JUMO GmbH & Co. KG
Delivery address: Mackenrodtstraße 14
36039 Fulda, Germany
Postal address: 36035 Fulda, Germany
Phone: +49 661 6003-0
Fax: +49 661 6003-607
Email: mail@jumo.net
Internet: www.jumo.net

JUMO Instrument Co. Ltd.
JUMO House
Temple Bank, Riverway
Harlow, Essex, CM20 2DY, UK
Phone: +44 1279 63 55 33
Fax: +44 1279 62 50 29
Email: sales@jumo.co.uk
Internet: www.jumo.co.uk

JUMO Process Control, Inc.
6733 Myers Road
East Syracuse, NY 13057, USA
Phone: +1 315 437 5866
Fax: +1 315 437 5860
Email: info.us@jumo.net
Internet: www.jumousa.com

Dimensions

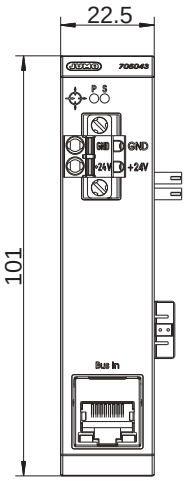

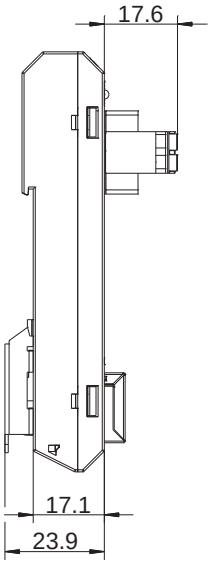

Compatibility

JUMO variTRON

See data sheet of the relevant central processing unit JUMO variTRON:
Data sheet 70500x

JUMO GmbH & Co. KG
Delivery address: Mackenrodtstraße 14
36039 Fulda, Germany
Postal address: 36035 Fulda, Germany
Phone: +49 661 6003-0
Fax: +49 661 6003-607
Email: mail@jumo.net
Internet: www.jumo.net

JUMO Instrument Co. Ltd.
JUMO House
Temple Bank, Riverway
Harlow, Essex, CM20 2DY, UK
Phone: +44 1279 63 55 33
Fax: +44 1279 62 50 29
Email: sales@jumo.co.uk
Internet: www.jumo.co.uk

JUMO Process Control, Inc.
6733 Myers Road
East Syracuse, NY 13057, USA
Phone: +1 315 437 5866
Fax: +1 315 437 5860
Email: info.us@jumo.net
Internet: www.jumousa.com

Order details

	(1)	**Basic type**
705043		Router module 1-port
	(2)	**Voltage supply**
36		DC 24 V +25/-20 %, SELV
	(3)	**DNV GL approved**
000		Without approval

	(1)		(2)		(3)
Order code	705043	/	36	/	000
Order example	705043	/	36	/	000

Scope of delivery

1 router module 1-port
1 cover for system bus
2 screw-on end clamps for DIN rail
1 installation instructions

JUMO GmbH & Co. KG
Delivery address: Mackenrodtstraße 14
36039 Fulda, Germany
Postal address: 36035 Fulda, Germany
Phone: +49 661 6003-0
Fax: +49 661 6003-607
Email: mail@jumo.net
Internet: www.jumo.net

JUMO Instrument Co. Ltd.
JUMO House
Temple Bank, Riverway
Harlow, Essex, CM20 2DY, UK
Phone: +44 1279 63 55 33
Fax: +44 1279 62 50 29
Email: sales@jumo.co.uk
Internet: www.jumo.co.uk

JUMO Process Control, Inc.
6733 Myers Road
East Syracuse, NY 13057, USA
Phone: +1 315 437 5866
Fax: +1 315 437 5860
Email: info.us@jumo.net
Internet: www.jumousa.com

JUMO mTRON T
Measuring, Control, and Automation System

Multifunction panel 840

Brief description

The multifunction panel 840 with TFT-touchscreen allows easy and clearly-arranged measured data visualization, operation, configuration, and parameterization of the system.

The TFT color screen has a screen size of 21.3 cm (8.4“), a resolution of 640 × 480 pixels, 256 colors, and LED backlight.

As the interface between man and machine, the panel allows an optimum and clearly-arranged view of the process status and the system parameters. In addition, it is perfectly suitable for the display and operation of controller screens, process screens, the program editor, and the optional recording function. Setpoint values, batch text, parameters, and configuration data can be directly entered and changed by the user on the screen.

The process data that is transmitted by the system bus is shown in real time. Data archiving and evaluation is made possible by established PC-programs.

In addition to the standard interfaces (LAN, USB), two optional serial interfaces can be connected to a barcode scanner, modem, or other Modbus devices (master, slave).

The user can comfortably configure the multifunctional panel 840 with the setup program. And many functions are also configurable directly on the multifunction panel 840.

Type 705060/...

Block diagram

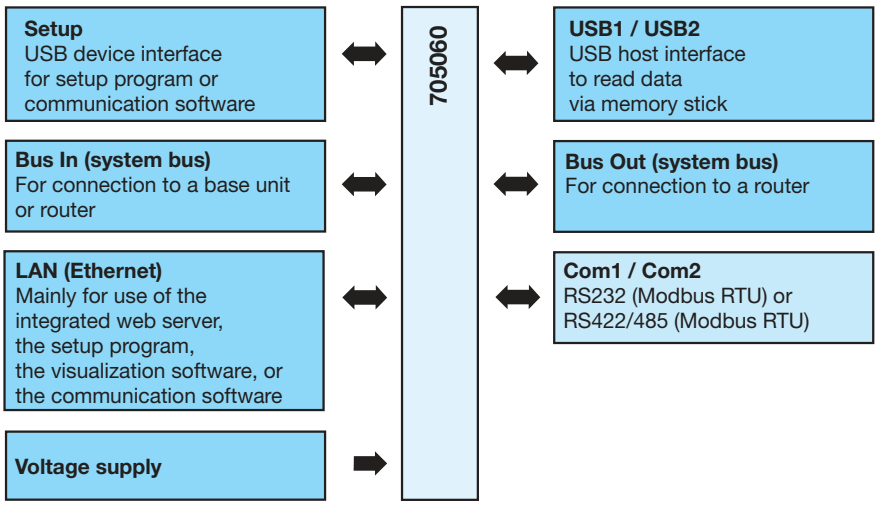

Features

- TFT-touchscreen 21.3 cm (8.4“) with 640 x 480 pixel resolution and 256 colors
- Predefined screen masks for controllers, program generators, and recording functions
- Customized process screens
- User administration
- Configuration of the entire system possible
- Recording function (option)
- Integrated web server
- Ethernet interface
- Three USB interfaces
- Two RJ45 system bus connections (1 x bus In, 1 x bus Out)
- Two serial interfaces (option) as RS232 or RS422/485 for bar code scanner as well as Modbus RTU master/slave
- Sturdy metal case, IP67 protection at the front

Approvals/approval marks (see “Technical data”)

JUMO GmbH & Co. KG
Delivery address: Mackenrodtstraße 14
36039 Fulda, Germany
Postal address: 36035 Fulda, Germany
Phone: +49 661 6003-0
Fax: +49 661 6003-607
Email: mail@jumo.net
Internet: www.jumo.net

JUMO Instrument Co. Ltd.
JUMO House
Temple Bank, Riverway
Harlow, Essex, CM20 2DY, UK
Phone: +44 1279 63 55 33
Fax: +44 1279 62 50 29
Email: sales@jumo.co.uk
Internet: www.jumo.co.uk

JUMO Process Control, Inc.
6733 Myers Road
East Syracuse, NY 13057, USA
Phone: +1 315 437 5866
Fax: +1 315 437 5860
Email: info.us@jumo.net
Internet: www.jumousa.com

Description

The multifunction panel 840 can be used by the user to configure, parameterize, monitor, and operate the measuring, control and automation system. A recording function, as known from the JUMO paperless recorders, is available as an option. The JUMO mTRON T system bus supports one multifunction panel; the prerequisite for using the multifunction panel is an installed central processing unit.

Standard functions

Start screen (e. g. process screen)

- Selectable start screen
- Operation via symbol bar
- Screen switch-off
- User-specific visualizations
- User level

Configuration of the modules

- Online configuration of all input/output modules

Example: Controller module

- Inputs/outputs
- Controller type
- Self-optimization
- Special functions for the plastics processing industry
- Setpoint values
- Limit value monitoring

Visualization of the controller channels

- Up to four controller channels per controller module
- Overview of the active control variables
- Online editing of the setpoint values

Single controller channel

- Overview of the active control variables
- Online editing of the setpoint values
- Manual start of the self-optimization and the manual mode

Controller module

- Overview of the active inputs and outputs
- Overview of the active control variables

Process mask

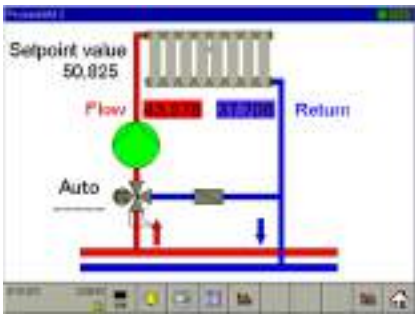

- 18 customer-specific process screens
- Freely configurable display (via setup program) of process values

Batch protocoling

- Simultaneous recording of nine batches
- Toggling between current and completed batch protocols
- Batch texts are readable via interface and bar code scanner (among other methods)

Completed batch protocols

- Graphical data evaluation
- Numerical data evaluation

JUMO GmbH & Co. KG
Delivery address: Mackenrodtstraße 14
36039 Fulda, Germany
Postal address: 36035 Fulda, Germany
Phone: +49 661 6003-0
Fax: +49 661 6003-607
Email: mail@jumo.net
Internet: www.jumo.net

JUMO Instrument Co. Ltd.
JUMO House
Temple Bank, Riverway
Harlow, Essex, CM20 2DY, UK
Phone: +44 1279 63 55 33
Fax: +44 1279 62 50 29
Email: sales@jumo.co.uk
Internet: www.jumo.co.uk

JUMO Process Control, Inc.
6733 Myers Road
East Syracuse, NY 13057, USA
Phone: +1 315 437 5866
Fax: +1 315 437 5860
Email: info.us@jumo.net
Internet: www.jumousa.com

User level

- Important parameters user-specifically summarized in one window
- Less time required for configuration and parameterization

Operator level

- Important visualizations user-specifically summarized in one operator level

Web server

- Integrated web server
- Simultaneous access by several PCs possible
- User-specific pages

Alarm and event lists

- Alarms of the multifunction panel
- Events of the multifunction panel
- Events of the central processing unit

Example: Multifunction panel 840

- Alarm when specific limits are exceeded
- All texts can be adjusted
- Alarms and events batch-related or overall overview

Example: Base unit

- Events of the base unit (central processing unit)
- All texts can be adjusted

Information about the modules

- Overview of the connected modules
- Easy module selection by touching the touchscreen

Example: Analog controller inputs

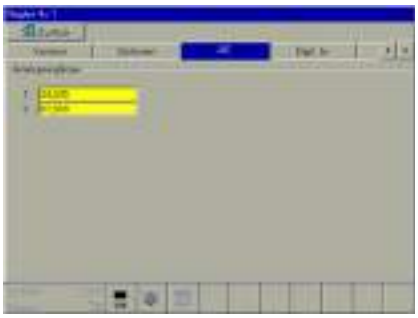

- Overview of a controller module
- All signals, distributed to various tabs

Example: Multifunction panel 840

- Overview of the multifunction panel
- All signals, distributed to various tabs

JUMO GmbH & Co. KG
Delivery address: Mackenrodtstraße 14
36039 Fulda, Germany
Postal address: 36035 Fulda, Germany
Phone: +49 661 6003-0
Fax: +49 661 6003-607
Email: mail@jumo.net
Internet: www.jumo.net

JUMO Instrument Co. Ltd.
JUMO House
Temple Bank, Riverway
Harlow, Essex, CM20 2DY, UK
Phone: +44 1279 63 55 33
Fax: +44 1279 62 50 29
Email: sales@jumo.co.uk
Internet: www.jumo.co.uk

JUMO Process Control, Inc.
6733 Myers Road
East Syracuse, NY 13057, USA
Phone: +1 315 437 5866
Fax: +1 315 437 5860
Email: info.us@jumo.net
Internet: www.jumousa.com

Recording function (option)

Due to the recording function (extra code), the multifunction panel 840 becomes a real paperless recorder, which not only records analog and digital channels but also all controller variables and controller signals. Channels of Modbus slave devices can be integrated into the system and recorded via a Modbus interface and the corresponding Modbus master function.

As of system version 03, analog and digital channels can also be displayed horizontally. The header rows of the vertical presentation (channel name, analog value, switch symbol) are then shown on the right of the analog and digital traces.

Visualization

- Visualization of the data in various diagrams (curves, bargraph, text screen, digital, report, counters/integrators)
- Recording of 54 analog channels, 54 digital channels, 27 counters/integrators
- Summary of the channels in nine groups

Bargraph screen

- Display of the analog channels with scaling and limit values in bargraph form
- Bargraphs change color when limit values are exceeded/undercut

Text screen

- Numerical display of the measured values
- Values change color when limit values are exceeded/undercut
- Enlarged display of one channel along with a bargraph display is possible

Digital image

- ON/OFF display of the digital channels
- As of system version 03 horizontal presentation also possible

Report

- Display of various reports dealing with the analog channels of one group
- Display of minimum, maximum, average/integral value, and time period

Counters / integrators

- Display of up to 27 counters or integrators
- Toggling between individual and overall display
- Display of the current counter reading and the last completed counter reading

Comment

- Input of user-specific comments with on-screen keyboard
- Overview in the event lists of the multifunction panel

History

- Curve representation of all measured data saved in the multifunction panel in different zoom stages
- Display of scaling and limit value marks of a channel
- Numerical display of the analog measured values at the cursor position
- Search function

Horizontal presentation

- Horizontal presentation of analog and digital channels with and without header rows
- Individual configuration for each group
- Available as of system version 03

JUMO GmbH & Co. KG
Delivery address: Mackenrodtstraße 14
36039 Fulda, Germany
Postal address: 36035 Fulda, Germany
Phone: +49 661 6003-0
Fax: +49 661 6003-607
Email: mail@jumo.net
Internet: www.jumo.net

JUMO Instrument Co. Ltd.
JUMO House
Temple Bank, Riverway
Harlow, Essex, CM20 2DY, UK
Phone: +44 1279 63 55 33
Fax: +44 1279 62 50 29
Email: sales@jumo.co.uk
Internet: www.jumo.co.uk

JUMO Process Control, Inc.
6733 Myers Road
East Syracuse, NY 13057, USA
Phone: +1 315 437 5866
Fax: +1 315 437 5860
Email: info.us@jumo.net
Internet: www.jumousa.com

Program generator (option)

The optional nine program generators (extra code of the central processing unit) can be configured and operated by the user via the multifunction panel 840.

Overview of all program generators

- Display of the allocated and free program generators

Operation of the program generators

- Program selection
- Starting/stopping programs
- Activating manual mode

Creating your own programs

- Creating and changing programs with the integrated program editor
- Program preview (as of system version 05; only for central processing unit with extra code 225)

Languages

The multifunction panel is Unicode-enabled and currently supports the following languages:
English, German, French, Russian, Chinese, Italian, Romanian, Czech, Hungarian, Polish, Spanish, Dutch, Danish, Turkish, Portuguese (Brazil)
Additional languages upon request.

JUMO GmbH & Co. KG
Delivery address: Mackenrodtstraße 14
36039 Fulda, Germany
Postal address: 36035 Fulda, Germany
Phone: +49 661 6003-0
Fax: +49 661 6003-607
Email: mail@jumo.net
Internet: www.jumo.net

JUMO Instrument Co. Ltd.
JUMO House
Temple Bank, Riverway
Harlow, Essex, CM20 2DY, UK
Phone: +44 1279 63 55 33
Fax: +44 1279 62 50 29
Email: sales@jumo.co.uk
Internet: www.jumo.co.uk

JUMO Process Control, Inc.
6733 Myers Road
East Syracuse, NY 13057, USA
Phone: +1 315 437 5866
Fax: +1 315 437 5860
Email: info.us@jumo.net
Internet: www.jumousa.com

Technical data

Interfaces

USB device interface	
Connector designation	Setup
Connector type	Mini-B
Number	1
Application	To operate the setup program
Max. current	100 mA
USB host interface	
Connector designation	USB1 and USB2
Connector type	A
Number	2
Application	For reading out data via memory stick
Max. current	100 mA
System bus In	
Connector designation	Bus In
Connector type	RJ45
Number	1
Application	For connection of a base unit or router module
Connection cable	Network cable (patch cable or crossover cable), at least CAT5 (S/FTP)
Cable length	Up to 100 m
System bus Out	
Connector designation	Bus Out
Connector type	RJ45
Number	1
Application	For connection of a router module
Connection cable	Network cable (patch cable or crossover cable), at least CAT5 (S/FTP)
Cable length	Up to 100 m
Ethernet	
Connector designation	LAN
Connector type	RJ45
Number	1
Application	Communication with PC (setup program, data archiving, web server), e-mail server, and Modbus master/slave
Protocols	TCP/IP, HTTP, DHCP, SMTP+POP3, Modbus/TCP
Baud rate	10 Mbit/s, 100 Mbit/s
RS232 or RS422/485 (serial interface)	Depending on the ordered device version
Connector designation	COM1 and COM2
Connector type	D-Sub
Number	2
Application	Communication with Modbus master/slave, connection of a barcode scanner or modem including alarm transmission/message via text message or e-mail
Protocol	Modbus RTU as master/slave, bar code scanner
Baud rate	9600, 19200, 38400
External inputs (external variables)	Via Modbus master/slave functions, 54 analog and 54 digital inputs

JUMO GmbH & Co. KG
Delivery address: Mackenrodtstraße 14
36039 Fulda, Germany
Postal address: 36035 Fulda, Germany
Phone: +49 661 6003-0
Fax: +49 661 6003-607
Email: mail@jumo.net
Internet: www.jumo.net

JUMO Instrument Co. Ltd.
JUMO House
Temple Bank, Riverway
Harlow, Essex, CM20 2DY, UK
Phone: +44 1279 63 55 33
Fax: +44 1279 62 50 29
Email: sales@jumo.co.uk
Internet: www.jumo.co.uk

JUMO Process Control, Inc.
6733 Myers Road
East Syracuse, NY 13057, USA
Phone: +1 315 437 5866
Fax: +1 315 437 5860
Email: info.us@jumo.net
Internet: www.jumousa.com

Screen

Type	Touchscreen TFT color monitor
Size	21.3 cm (8.4”)
Resolution	640 × 480 pixels
Number of colors	256 colors
Frame rate	> 150 Hz
Brightness setting	Adjustable on the device
Screen saver (shutdown)	Via waiting time or control signal

Electrical data

Voltage supply	
Connection	At the case bottom (removable terminal strip, 2-pin with Push-In technology)
Voltage	DC 24 V +25/-20 % SELV
Residual ripple	5 %
Current consumption	Max. 750 mA (at DC 19.2 V)
Power consumption	Max. 15 W
Conductor cross section (voltage supply)	
Wire or strand without ferrule	Min. 0.5 mm^2, max. 2.5 mm^2
Strand with ferrule	Min. 0.5 mm^2, max. 2.5 mm^2
2 x strand with twin ferrule with plastic collar	Min. 0.5 mm^2, max. 1.5 mm^2 (both strands with the same cross section)
Stripping length	10 mm
Electrical safety	Acc. to DIN EN 61010-1 Overvoltage category III, pollution degree 2
Electromagnetic compatibility	Acc. to DIN EN 61326-1
Interference emission	Class A – only for industrial use –
Interference immunity	Industrial requirements

Case and ambient conditions

Case type	Metal case for mounting into a panel cut-out (indoor use); front with decor foil
Dimensions (W × H × D)	235 mm x 195 mm x 58 mm (without connection elements)
Weight (fully equipped)	Approx. 1.8 kg
Protection type	Front IP67, rear IP20, acc. to DIN EN 60529
Ambient temperature range	-20 to +55 °C
Storage temperature range	-30 to +70 °C
Resistance to climatic conditions	Relative humidity ≤ 90 % annual average without condensation (climatic class 3K3 acc. to DIN EN 60721-3-3 with extended temperature and humidity range)
Site altitude	Up to 2000 m above sea level
Mechanical ambient conditions[a]	Vibration test acc. to DIN EN 50178 Shock test acc. to DIN EN 60068-2-27 Drop test acc. to DIN EN 60068-2-32

[a] Test conditions are listed in the System Descripton B 705000.8.

JUMO GmbH & Co. KG
Delivery address: Mackenrodtstraße 14
36039 Fulda, Germany
Postal address: 36035 Fulda, Germany
Phone: +49 661 6003-0
Fax: +49 661 6003-607
Email: mail@jumo.net
Internet: www.jumo.net

JUMO Instrument Co. Ltd.
JUMO House
Temple Bank, Riverway
Harlow, Essex, CM20 2DY, UK
Phone: +44 1279 63 55 33
Fax: +44 1279 62 50 29
Email: sales@jumo.co.uk
Internet: www.jumo.co.uk

JUMO Process Control, Inc.
6733 Myers Road
East Syracuse, NY 13057, USA
Phone: +1 315 437 5866
Fax: +1 315 437 5860
Email: info.us@jumo.net
Internet: www.jumousa.com

Approval/approval marks

Approval mark	Testing agency	Certificate/certification number	Inspection basis	Valid for
c UL us	Underwriters Laboratories	E201387	UL 61010-1 (3. Ed.), CAN/CSA-22.2 No. 61010-1 (3. Ed.)	all types
DNV GL	DNV GL	TAA000016N	Class Guideline DNVGL-CG-0339	all types; a power supply unit with DNV GL or GL type approval is required (e.g. type 705090)

JUMO GmbH & Co. KG
Delivery address: Mackenrodtstraße 14
36039 Fulda, Germany
Postal address: 36035 Fulda, Germany
Phone: +49 661 6003-0
Fax: +49 661 6003-607
Email: mail@jumo.net
Internet: www.jumo.net

JUMO Instrument Co. Ltd.
JUMO House
Temple Bank, Riverway
Harlow, Essex, CM20 2DY, UK
Phone: +44 1279 63 55 33
Fax: +44 1279 62 50 29
Email: sales@jumo.co.uk
Internet: www.jumo.co.uk

JUMO Process Control, Inc.
6733 Myers Road
East Syracuse, NY 13057, USA
Phone: +1 315 437 5866
Fax: +1 315 437 5860
Email: info.us@jumo.net
Internet: www.jumousa.com

Display, operating, and connection elements

(1) Front with decor foil
(2) TFT-touchscreen

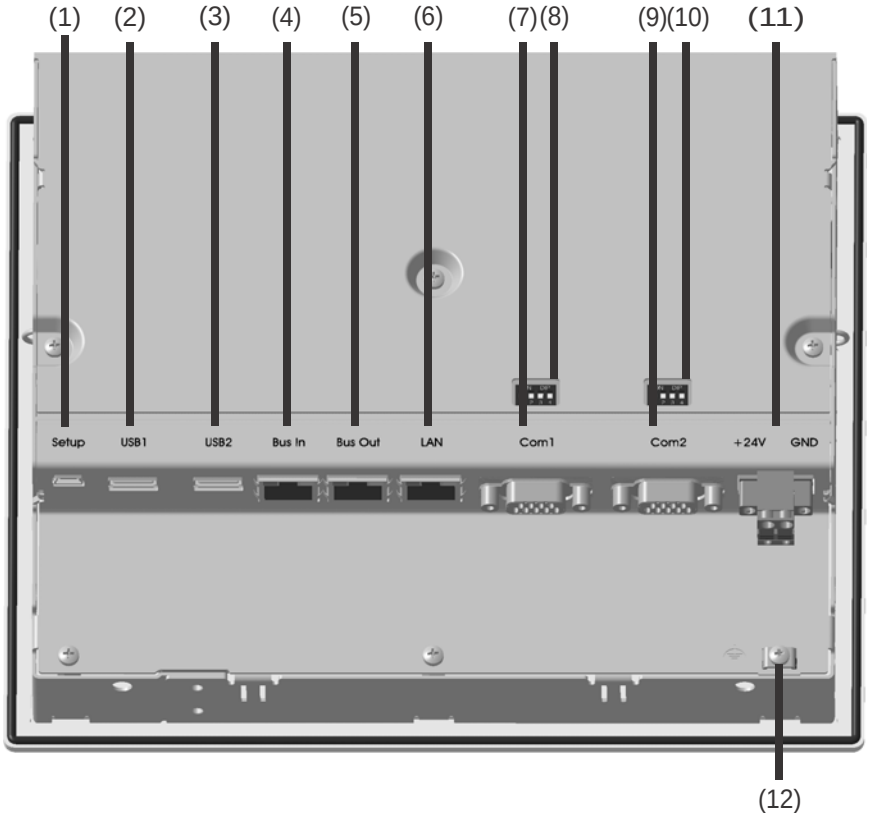

(1) USB device interface (setup)
(2) USB host interface 1
(3) USB host interface 2
(4) System bus In
(5) System bus Out
(6) LAN interface
(7) Interface Com1
(8) Termination resistor Com1
(9) Interface Com2
(10) Termination resistor, Com2
(11) Voltage supply In, DC 24 V
(12) Functional grounding

JUMO GmbH & Co. KG
Delivery address: Mackenrodtstraße 14
36039 Fulda, Germany
Postal address: 36035 Fulda, Germany
Phone: +49 661 6003-0
Fax: +49 661 6003-607
Email: mail@jumo.net
Internet: www.jumo.net

JUMO Instrument Co. Ltd.
JUMO House
Temple Bank, Riverway
Harlow, Essex, CM20 2DY, UK
Phone: +44 1279 63 55 33
Fax: +44 1279 62 50 29
Email: sales@jumo.co.uk
Internet: www.jumo.co.uk

JUMO Process Control, Inc.
6733 Myers Road
East Syracuse, NY 13057, USA
Phone: +1 315 437 5866
Fax: +1 315 437 5860
Email: info.us@jumo.net
Internet: www.jumousa.com

Electrical isolation

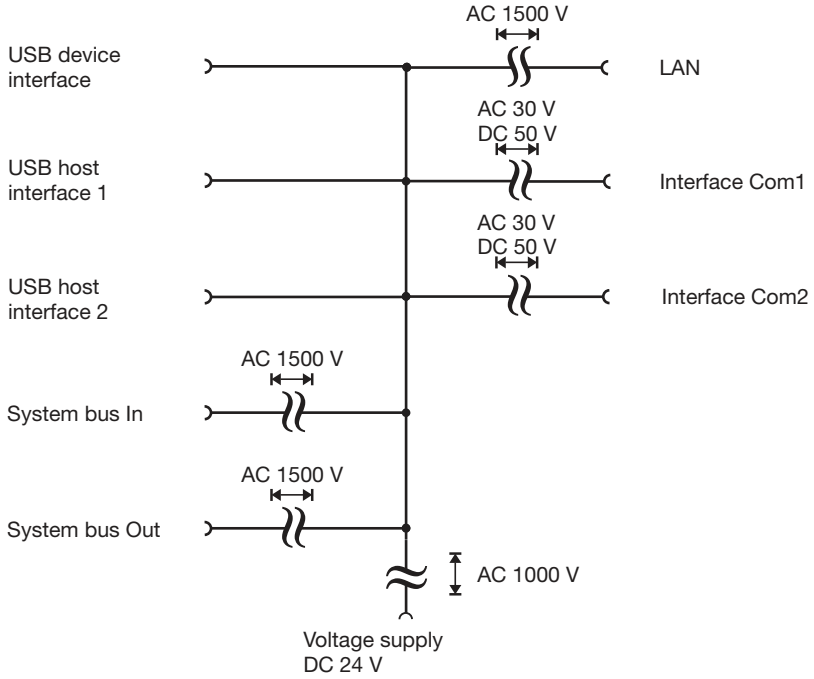

JUMO GmbH & Co. KG
Delivery address: Mackenrodtstraße 14
36039 Fulda, Germany
Postal address: 36035 Fulda, Germany
Phone: +49 661 6003-0
Fax: +49 661 6003-607
Email: mail@jumo.net
Internet: www.jumo.net

JUMO Instrument Co. Ltd.
JUMO House
Temple Bank, Riverway
Harlow, Essex, CM20 2DY, UK
Phone: +44 1279 63 55 33
Fax: +44 1279 62 50 29
Email: sales@jumo.co.uk
Internet: www.jumo.co.uk

JUMO Process Control, Inc.
6733 Myers Road
East Syracuse, NY 13057, USA
Phone: +1 315 437 5866
Fax: +1 315 437 5860
Email: info.us@jumo.net
Internet: www.jumousa.com

Connection diagram

The connection diagram included in the data sheet provides initial information about the connection options. Only use the installation instructions or the operating manual for the electrical connection. The know-how and the correct technical implementation of the safety warnings/instructions contained in these documents are the prerequisite for the installation, electrical connection, and initial start as well as for the safety during operation.

Interfaces

Connection	Designation	Connection element		
USB device	Setup			
USB host	USB1, USB2			
System bus In, System bus Out	Bus In, Bus Out		1 TX+ 2 TX- 3 RX+ 6 RX-	Transmit data + Transmit data - Receive data + Receive data -
Ethernet	LAN		1 TX+ 2 TX- 3 RX+ 6 RX-	Transmit data + Transmit data - Receive data + Receive data -
Serial interface (RS232), optional	Com1, Com2	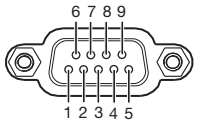	2 RxD 3 TxD 5 GND	Receive data Transmit data Ground
Serial interface (RS422), optional	Com1, Com2	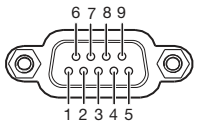	3 TxD+ 4 RxD+ 5 GND 8 TxD- 9 RxD-	Transmit data + Receive data + Ground Transmit data - Receive data -
Serial interface (RS485), optional	Com1, Com2	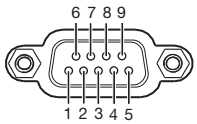	3 TxD+/RxD+ 5 GND 8 TxD-/RxD-	Transmit/receive data + Ground Transmit/receive data -

Voltage supply

Connection	Terminals	Symbol and terminal designation	
24 V DC	+24 V and GND		+24 V GND

JUMO GmbH & Co. KG
Delivery address: Mackenrodtstraße 14
36039 Fulda, Germany
Postal address: 36035 Fulda, Germany
Phone: +49 661 6003-0
Fax: +49 661 6003-607
Email: mail@jumo.net
Internet: www.jumo.net

JUMO Instrument Co. Ltd.
JUMO House
Temple Bank, Riverway
Harlow, Essex, CM20 2DY, UK
Phone: +44 1279 63 55 33
Fax: +44 1279 62 50 29
Email: sales@jumo.co.uk
Internet: www.jumo.co.uk

JUMO Process Control, Inc.
6733 Myers Road
East Syracuse, NY 13057, USA
Phone: +1 315 437 5866
Fax: +1 315 437 5860
Email: info.us@jumo.net
Internet: www.jumousa.com

Dimensions

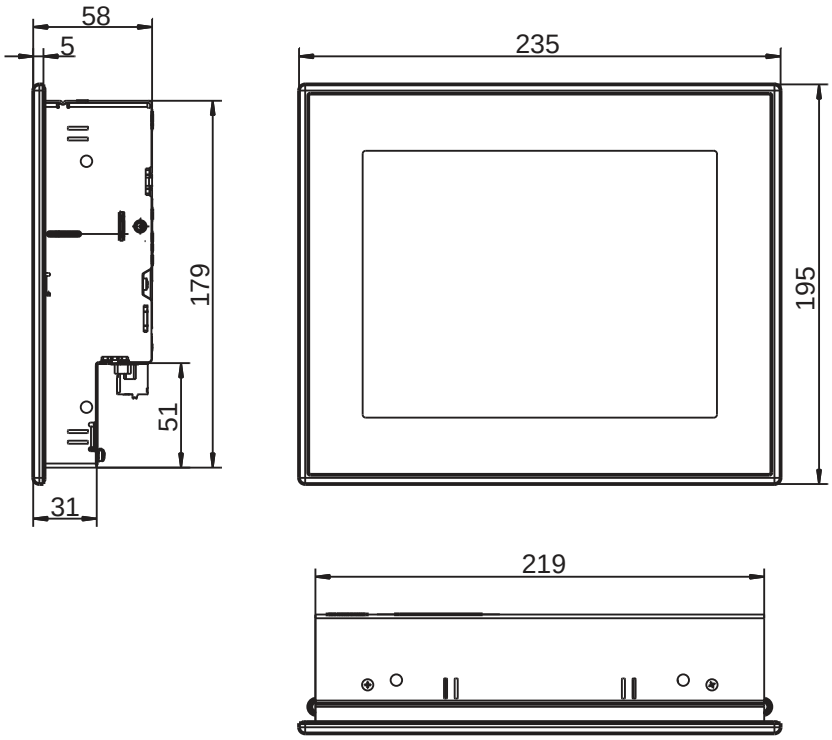

Module overview

Base units

- Central processing unit
  Data sheet 705001

Input/output modules

- Multichannel controller module
  Data sheet 705010
- Relay module 4-channel
  Data sheet 705015
- Analog input module 4-channel
  Data sheet 705020
- Analog input module 8-channel
  Data sheet 705021
- Analog output module 4-channel
  Data sheet 705025
- Digital input/output module 12-channel
  Data sheet 705030
- Thyristor power controller type 70906x
  Data sheet 709061, 709062, 709063

Special modules

- Router module
  Data sheet 705040

Operating, visualization, recording

- Multifunction panel 840
  Data sheet 705060
- Operating panels
  Data sheet 705065

Power supply units

- 705090/05-33
  Data sheet 705090
- 705090/10-33
  Data sheet 705090

JUMO GmbH & Co. KG
Delivery address: Mackenrodtstraße 14
36039 Fulda, Germany
Postal address: 36035 Fulda, Germany
Phone: +49 661 6003-0
Fax: +49 661 6003-607
Email: mail@jumo.net
Internet: www.jumo.net

JUMO Instrument Co. Ltd.
JUMO House
Temple Bank, Riverway
Harlow, Essex, CM20 2DY, UK
Phone: +44 1279 63 55 33
Fax: +44 1279 62 50 29
Email: sales@jumo.co.uk
Internet: www.jumo.co.uk

JUMO Process Control, Inc.
6733 Myers Road
East Syracuse, NY 13057, USA
Phone: +1 315 437 5866
Fax: +1 315 437 5860
Email: info.us@jumo.net
Internet: www.jumousa.com

Order details

	(1)	**Basic type**
705060		Multifunction panel 840 (1x Ethernet (RJ45), 1x system bus In (RJ45), 1x system bus Out (RJ45), 2x USB host)
	(2)	**Version**
8		Standard, with factory settings
	(3)	**Interface Com1**
00		Not used
51		RS232 Modbus RTU
54		RS422/485 Modbus RTU
	(4)	**Interface Com2**
00		Not used
51		RS232 Modbus RTU
54		RS422/485 Modbus RTU
	(5)	**Voltage supply**
36		DC 24 V +25/-20 %
	(6)	**Extra codes housing**
000		No extra code
444		Stainless steel front with design foil (neutral)
	(7)	**DNV GL approval**
000		Without approval
062		With DNV GL approval[a]
	(8)	**Extra codes**
000		No extra code
213		Recording function

[a] The power supply unit used must also have a DNV GL or GL type approval (e.g. type 705090).

	(1)		(2)		(3)		(4)		(5)		(6)		(7)		(8)
Order code		/		-		-		-		/		,		,	
Order example	705060	/	8	-	00	-	00	-	36	/	000	,	000	,	213

Scope of delivery

1 multifunction panel 840 in the ordered version
8 mounting elements
1 strain relief for interface cable
1 template for panel cut-out
1 Installation Instructions

Accessories

Description	**Part no.**
Extra codes (activations):	
Recording function (extra code 213)	00569508
Additional accessories:	
Bar code scanner Gryphon GD4130	00407798
Memory stick USB 2.0 (2 GB)[a]	00505592

[a] The specified USB memory stick is tested and designed for industrial use. No liability is assumed for other brands.

JUMO GmbH & Co. KG
Delivery address: Mackenrodtstraße 14
36039 Fulda, Germany
Postal address: 36035 Fulda, Germany
Phone: +49 661 6003-0
Fax: +49 661 6003-607
Email: mail@jumo.net
Internet: www.jumo.net

JUMO Instrument Co. Ltd.
JUMO House
Temple Bank, Riverway
Harlow, Essex, CM20 2DY, UK
Phone: +44 1279 63 55 33
Fax: +44 1279 62 50 29
Email: sales@jumo.co.uk
Internet: www.jumo.co.uk

JUMO Process Control, Inc.
6733 Myers Road
East Syracuse, NY 13057, USA
Phone: +1 315 437 5866
Fax: +1 315 437 5860
Email: info.us@jumo.net
Internet: www.jumousa.com

General accessories

Description	Part no.
JUMO mTRON T system manual, English	00575577
Setup program with program editor JUMO mTRON T (on MiniDVD), incl. USB cable (A-plug to mini-B-plug, 3 m)	00569494
Program editor JUMO mTRON T (on MiniDVD), incl. USB cable (A-plug to mini-B-plug, 3 m)	00622333
PCA3000/PCC JUMO software package	00431884
PC Evaluation Software PCA3000	00431882
Release automatic print for PC Evaluation Software PCA3000	00505548
PCA Communication Software PCC	00431879
Plant Visualization Software JUMO SVS3000: See data sheet 700755	-
USB cable A-plug mini-B-plug 3 m	00506252

Content of the Mini-DVD:
- Setup program with program editor JUMO mTRON T in case of part no. 00569494
- Program editor JUMO mTRON T in case of part no. 00622333
- CODESYS programming software (free version)
- CODESYS Repository Package - Operating panels (free version)
- GSD file JUMO mTRON T - CPU (free version)
- PC Evaluation Software PCA3000 (30-day trial version)
- PCA Communication Software PCC (30-day trial version)
- Documentation in PDF format

JUMO GmbH & Co. KG
Delivery address: Mackenrodtstraße 14
36039 Fulda, Germany
Postal address: 36035 Fulda, Germany
Phone: +49 661 6003-0
Fax: +49 661 6003-607
Email: mail@jumo.net
Internet: www.jumo.net

JUMO Instrument Co. Ltd.
JUMO House
Temple Bank, Riverway
Harlow, Essex CM20 2DY, UK
Phone: +44 1279 635533
Fax: +44 1279 635262
Email: sales@jumo.co.uk
Internet: www.jumo.co.uk

JUMO Process Control, Inc.
6733 Myers Road
East Syracuse, NY 13057, USA
Phone: 315-437-5866
1-800-554-5866
Fax: 315-437-5860
Email: info.us@jumo.net
Internet: www.jumousa.com

JUMO mTRON T
Measuring, control, and automation system

Operating panels

Brief description

The basic version of the JUMO mTRON T automation system includes the multifunction panel 840 (TFT-touchscreen) with a screen size of 21.3 cm (8.4") as standard. Among other features, it offers user administration with access to parameter and configuration data for the whole system as well as predefined screens for service, controller, program generator, and recording functions (including batch reporting). It is also possible to create customized process screens that map the actual plant.

The additional operating panels mean that the automation system can be configured with even greater flexibility. The operating panels come with CODESYS PLC as well as target and web visualization, which is implemented by customized PLC applications. Operation is done within specific process screens. Connecting the panels using CODESYS project design enables direct access to the PLC variables of the JUMO mTRON T via CODESYS data server (PLC option for central processing unit required). This also means that no costs are incurred for a separate external programming software package for each workstation.

The operating panels are supported by the automation system JUMO mTRON T as of system version 02 and as of CODESYS V3.5 SP3 patch 9.

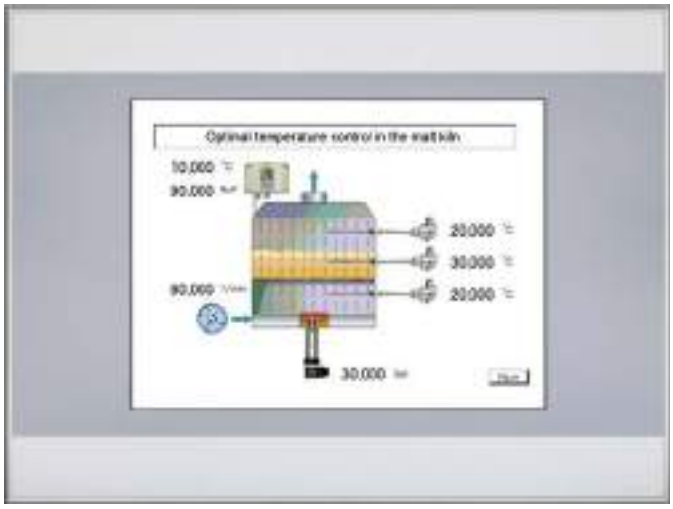

Type 705065/...

System structure

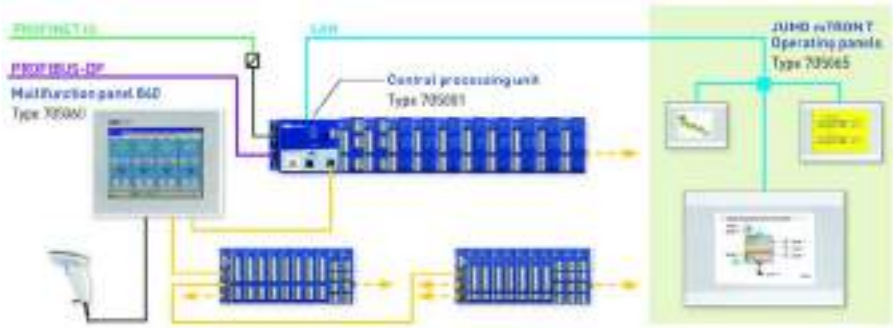

Features

- TFT color screen (64k colors) with resistive-touch technology
- Screen size (diagonal) 8.9 cm (3.5“), 14.5 cm (5.7“) und 26.4 cm (10.4“)
- Resolution 320 × 240 pixel and 640 × 480 pixel
- Different case types (plastic, metal)
- Protection type IP65 (on the front)
- Voltage supply DC 24 V
- Ethernet interface (RJ45) for connection to the system
- Up to four operating panels per central processing unit (PLC option required)
- Operation of the system within specific process screens
- Direct access to PLC variables

JUMO GmbH & Co. KG
Delivery address: Mackenrodtstraße 14
36039 Fulda, Germany
Postal address: 36035 Fulda, Germany
Phone: +49 661 6003-0
Fax: +49 661 6003-607
Email: mail@jumo.net
Internet: www.jumo.net

JUMO Instrument Co. Ltd.
JUMO House
Temple Bank, Riverway
Harlow, Essex CM20 2DY, UK
Phone: +44 1279 635533
Fax: +44 1279 635262
Email: sales@jumo.co.uk
Internet: www.jumo.co.uk

JUMO Process Control, Inc.
6733 Myers Road
East Syracuse, NY 13057, USA
Phone: 315-437-5866
1-800-554-5866
Fax: 315-437-5860
Email: info.us@jumo.net
Internet: www.jumousa.com

Operating panel 350 (type 705065/0x-1...)

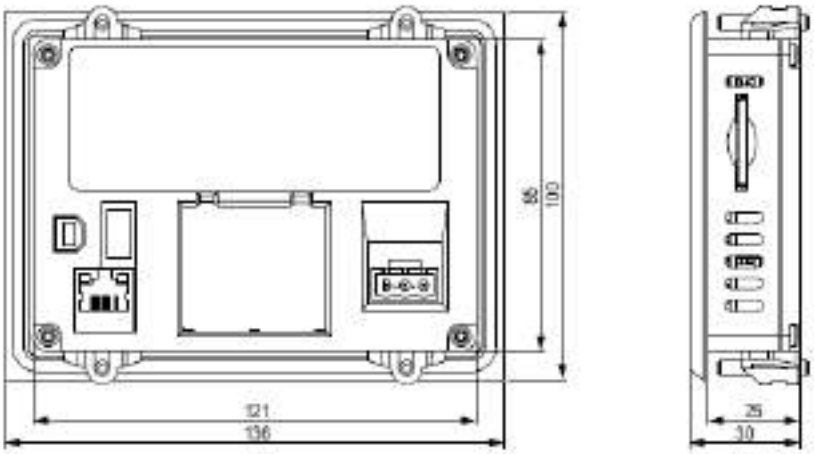

Screen type		TFT color screen
Touch technology		Resistive
Screen size (diagonal)		8.9 cm (3.5“)
Resolution		320 × 240 pixel
Number of colors		64k
Contrast	typ.	300:1
Brightness	typ.	250 cd/m^2
Background lighting		LED (dimmable by software)
Voltage supply	nom.	DC 24 V +25/-20 % SELV
Power consumption	max.	5 W
Current inrush		1.5 A^{2}s
Assembly type		Insertion in panel cut-out
Case type		Plastic
Front panel type		Plastic with neutral design foil (fully enclosed)
Dimensions (W × H × D)		136 mm x 100 mm x 30 mm
Front panel depth		5 mm
Mounting depth		25 mm
Panel cut-out		123 mm x 87 mm (± 1 mm)
Weight		0.3 kg
Protection type		IP65 (front side), IP20 (rear side)
Ambient temperature range		0 to 50 °C
Storage temperature range		-20 to +60 °C
Resistance to climatic conditions		Relative humidity 10 to 95 %, non-condensing

The complete technical data as well as further technical information can be found in the manufacturer's original documents (www.eaton.com; use search function).
Type 705065/0x-1...: search for „XV-102“

JUMO GmbH & Co. KG
Delivery address: Mackenrodtstraße 14
36039 Fulda, Germany
Postal address: 36035 Fulda, Germany
Phone: +49 661 6003-0
Fax: +49 661 6003-607
Email: mail@jumo.net
Internet: www.jumo.net

JUMO Instrument Co. Ltd.
JUMO House
Temple Bank, Riverway
Harlow, Essex CM20 2DY, UK
Phone: +44 1279 635533
Fax: +44 1279 635262
Email: sales@jumo.co.uk
Internet: www.jumo.co.uk

JUMO Process Control, Inc.
6733 Myers Road
East Syracuse, NY 13057, USA
Phone: 315-437-5866
1-800-554-5866
Fax: 315-437-5860
Email: info.us@jumo.net
Internet: www.jumousa.com

Operating panel 570 (type 705065/0x-2...)

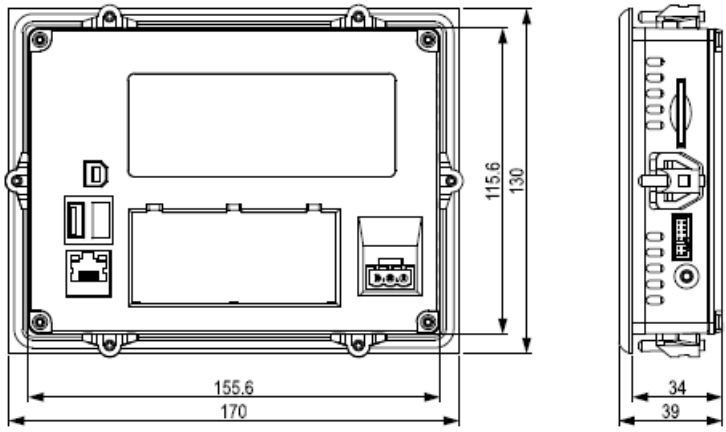

Screen type		TFT color screen
Touch technology		Resistive
Screen size (diagonal)		14.5 cm (5.7“)
Resolution		640 × 480 pixels
Number of colors		64k
Contrast	typ.	300:1
Brightness	typ.	250 cd/m^2
Background lighting		LED (dimmable by software)
Voltage supply	nom.	DC 24 V +25/-20 % SELV
Power consumption	max.	10 W
Current inrush		1.5 A^{2}s
Assembly type		Insertion in panel cut-out
Case type		Plastic
Front panel type		Plastic with neutral design foil (fully enclosed)
Dimensions (W × H × D)		170 mm x 130 mm x 39 mm
Front panel depth		5 mm
Mounting depth		34 mm
Panel cut-out		157 mm x 117 mm (± 1 mm)
Weight		0.6 kg
Protection type		IP65 (front side), IP20 (rear side)
Ambient temperature range		0 to 50 °C
Storage temperature range		-20 to +60 °C
Resistance to climatic conditions		Relative humidity 10 to 95 %, non-condensing

The complete technical data as well as further technical information can be found in the manufacturer's original documents (www.eaton.com; use search function).
Type 705065/0x-2...: search for „XV-102“

JUMO GmbH & Co. KG
Delivery address: Mackenrodtstraße 14
36039 Fulda, Germany
Postal address: 36035 Fulda, Germany
Phone: +49 661 6003-0
Fax: +49 661 6003-607
Email: mail@jumo.net
Internet: www.jumo.net

JUMO Instrument Co. Ltd.
JUMO House
Temple Bank, Riverway
Harlow, Essex CM20 2DY, UK
Phone: +44 1279 635533
Fax: +44 1279 635262
Email: sales@jumo.co.uk
Internet: www.jumo.co.uk

JUMO Process Control, Inc.
6733 Myers Road
East Syracuse, NY 13057, USA
Phone: 315-437-5866
1-800-554-5866
Fax: 315-437-5860
Email: info.us@jumo.net
Internet: www.jumousa.com

Operating panel 1040 (type 705065/0x-5...)

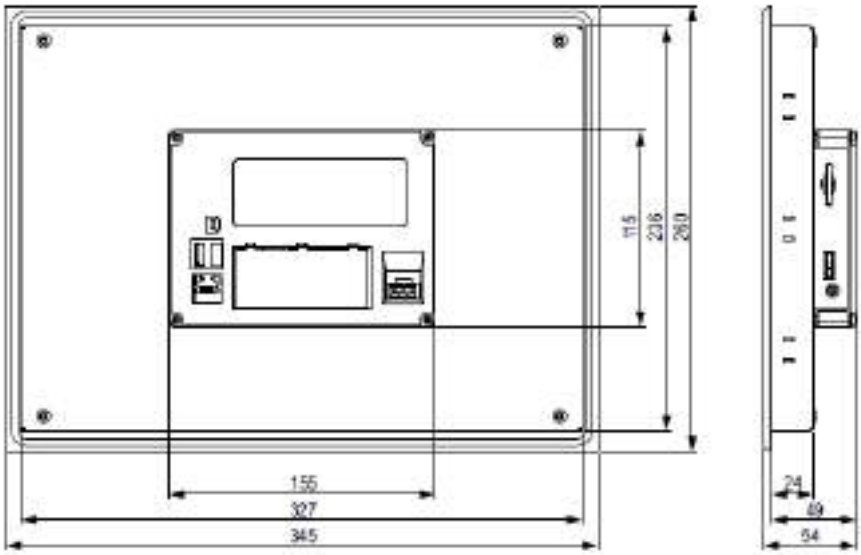

Screen type		TFT color screen
Touch technology		Resistive
Screen size (diagonal)		26.4 cm (10.4“)
Resolution		640 × 480 pixels
Number of colors		64k
Contrast	typ.	300:1
Brightness	typ.	250 cd/m^2
Background lighting		LED (dimmable by software)
Voltage supply	nom.	DC 24 V +25/-20 % SELV
Power consumption	max.	12 W
Current inrush		1.5 A^{2}s
Assembly type		Insertion in panel cut-out
Case type		Metal
Front panel type		Metal with neutral design foil (fully enclosed)
Dimensions (W × H × D)		345 mm x 260 mm x 54 mm
Front panel depth		5 mm
Mounting depth		49 mm
Panel cut-out		329 mm x 238 mm (± 1 mm)
Weight		3.0 kg
Protection type		IP65 (front side), IP20 (rear side)
Ambient temperature range		0 to 50 °C
Storage temperature range		-20 to +60 °C
Resistance to climatic conditions		Relative humidity 10 to 95 %, non-condensing

The complete technical data as well as further technical information can be found in the manufacturer's original documents (www.eaton.com; use search function):
Type 705065/0x-5...: search for „XV-152“

JUMO GmbH & Co. KG
Delivery address: Mackenrodtstraße 14
36039 Fulda, Germany
Postal address: 36035 Fulda, Germany
Phone: +49 661 6003-0
Fax: +49 661 6003-607
Email: mail@jumo.net
Internet: www.jumo.net

JUMO Instrument Co. Ltd.
JUMO House
Temple Bank, Riverway
Harlow, Essex CM20 2DY, UK
Phone: +44 1279 635533
Fax: +44 1279 635262
Email: sales@jumo.co.uk
Internet: www.jumo.co.uk

JUMO Process Control, Inc.
6733 Myers Road
East Syracuse, NY 13057, USA
Phone: 315-437-5866
1-800-554-5866
Fax: 315-437-5860
Email: info.us@jumo.net
Internet: www.jumousa.com

Order details

	(1)	**Basic type**
705065		Operating panel with TFT-touchscreen
	(2)	**Basic type extension**
0		Standard
	(3)	**Version**
8		Standard with factory settings
9		Customer-specific configuration (PLC application)
	(4)	**Screen size (diagonal)**
1		8.9 cm (3.5“), operating panel 350
2		14.5 cm (5.7“), operating panel 570
5		26.4 cm (10.4“), operating panel 1040
	(5)	**Technology**
0		Resistive
	(6)	**Voltage supply**
36		DC 24 V +25/-20 %
	(7)	**Extra codes**
000		No extra code

Other versions upon request.

	(1)		(2)	(3)		(4)		(5)		(6)		(7)
Order code		/			-		-		-		/	
Order example	705065	/	0	8	-	1	-	0	-	36	/	000

Scope of delivery

1 operating panel in the ordered version
Retaining brackets with threaded pin for mounting the device (quantity depends on device type)
1 sealing strip for mounting the device (glued in the device and/or enclosed separately)
1 power supply connector for the device

Accessories

Description	Part no.
SD card without OS, min. 128 MB, for memory expansion	00610471

JUMO GmbH & Co. KG
Delivery address: Mackenrodtstraße 14
36039 Fulda, Germany
Postal address: 36035 Fulda, Germany
Phone: +49 661 6003-0
Fax: +49 661 6003-607
Email: mail@jumo.net
Internet: www.jumo.net

JUMO Instrument Co. Ltd.
JUMO House
Temple Bank, Riverway
Harlow, Essex, CM20 2DY, UK
Phone: +44 1279 63 55 33
Fax: +44 1279 62 50 29
Email: sales@jumo.co.uk
Internet: www.jumo.co.uk

JUMO Process Control, Inc.
6733 Myers Road
East Syracuse, NY 13057, USA
Phone: +1 315 437 5866
Fax: +1 315 437 5860
Email: info.us@jumo.net
Internet: www.jumousa.com

JUMO variTRON Web Panels

705070

Brief description

JUMO variTRON web panels can be easily connected to automation systems of the JUMO variTRON series via Ethernet connection. The web panels support CODESYS Remote TargetVisu or WebVisu. As a result, visualizations created with CODESYS can be displayed on the web panels and used to operate the system. The prerequisite for this is the corresponding extra code of the JUMO variTRON central processing unit: For visualization by means of a browser, extra code 281 (WebVisu) is required; for visualization via Remote TargetVisu, extra code 280 must be selected.

In principle, web panels other than those offered by JUMO can also be used together with an automation system of the JUMO variTRON series, provided that they support the required CODESYS visualization.

Type 705070/...

System structure

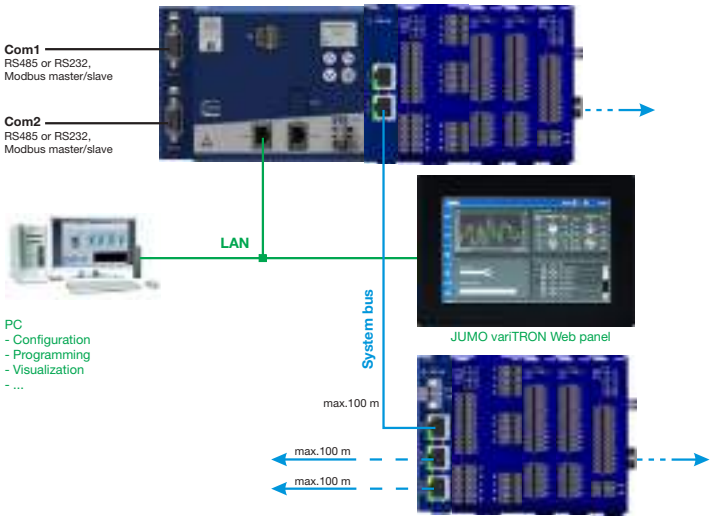

Features

- TFT colour screen, resistive or capacitive
- Multi-touch operation (capacitive), also with gloves
- Screen sizes (diagonal) from 10.9 cm (4.3") to 54.6 cm (21.5")
- Screen resolutions from 480 × 272 to 1920 × 1080
- Panel mounting or variable fastening
- Connection to the central processing unit via Ethernet interface
- Voltage supply DC 24 V or PoE
- Versions for food industry
- UL and DNV GL approval (type dependent)

JUMO GmbH & Co. KG
Delivery address: Mackenrodtstraße 14
36039 Fulda, Germany
Postal address: 36035 Fulda, Germany
Phone: +49 661 6003-0
Fax: +49 661 6003-607
Email: mail@jumo.net
Internet: www.jumo.net

JUMO Instrument Co. Ltd.
JUMO House
Temple Bank, Riverway
Harlow, Essex, CM20 2DY, UK
Phone: +44 1279 63 55 33
Fax: +44 1279 62 50 29
Email: sales@jumo.co.uk
Internet: www.jumo.co.uk

JUMO Process Control, Inc.
6733 Myers Road
East Syracuse, NY 13057, USA
Phone: +1 315 437 5866
Fax: +1 315 437 5860
Email: info.us@jumo.net
Internet: www.jumousa.com

EXOR Standard eX

eX707 – Type 705070/1-x-10-...

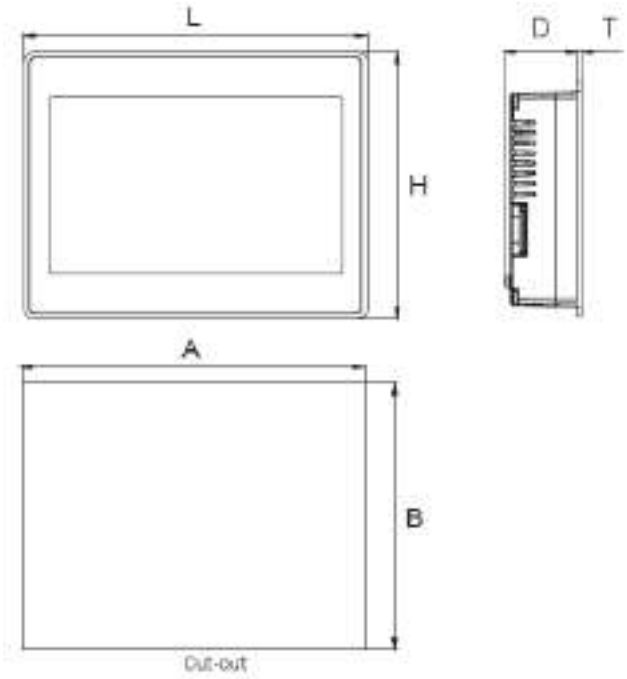

Screen type	TFT color screen
Touch technology	Capacitive, multi-touch operation
Screen size (diagonal)	Approx. 17.8 cm (7")
Resolution	800 × 480
Number of colors	16M
Brightness (luminance) typ.	500 cd/m^2
Backlight	LED (dimmable)
Interfaces	3 × Ethernet, 2 × USB host, 1 × serial
Voltage supply	DC 24 V (10 to 32 V)
Current consumption	0.7 A at DC 24 V
Installation type	Installation in panel cut-out
Dimensions L × H × (D + T)	187 mm × 147 mm × (47 + 8) mm
Front panel depth T	8 mm
Mounting depth D	47 mm
Panel cut-out A × B	176 mm × 136 mm
Weight	1.5 kg
Protection type	IP66 (front side), IP20 (rear side)
Operating temperature range	-20 to +60 °C (vertical mounting)
Storage temperature range	-20 to +70 °C
Resistance to climatic conditions	Relative humidity 5 to 85 %, non-condensing
Approvals	cULus, DNV GL
Model (www.exorint.com)	eX707

The complete technical data as well as further technical information can be found in the manufacturer's original documents (www.exorint.com).

JUMO GmbH & Co. KG
Delivery address: Mackenrodtstraße 14
36039 Fulda, Germany
Postal address: 36035 Fulda, Germany
Phone: +49 661 6003-0
Fax: +49 661 6003-607
Email: mail@jumo.net
Internet: www.jumo.net

JUMO Instrument Co. Ltd.
JUMO House
Temple Bank, Riverway
Harlow, Essex, CM20 2DY, UK
Phone: +44 1279 63 55 33
Fax: +44 1279 62 50 29
Email: sales@jumo.co.uk
Internet: www.jumo.co.uk

JUMO Process Control, Inc.
6733 Myers Road
East Syracuse, NY 13057, USA
Phone: +1 315 437 5866
Fax: +1 315 437 5860
Email: info.us@jumo.net
Internet: www.jumousa.com

eX710 – Type 705070/1-x-20-...

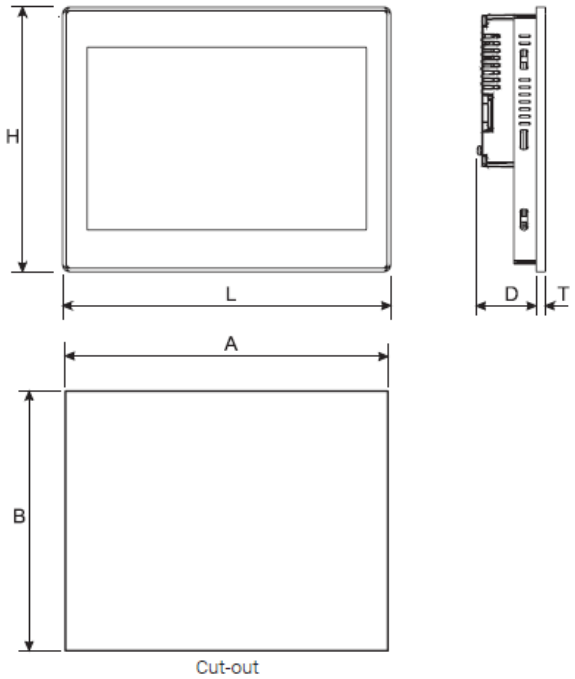

Screen type	TFT color screen
Touch technology	Capacitive, multi-touch operation
Screen size (diagonal)	Approx. 25.7 cm (10.1")
Resolution	1280 × 800
Number of colors	16M
Brightness (luminance) typ.	500 cd/m^2
Backlight	LED (dimmable)
Interfaces	3 × Ethernet, 2 × USB host, 1 × serial
Voltage supply	DC 24 V (10 to 32 V)
Current consumption	1.0 A at DC 24 V
Installation type	Installation in panel cut-out
Dimensions L × H × (D + T)	282 mm × 197 mm × (56 + 8) mm
Front panel depth T	8 mm
Mounting depth D	56 mm
Panel cut-out A × B	271 mm × 186 mm
Weight	2.5 kg
Protection type	IP66 (front side), IP20 (rear side)
Operating temperature range	-20 to +60 °C (vertical mounting)
Storage temperature range	-20 to +70 °C
Resistance to climatic conditions	Relative humidity 5 to 85 %, non-condensing
Approvals	cULus, DNV GL
Model (www.exorint.com)	eX710

The complete technical data as well as further technical information can be found in the manufacturer's original documents (www.exorint.com).

JUMO GmbH & Co. KG
Delivery address: Mackenrodtstraße 14
36039 Fulda, Germany
Postal address: 36035 Fulda, Germany
Phone: +49 661 6003-0
Fax: +49 661 6003-607
Email: mail@jumo.net
Internet: www.jumo.net

JUMO Instrument Co. Ltd.
JUMO House
Temple Bank, Riverway
Harlow, Essex, CM20 2DY, UK
Phone: +44 1279 63 55 33
Fax: +44 1279 62 50 29
Email: sales@jumo.co.uk
Internet: www.jumo.co.uk

JUMO Process Control, Inc.
6733 Myers Road
East Syracuse, NY 13057, USA
Phone: +1 315 437 5866
Fax: +1 315 437 5860
Email: info.us@jumo.net
Internet: www.jumousa.com

eX715 – Type 705070/1-x-30-...

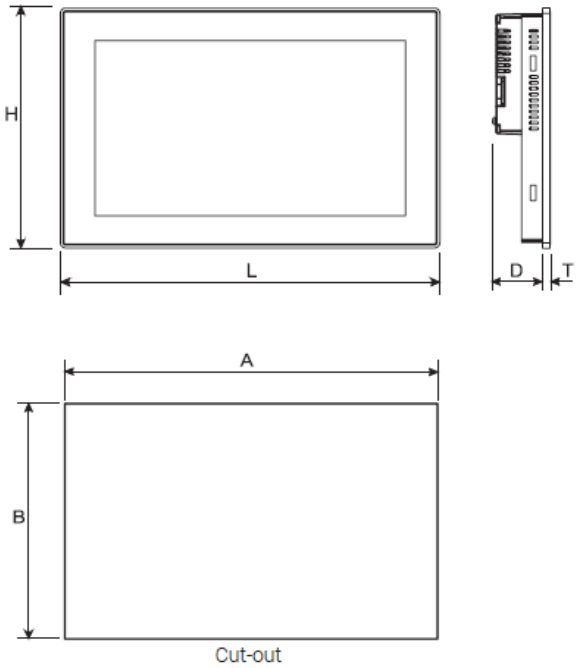

Screen type	TFT color screen
Touch technology	Capacitive, multi-touch operation
Screen size (diagonal)	Approx. 39.6 cm (15.6")
Resolution	1366 × 768
Number of colors	16M
Brightness (luminance) typ.	400 cd/m^2
Backlight	LED (dimmable)
Interfaces	3 × Ethernet, 2 × USB host, 1 × serial
Voltage supply	DC 24 V (10 to 32 V)
Current consumption	1.2 A at DC 24 V
Installation type	Installation in panel cut-out
Dimensions L × H × (D + T)	422 mm × 267 mm × (56 + 8) mm
Front panel depth T	8 mm
Mounting depth D	56 mm
Panel cut-out A × B	411 mm × 256 mm
Weight	4.1 kg
Protection type	IP66 (front side), IP20 (rear side)
Operating temperature range	-20 to +60 °C (vertical mounting)
Storage temperature range	-20 to +70 °C
Resistance to climatic conditions	Relative humidity 5 to 85 %, non-condensing
Approvals	cULus, DNV GL
Model (www.exorint.com)	eX715

The complete technical data as well as further technical information can be found in the manufacturer's original documents (www.exorint.com).

JUMO GmbH & Co. KG
Delivery address: Mackenrodtstraße 14
36039 Fulda, Germany
Postal address: 36035 Fulda, Germany
Phone: +49 661 6003-0
Fax: +49 661 6003-607
Email: mail@jumo.net
Internet: www.jumo.net

JUMO Instrument Co. Ltd.
JUMO House
Temple Bank, Riverway
Harlow, Essex, CM20 2DY, UK
Phone: +44 1279 63 55 33
Fax: +44 1279 62 50 29
Email: sales@jumo.co.uk
Internet: www.jumo.co.uk

JUMO Process Control, Inc.
6733 Myers Road
East Syracuse, NY 13057, USA
Phone: +1 315 437 5866
Fax: +1 315 437 5860
Email: info.us@jumo.net
Internet: www.jumousa.com

eX721 – Type 705070/1-x-40-...

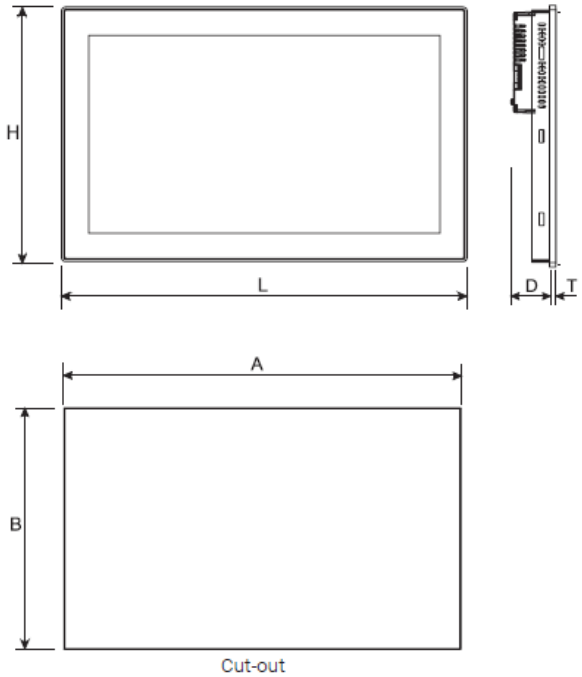

Screen type	TFT color screen
Touch technology	Capacitive, multi-touch operation
Screen size (diagonal)	Approx. 54.6 cm (21.5")
Resolution	1920 × 1080
Number of colors	16M
Brightness (luminance) typ.	300 cd/m^2
Backlight	LED (dimmable)
Interfaces	3 × Ethernet, 2 × USB host, 1 × serial
Voltage supply	DC 24 V (10 to 32 V)
Current consumption	1.7 A at DC 24 V
Installation type	Installation in panel cut-out
Dimensions L × H × (D + T)	552 mm × 347 mm × (56 + 8.5) mm
Front panel depth T	8.5 mm
Mounting depth D	56 mm
Panel cut-out A × B	541 mm × 336 mm
Weight	6.1 kg
Protection type	IP66 (front side), IP20 (rear side)
Operating temperature range	-20 to +60 °C (vertical mounting)
Storage temperature range	-20 to +70 °C
Resistance to climatic conditions	Relative humidity 5 to 85 %, non-condensing
Approvals	cULus, DNV GL
Model (www.exorint.com)	eX721

The complete technical data as well as further technical information can be found in the manufacturer's original documents (www.exorint.com).

JUMO GmbH & Co. KG
Delivery address: Mackenrodtstraße 14
36039 Fulda, Germany
Postal address: 36035 Fulda, Germany
Phone: +49 661 6003-0
Fax: +49 661 6003-607
Email: mail@jumo.net
Internet: www.jumo.net

JUMO Instrument Co. Ltd.
JUMO House
Temple Bank, Riverway
Harlow, Essex, CM20 2DY, UK
Phone: +44 1279 63 55 33
Fax: +44 1279 62 50 29
Email: sales@jumo.co.uk
Internet: www.jumo.co.uk

JUMO Process Control, Inc.
6733 Myers Road
East Syracuse, NY 13057, USA
Phone: +1 315 437 5866
Fax: +1 315 437 5860
Email: info.us@jumo.net
Internet: www.jumousa.com

EXOR Food & Beverage eXFB

eX707FB – Type 705070/2-x-11-...

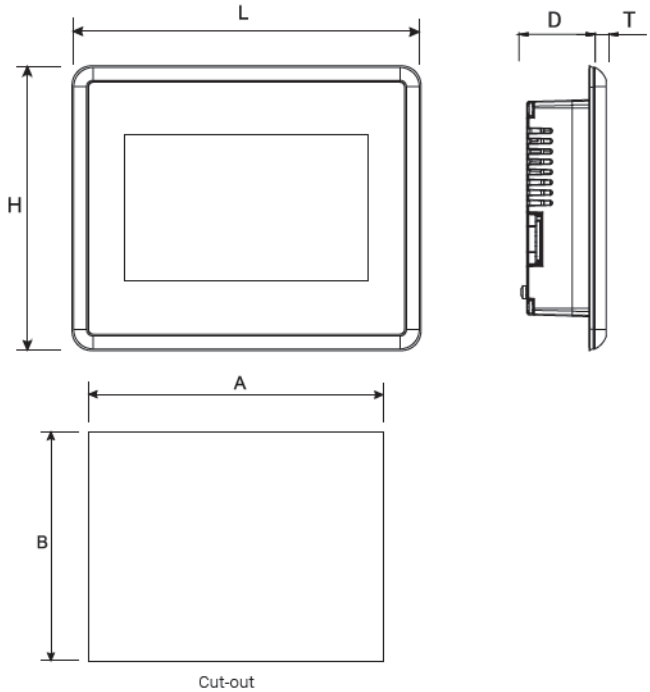

Screen type	TFT color screen
Touch technology	Capacitive, multi-touch operation
Screen size (diagonal)	Approx. 17.8 cm (7")
Resolution	800 × 480
Number of colors	16M
Brightness (luminance) typ.	500 cd/m^2
Backlight	LED (dimmable)
Interfaces	3 × Ethernet, 2 × USB host, 1 × serial
Voltage supply	DC 24 V (10 to 32 V)
Current consumption	0.7 A at DC 24 V
Installation type	Installation in panel cut-out
Dimensions L × H × (D + T)	217 mm × 177 mm × (45 + 10) mm
Front panel depth T	10 mm
Mounting depth D	45 mm
Panel cut-out A × B	176 mm × 136 mm
Weight	2.5 kg
Protection type	At the front IP69, at the rear IP20
Operating temperature range	-20 to +60 °C (vertical mounting)
Storage temperature range	-20 to +70 °C
Resistance to climatic conditions	Relative humidity 5 to 85 %, non-condensing
Approvals	cULus
Model (www.exorint.com)	eX707FB

The complete technical data as well as further technical information can be found in the manufacturer's original documents (www.exorint.com).

JUMO GmbH & Co. KG
Delivery address: Mackenrodtstraße 14
36039 Fulda, Germany
Postal address: 36035 Fulda, Germany
Phone: +49 661 6003-0
Fax: +49 661 6003-607
Email: mail@jumo.net
Internet: www.jumo.net

JUMO Instrument Co. Ltd.
JUMO House
Temple Bank, Riverway
Harlow, Essex, CM20 2DY, UK
Phone: +44 1279 63 55 33
Fax: +44 1279 62 50 29
Email: sales@jumo.co.uk
Internet: www.jumo.co.uk

JUMO Process Control, Inc.
6733 Myers Road
East Syracuse, NY 13057, USA
Phone: +1 315 437 5866
Fax: +1 315 437 5860
Email: info.us@jumo.net
Internet: www.jumousa.com

eX715FB – Type 705070/2-x-31-...

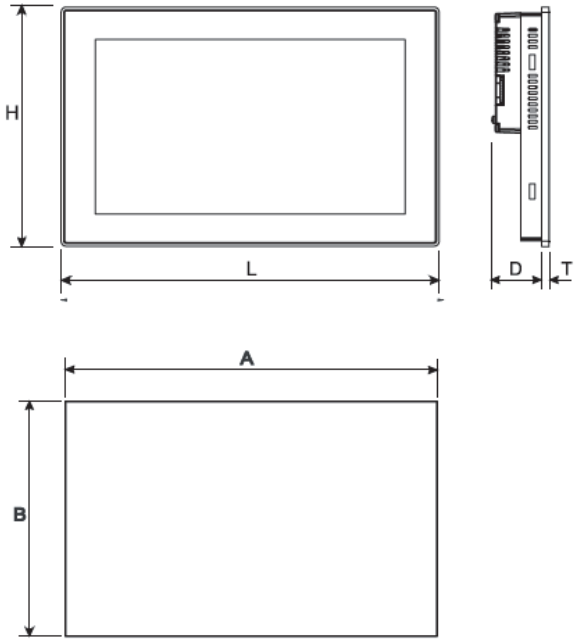

Cut-out

Screen type	TFT color screen
Touch technology	Capacitive, multi-touch operation
Screen size (diagonal)	Approx. 39.6 cm (15.6")
Resolution	1366 × 768
Number of colors	16M
Brightness (luminance) typ.	400 cd/m^2
Backlight	LED (dimmable)
Interfaces	3 × Ethernet, 2 × USB host, 1 × serial
Voltage supply	DC 24 V (10 to 32 V)
Current consumption	1.2 A at DC 24 V
Installation type	Installation in panel cut-out
Dimensions L × H × (D + T)	450 mm × 295 mm × (56 + 8) mm
Front panel depth T	8 mm
Mounting depth D	56 mm
Panel cut-out A × B	411 mm × 256 mm
Weight	5.2 kg
Protection type	At the front IP69, at the rear IP20
Operating temperature range	-20 to +60 °C (vertical mounting)
Storage temperature range	-30 to +80 °C
Resistance to climatic conditions	Relative humidity 5 to 85 %, non-condensing
Approvals	cULus
Model (www.exorint.com)	eX715FB

The complete technical data as well as further technical information can be found in the manufacturer's original documents (www.exorint.com).

JUMO GmbH & Co. KG
Delivery address: Mackenrodtstraße 14
36039 Fulda, Germany
Postal address: 36035 Fulda, Germany
Phone: +49 661 6003-0
Fax: +49 661 6003-607
Email: mail@jumo.net
Internet: www.jumo.net

JUMO Instrument Co. Ltd.
JUMO House
Temple Bank, Riverway
Harlow, Essex, CM20 2DY, UK
Phone: +44 1279 63 55 33
Fax: +44 1279 62 50 29
Email: sales@jumo.co.uk
Internet: www.jumo.co.uk

JUMO Process Control, Inc.
6733 Myers Road
East Syracuse, NY 13057, USA
Phone: +1 315 437 5866
Fax: +1 315 437 5860
Email: info.us@jumo.net
Internet: www.jumousa.com

EXOR JSmart eXJS

eX707JS – Type 705070/3-x-12-...

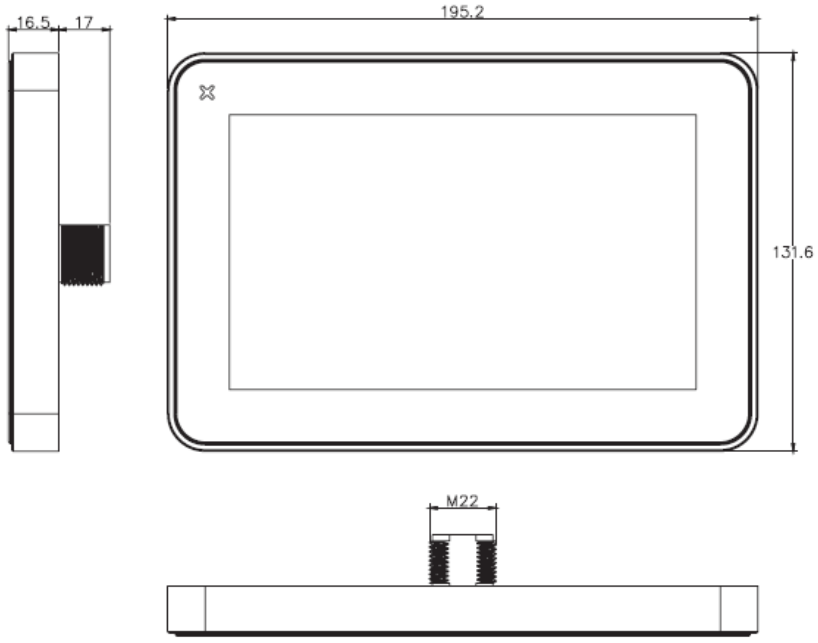

Screen type	TFT color screen
Touch technology	Capacitive, multi-touch operation (also with gloves)
Screen size (diagonal)	Approx. 17.8 cm (7")
Resolution	1024 × 600
Number of colors	16M
Brightness (luminance) typ.	400 cd/m^2
Backlight	LED (dimmable)
Interfaces	1 × Ethernet (PoE), 1 × USB host (adapter required)
Voltage supply	Power over Ethernet (IEEE 802.3af PoE)
Power consumption	9 W
Installation type	Threaded mounting M22
Dimensions without thread	195.2 mm × 131.6 mm × 16.5 mm
Thread length	17 mm
Weight	0.7 kg
Protection type	IP67 (suitable accessories and suitable cables required)
Operating temperature range	-20 to +55 °C (vertical mounting)
Storage temperature range	-30 to +80 °C
Resistance to climatic conditions	Relative humidity 5 to 85 %, non-condensing
Approvals	cULus
Model (www.exorint.com)	JSmart707

The complete technical data as well as further technical information can be found in the manufacturer's original documents (www.exorint.com).

JUMO GmbH & Co. KG
Delivery address: Mackenrodtstraße 14
36039 Fulda, Germany
Postal address: 36035 Fulda, Germany
Phone: +49 661 6003-0
Fax: +49 661 6003-607
Email: mail@jumo.net
Internet: www.jumo.net

JUMO Instrument Co. Ltd.
JUMO House
Temple Bank, Riverway
Harlow, Essex, CM20 2DY, UK
Phone: +44 1279 63 55 33
Fax: +44 1279 62 50 29
Email: sales@jumo.co.uk
Internet: www.jumo.co.uk

JUMO Process Control, Inc.
6733 Myers Road
East Syracuse, NY 13057, USA
Phone: +1 315 437 5866
Fax: +1 315 437 5860
Email: info.us@jumo.net
Internet: www.jumousa.com

eX710JS – Type 705070/3-x-22-...

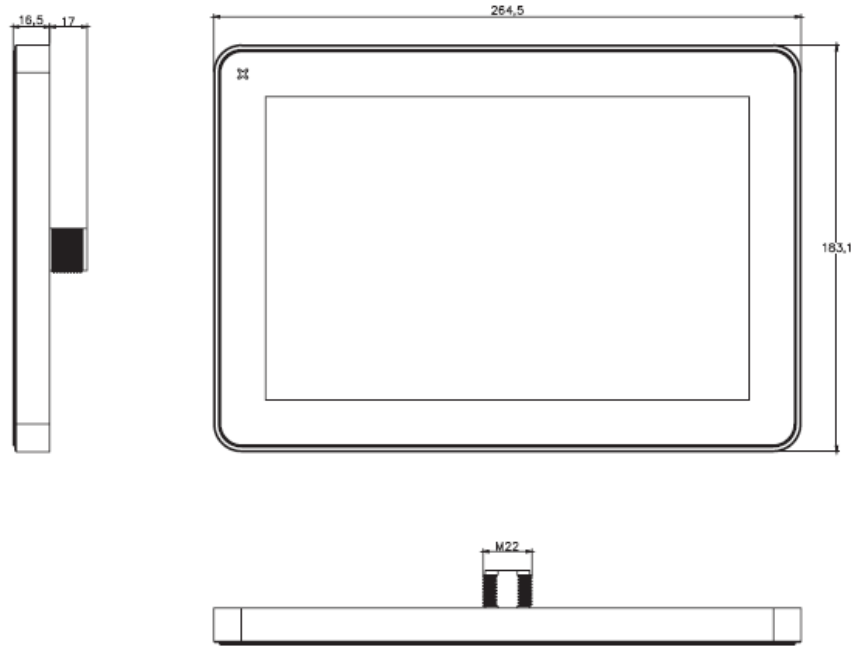

Screen type	TFT color screen
Touch technology	Capacitive, multi-touch operation (also with gloves)
Screen size (diagonal)	Approx. 25.7 cm (10.1")
Resolution	1280 × 800
Number of colors	16M
Brightness (luminance) typ.	400 cd/m^2
Backlight	LED (dimmable)
Interfaces	1 × Ethernet (PoE), 1 × USB host (adapter required)
Voltage supply	Power over Ethernet (IEEE 802.3af PoE)
Power consumption	12 W
Installation type	Threaded mounting M22
Dimensions without thread	264.5 mm × 183.1 mm × 16.5 mm
Thread length	17 mm
Weight	1.2 kg
Protection type	IP67 (suitable accessories and suitable cables required)
Operating temperature range	-20 to +55 °C (vertical mounting)
Storage temperature range	-30 to +80 °C
Resistance to climatic conditions	Relative humidity 5 to 85 %, non-condensing
Approvals	cULus
Model (www.exorint.com)	JSmart710

The complete technical data as well as further technical information can be found in the manufacturer's original documents (www.exorint.com).

JUMO GmbH & Co. KG
Delivery address: Mackenrodtstraße 14
36039 Fulda, Germany
Postal address: 36035 Fulda, Germany
Phone: +49 661 6003-0
Fax: +49 661 6003-607
Email: mail@jumo.net
Internet: www.jumo.net

JUMO Instrument Co. Ltd.
JUMO House
Temple Bank, Riverway
Harlow, Essex, CM20 2DY, UK
Phone: +44 1279 63 55 33
Fax: +44 1279 62 50 29
Email: sales@jumo.co.uk
Internet: www.jumo.co.uk

JUMO Process Control, Inc.
6733 Myers Road
East Syracuse, NY 13057, USA
Phone: +1 315 437 5866
Fax: +1 315 437 5860
Email: info.us@jumo.net
Internet: www.jumousa.com

eX715JS – Type 705070/3-x-32-...

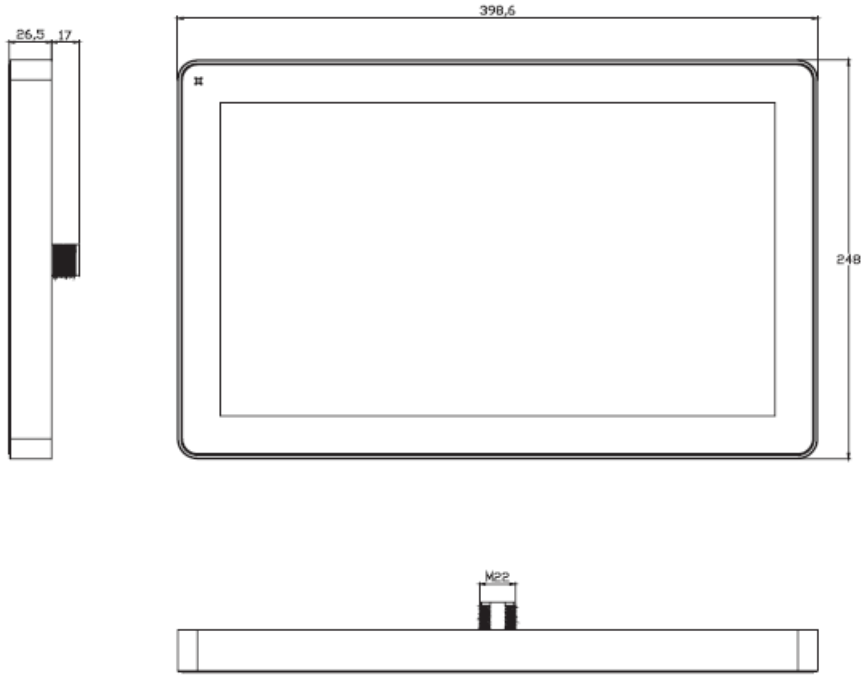

Screen type	TFT color screen
Touch technology	Capacitive, multi-touch operation (also with gloves)
Screen size (diagonal)	Approx. 39.6 cm (15.6")
Resolution	1366 × 768
Number of colors	16M
Brightness (luminance) typ.	400 cd/m^2
Backlight	LED (dimmable)
Interfaces	1 × Ethernet (PoE), 1 × USB host (adapter required)
Voltage supply	Power over Ethernet (IEEE 802.3af PoE)
Power consumption	19 W
Installation type	Threaded mounting M22
Dimensions without thread	398.6 mm × 248 mm × 26.5 mm
Thread length	17 mm
Weight	4.0 kg
Protection type	IP67 (suitable accessories and suitable cables required)
Operating temperature range	-20 to +55 °C (vertical mounting)
Storage temperature range	-30 to +80 °C
Resistance to climatic conditions	Relative humidity 5 to 85 %, non-condensing
Approvals	cULus
Model (www.exorint.com)	JSmart715

The complete technical data as well as further technical information can be found in the manufacturer's original documents (www.exorint.com).

JUMO GmbH & Co. KG
Delivery address: Mackenrodtstraße 14
36039 Fulda, Germany
Postal address: 36035 Fulda, Germany
Phone: +49 661 6003-0
Fax: +49 661 6003-607
Email: mail@jumo.net
Internet: www.jumo.net

JUMO Instrument Co. Ltd.
JUMO House
Temple Bank, Riverway
Harlow, Essex, CM20 2DY, UK
Phone: +44 1279 63 55 33
Fax: +44 1279 62 50 29
Email: sales@jumo.co.uk
Internet: www.jumo.co.uk

JUMO Process Control, Inc.
6733 Myers Road
East Syracuse, NY 13057, USA
Phone: +1 315 437 5866
Fax: +1 315 437 5860
Email: info.us@jumo.net
Internet: www.jumousa.com

eX721JS – Type 705070/3-x-42-...

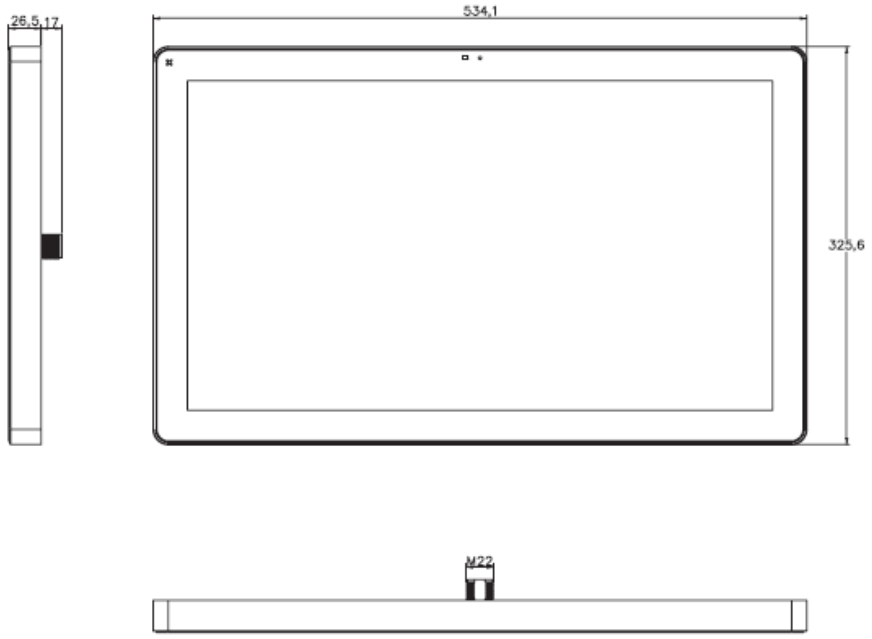

Screen type	TFT color screen
Touch technology	Capacitive, multi-touch operation (also with gloves)
Screen size (diagonal)	Approx. 54.6 cm (21.5")
Resolution	1920 × 1080
Number of colors	16M
Brightness (luminance) typ.	400 cd/m^2
Backlight	LED (dimmable)
Interfaces	1 × Ethernet (PoE), 1 × USB host (adapter required)
Voltage supply	Power over Ethernet (IEEE 802.3af PoE)
Power consumption	32 W
Installation type	Threaded mounting M22
Dimensions without thread	534.1 mm × 325.6 mm × 26.5 mm
Thread length	17 mm
Weight	6.0 kg
Protection type	IP67 (suitable accessories and suitable cables required)
Operating temperature range	-20 to +55 °C (vertical mounting)
Storage temperature range	-30 to +80 °C
Resistance to climatic conditions	Relative humidity 5 to 85 %, non-condensing
Approvals	cULus
Model (www.exorint.com)	JSmart721

The complete technical data as well as further technical information can be found in the manufacturer's original documents (www.exorint.com).

JUMO GmbH & Co. KG
Delivery address: Mackenrodtstraße 14
36039 Fulda, Germany
Postal address: 36035 Fulda, Germany
Phone: +49 661 6003-0
Fax: +49 661 6003-607
Email: mail@jumo.net
Internet: www.jumo.net

JUMO Instrument Co. Ltd.
JUMO House
Temple Bank, Riverway
Harlow, Essex, CM20 2DY, UK
Phone: +44 1279 63 55 33
Fax: +44 1279 62 50 29
Email: sales@jumo.co.uk
Internet: www.jumo.co.uk

JUMO Process Control, Inc.
6733 Myers Road
East Syracuse, NY 13057, USA
Phone: +1 315 437 5866
Fax: +1 315 437 5860
Email: info.us@jumo.net
Internet: www.jumousa.com

EXOR eSMART eXES

eX04ES – Type 705070/4-x-01-...

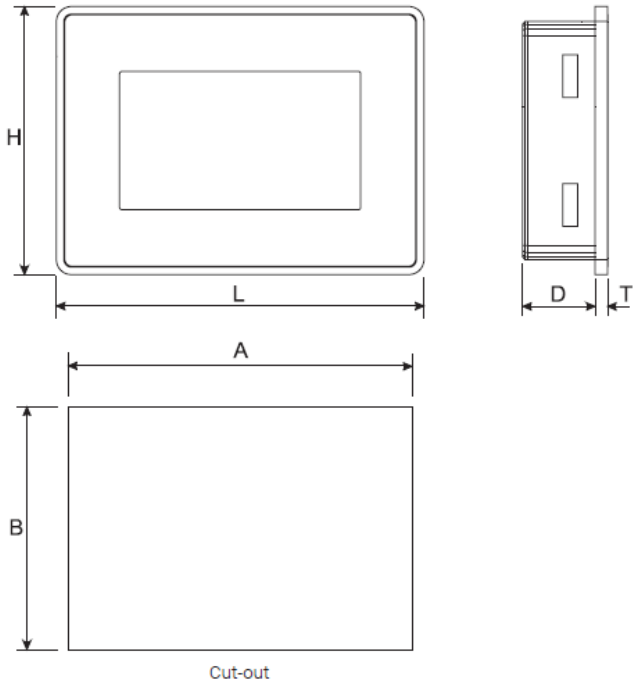

Screen type	TFT color screen
Touch technology	Resistive
Screen size (diagonal)	Approx. 10.9 cm (4.3")
Resolution	480 × 272
Number of colors	64k
Brightness (luminance) typ.	200 cd/m^2
Backlight	LED (dimmable)
Interfaces	1 × Ethernet, 1 × USB host, 1 × serial
Voltage supply	DC 24 V (10 to 32 V)
Current consumption	0.25 A at DC 24 V
Installation type	Installation in panel cut-out
Dimensions L × H × (D + T)	147 mm × 107 mm × (29 + 5) mm
Front panel depth T	5 mm
Mounting depth D	29 mm
Panel cut-out A × B	136 mm × 96 mm
Weight	Approx. 0.4 kg
Protection type	IP66 (front side), IP20 (rear side)
Operating temperature range	0 to 50 °C (vertical mounting)
Storage temperature range	-20 to +70 °C
Resistance to climatic conditions	Relative humidity 5 to 85 %, non-condensing
Approvals	cULus, DNV GL
Model (www.exorint.com)	eSMART04M

The complete technical data as well as further technical information can be found in the manufacturer's original documents (www.exorint.com).

JUMO GmbH & Co. KG
Delivery address: Mackenrodtstraße 14
36039 Fulda, Germany
Postal address: 36035 Fulda, Germany
Phone: +49 661 6003-0
Fax: +49 661 6003-607
Email: mail@jumo.net
Internet: www.jumo.net

JUMO Instrument Co. Ltd.
JUMO House
Temple Bank, Riverway
Harlow, Essex, CM20 2DY, UK
Phone: +44 1279 63 55 33
Fax: +44 1279 62 50 29
Email: sales@jumo.co.uk
Internet: www.jumo.co.uk

JUMO Process Control, Inc.
6733 Myers Road
East Syracuse, NY 13057, USA
Phone: +1 315 437 5866
Fax: +1 315 437 5860
Email: info.us@jumo.net
Internet: www.jumousa.com

eX07ES – Type 705070/4-x-13-...

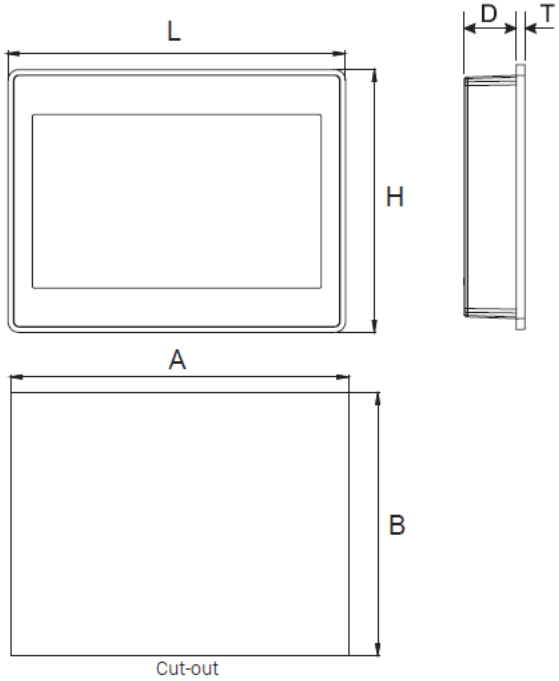

Screen type	TFT color screen
Touch technology	Resistive
Screen size (diagonal)	Approx. 17.8 cm (7")
Resolution	800 × 480
Number of colors	64k
Brightness (luminance) typ.	200 cd/m^2
Backlight	LED (dimmable)
Interfaces	1 × Ethernet, 1 × USB host, 1 × serial
Voltage supply	DC 24 V (10 to 32 V)
Current consumption	0.3 A at DC 24 V
Installation type	Installation in panel cut-out
Dimensions L × H × (D + T)	187 mm × 147 mm × (29 + 5) mm
Front panel depth T	5 mm
Mounting depth D	29 mm
Panel cut-out A × B	176 mm × 136 mm
Weight	Apprpx. 0.6 kg
Protection type	IP66 (front side), IP20 (rear side)
Operating temperature range	0 to 50 °C (vertical mounting)
Storage temperature range	-20 to +70 °C
Resistance to climatic conditions	Relative humidity 5 to 85 %, non-condensing
Approvals	cULus, DNV GL
Model (www.exorint.com)	eSMART07M

The complete technical data as well as further technical information can be found in the manufacturer's original documents (www.exorint.com).

JUMO GmbH & Co. KG
Delivery address: Mackenrodtstraße 14
36039 Fulda, Germany
Postal address: 36035 Fulda, Germany
Phone: +49 661 6003-0
Fax: +49 661 6003-607
Email: mail@jumo.net
Internet: www.jumo.net

JUMO Instrument Co. Ltd.
JUMO House
Temple Bank, Riverway
Harlow, Essex, CM20 2DY, UK
Phone: +44 1279 63 55 33
Fax: +44 1279 62 50 29
Email: sales@jumo.co.uk
Internet: www.jumo.co.uk

JUMO Process Control, Inc.
6733 Myers Road
East Syracuse, NY 13057, USA
Phone: +1 315 437 5866
Fax: +1 315 437 5860
Email: info.us@jumo.net
Internet: www.jumousa.com

eX10ES – Type 705070/4-x-23-...

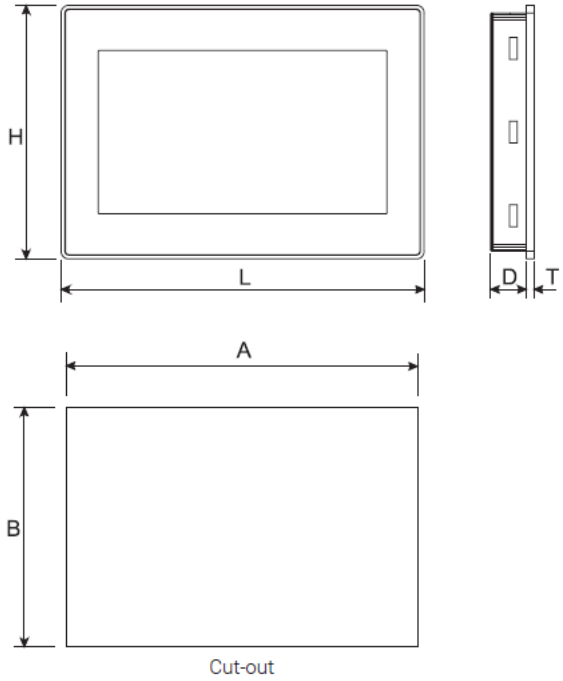

Screen type	TFT color screen
Touch technology	Resistive
Screen size (diagonal)	Approx. 25.7 cm (10.1")
Resolution	1024 × 600
Number of colors	64k
Brightness (luminance) typ.	200 cd/m^2
Backlight	LED (dimmable)
Interfaces	1 × Ethernet, 1 × USB host, 1 × serial
Voltage supply	DC 24 V (10 to 32 V)
Current consumption	0.38 A at DC 24 V
Installation type	Installation in panel cut-out
Dimensions L × H × (D + T)	282 mm × 197 mm × (29 + 6) mm
Front panel depth T	6 mm
Mounting depth D	29 mm
Panel cut-out A × B	271 mm × 186 mm
Weight	Approx. 1.0 kg
Protection type	IP66 (front side), IP20 (rear side)
Operating temperature range	0 to 50 °C (vertical mounting)
Storage temperature range	-20 to +70 °C
Resistance to climatic conditions	Relative humidity 5 to 85 %, non-condensing
Approvals	cULus, DNV GL
Model (www.exorint.com)	eSMART10

The complete technical data as well as further technical information can be found in the manufacturer's original documents (www.exorint.com).

JUMO GmbH & Co. KG
Delivery address: Mackenrodtstraße 14
36039 Fulda, Germany
Postal address: 36035 Fulda, Germany
Phone: +49 661 6003-0
Fax: +49 661 6003-607
Email: mail@jumo.net
Internet: www.jumo.net

JUMO Instrument Co. Ltd.
JUMO House
Temple Bank, Riverway
Harlow, Essex, CM20 2DY, UK
Phone: +44 1279 63 55 33
Fax: +44 1279 62 50 29
Email: sales@jumo.co.uk
Internet: www.jumo.co.uk

JUMO Process Control, Inc.
6733 Myers Road
East Syracuse, NY 13057, USA
Phone: +1 315 437 5866
Fax: +1 315 437 5860
Email: info.us@jumo.net
Internet: www.jumousa.com

tci

E07A-XI – Type 705070/5-x-14-...

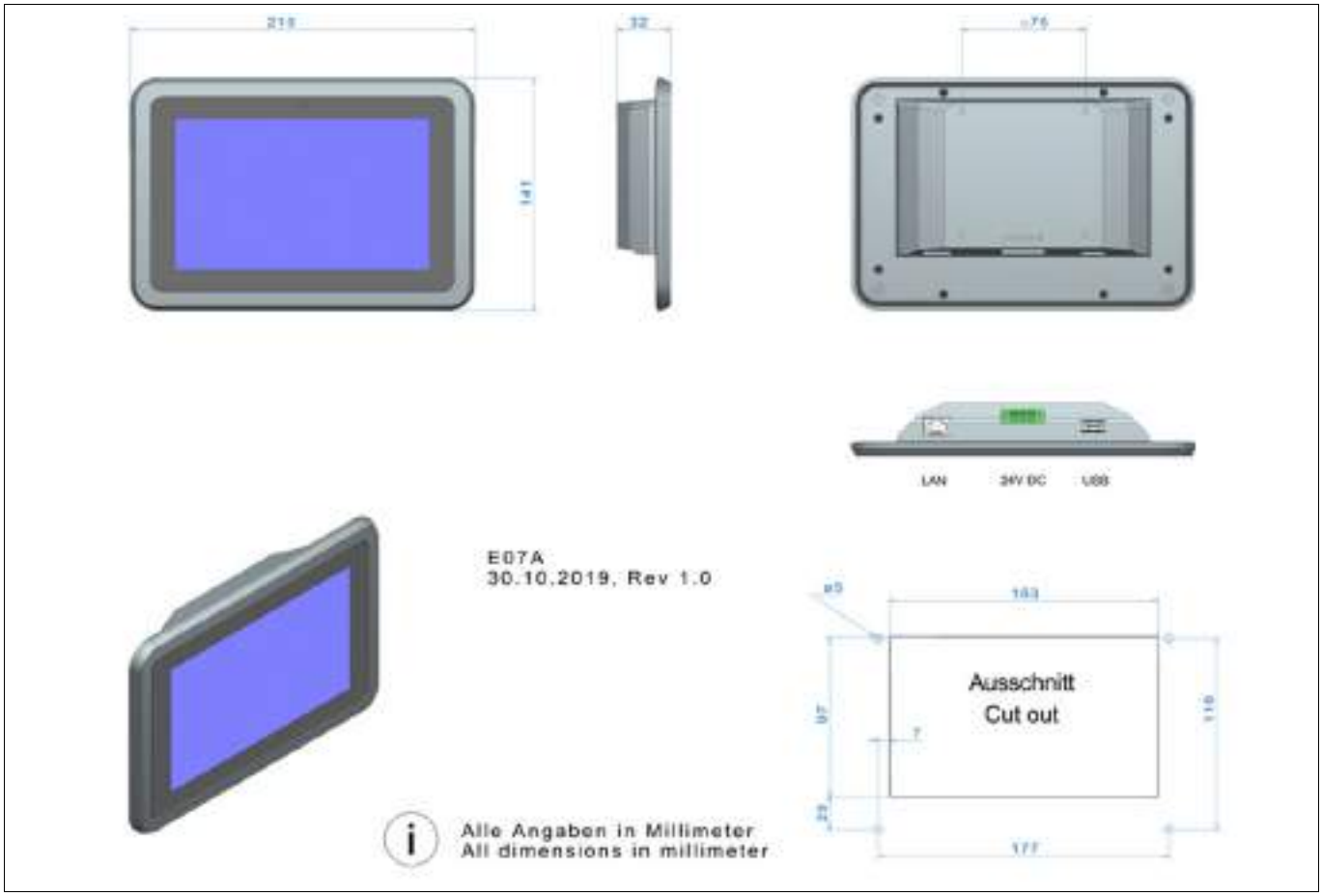

Screen type	TFT color screen
Touch technology	Capacitive, multi-touch operation
Screen size (diagonal)	Approx. 17.8 cm (7")
Resolution	1024 × 600
Backlight	LED
Interfaces	1 × Ethernet, 1 × USB host
Voltage supply	DC 24 V
Installation type	Installation in panel cut-out (or VESA 75 fastening)
Dimensions	210 mm × 141 mm × 32 mm
Panel cut-out	163 mm × 97 mm
Weight	Approx. 0.45 kg
Protection type	At the front IP54, at the rear IP20
Operating temperature range	0 to 60 °C[a]
Storage temperature range	0 to 70 °C
Resistance to climatic conditions	Relative humidity 10 to 90 %, non-condensing
Approvals	Not available
Model (www.tci.de)	E07A-XI

[a] Depending on components, cooling concept and equipment.

The complete technical data as well as further technical information can be found in the manufacturer's original documents (www.tci.de).

JUMO GmbH & Co. KG
Delivery address: Mackenrodtstraße 14
36039 Fulda, Germany
Postal address: 36035 Fulda, Germany
Phone: +49 661 6003-0
Fax: +49 661 6003-607
Email: mail@jumo.net
Internet: www.jumo.net

JUMO Instrument Co. Ltd.
JUMO House
Temple Bank, Riverway
Harlow, Essex, CM20 2DY, UK
Phone: +44 1279 63 55 33
Fax: +44 1279 62 50 29
Email: sales@jumo.co.uk
Internet: www.jumo.co.uk

JUMO Process Control, Inc.
6733 Myers Road
East Syracuse, NY 13057, USA
Phone: +1 315 437 5866
Fax: +1 315 437 5860
Email: info.us@jumo.net
Internet: www.jumousa.com

E10A-XI – Type 705070/5-x-24-...

Screen type	TFT color screen
Touch technology	Capacitive, multi-touch operation
Screen size (diagonal)	Approx. 25.4 cm (10")
Resolution	1024 × 600
Backlight	LED
Interfaces	1 × Ethernet, 1 × USB host, 1 × USB device, 1 × serial
Voltage supply	DC 24 V
Installation type	Installation in panel cut-out (or VESA 75 fastening)
Dimensions	282 mm × 185 mm × 35 mm
Panel cut-out	260 mm × 163 mm
Weight	Approx. 1.0 kg
Protection type	At the front IP54, at the rear IP20
Operating temperature range	0 to 50 °C[a]
Storage temperature range	0 to 70 °C
Resistance to climatic conditions	Relative humidity 10 to 90 %, non-condensing
Approvals	cULus
Model (www.tci.de)	E10A-XI

[a] Depending on components, cooling concept and equipment.

The complete technical data as well as further technical information can be found in the manufacturer's original documents (www.tci.de).

JUMO GmbH & Co. KG
Delivery address: Mackenrodtstraße 14
36039 Fulda, Germany
Postal address: 36035 Fulda, Germany
Phone: +49 661 6003-0
Fax: +49 661 6003-607
Email: mail@jumo.net
Internet: www.jumo.net

JUMO Instrument Co. Ltd.
JUMO House
Temple Bank, Riverway
Harlow, Essex, CM20 2DY, UK
Phone: +44 1279 63 55 33
Fax: +44 1279 62 50 29
Email: sales@jumo.co.uk
Internet: www.jumo.co.uk

JUMO Process Control, Inc.
6733 Myers Road
East Syracuse, NY 13057, USA
Phone: +1 315 437 5866
Fax: +1 315 437 5860
Email: info.us@jumo.net
Internet: www.jumousa.com

Order details

	(1)	**Basic type**
705070		Web panel with TFT-touchscreen
	(2)	**Basic type extension**
1		EXOR Standard eX
2		EXOR Food & Beverage eXFB
3		EXOR JSmart eXJS
4		EXOR eSMART eXES
5		tci E-Serie E-XI
	(3)	**Version**
8		Standard with default settings
	(4)	**Screen size (diagonal)**[a]
03		4.3" eX04ES
10		7" eX707
11		7" eX707FB
12		7" eX707JS
13		7" eX07ES
14		7" E07A-XI
20		10.1" eX710
22		10.1" eX710JS
23		10.1" eX10ES
24		10" E10A-XI
30		15.6" eX715
31		15.6" eX715FB
32		15.6" eX715JS
40		21.5" eX721
42		21.5" eX721JS
	(5)	**Technology**[a]
0		Resistive
1		Capacitive
	(6)	**Voltage supply**[a]
40		IEEE 802.3af PoE
41		DC 24 V
	(7)	**Extra codes**[b]
000		Without approval
061		With UL approval
062		With DNV GL approval

[a] The selection options are dependent on the basic type extension.

[b] The extra codes are dependent on the basic type extension and cannot be selected when ordering.

	(1)		(2)		(3)		(4)		(5)		(6)
Order code	705070	/		-	8	-		-		-	
Order example	705070	/	1	-	8	-	20	-	1	-	36

JUMO GmbH & Co. KG
Delivery address: Mackenrodtstraße 14
36039 Fulda, Germany
Postal address: 36035 Fulda, Germany
Phone: +49 661 6003-0
Fax: +49 661 6003-607
Email: mail@jumo.net
Internet: www.jumo.net

JUMO Instrument Co. Ltd.
JUMO House
Temple Bank, Riverway
Harlow, Essex, CM20 2DY, UK
Phone: +44 1279 63 55 33
Fax: +44 1279 62 50 29
Email: sales@jumo.co.uk
Internet: www.jumo.co.uk

JUMO Process Control, Inc.
6733 Myers Road
East Syracuse, NY 13057, USA
Phone: +1 315 437 5866
Fax: +1 315 437 5860
Email: info.us@jumo.net
Internet: www.jumousa.com

Power supply units 24 V

705090

Brief description

The particular features of these DIN rail power supply units are the high efficiency and the small size. These are achieved by a synchronous rectification and additional new design details.

High immunity to transients and power surges as well as low electromagnetic emission enable its use in almost every environment.

The integrated output power manager, a large input voltage range, and virtually no input inrush current guarantee easy installation and use. A diagnostic is easy due to the potential-free DC-OK contact, a green DC-OK LED, and red overload LED.

Spring-clamp terminals allow a safe and fast installation.

Type 705090/05-33

Type 705090/10-33

Order details

	(1)	**Basic type**
705090		Power supply unit
	(2)	**Output**
05		5 A
10		10 A
	(3)	**Input voltage**
33		AC 100 to 240 V +10/-15 %, 48 to 63 Hz

	(1)		(2)		(3)
Order code		/		-	
Order example	705090	/	05	-	33

Scope of delivery

1 power supply unit in the version ordered
1 instruction manual

Features

- AC 100 to 240 V wide-range input
- Quick-connect spring-clamp terminals
- Robust metal case
- Efficiency up to 93.5 %
- Active Power Factor Correction (PFC)
- 150 % peak load capability
- DNV GL approval (EMC A)
- UL approval

JUMO GmbH & Co. KG
Delivery address: Mackenrodtstraße 14
36039 Fulda, Germany
Postal address: 36035 Fulda, Germany
Phone: +49 661 6003-0
Fax: +49 661 6003-607
Email: mail@jumo.net
Internet: www.jumo.net

JUMO Instrument Co. Ltd.
JUMO House
Temple Bank, Riverway
Harlow, Essex, CM20 2DY, UK
Phone: +44 1279 63 55 33
Fax: +44 1279 62 50 29
Email: sales@jumo.co.uk
Internet: www.jumo.co.uk

JUMO Process Control, Inc.
6733 Myers Road
East Syracuse, NY 13057, USA
Phone: +1 315 437 5866
Fax: +1 315 437 5860
Email: info.us@jumo.net
Internet: www.jumousa.com

Technical data (extract)

		Type 705090/05-33	**Type 705090/10-33**
Article number (www.pulspower.com)		QS5.241	QS10.241
Output voltage	nom.	DC 24 V SELV	
Adjustment range	min.	DC 24 to 28 V	
Output current continuous at DC 24 to 28 V	nom.	5 to 4.5 A	10 to 9 A
Output current for typical 4 s at DC 24 to 28 V	nom.	7.5 to 6.7 A	15 to 13.5 A
Output power continuous at DC 24 V	nom.	120 W	240 W
Output power for typical 4 s at DC 24 V	nom.	180 W	360 W
Output ripple (20 Hz to 20 MHz)	max.	50 mVpp	
Input voltage	nom.	AC 100 to 240 V +10/-15 %	AC 100 to 240 V ±15 %
Mains frequency	nom.	50 to 60 Hz ±6 %	
Input current at AC 120/230 V	typ.	1.10/0.62 A	2.22/1.22 A
Power factor at AC 120/230 V	typ.	0.99/0.91	0.98/0.92
Input inrush current at AC 120/230 V	typ.	9/11 A peak	4/7 A peak
Hold-up time at AC 120/230 V	typ.	34/65 ms	27/28 ms
Efficiency at AC 120/230 V	typ.	91.6/92.7 %	92.6/93.5 %
Power losses at AC 120/230 V	typ.	11.0/9.4 W	20.0/18.1 W
Derating from 60 °C to 70 °C	min.	3 W/°C	6 W/°C
Operational temperature range		-25 to +70 °C	
Storage temperature range		-40 to +85 °C	
Use		Indoor	
Site altitude		Up to 2000 m above sea level	
Dimensions W x H x D	nom.	40 mm x 130.5 mm x 121.5 mm	60 mm x 130.5 mm x 121.5 mm
Weight	max.	620 g	900 g

For the detailed technical data and further technical information please refer to the original manufacturer's data sheet: www.pulspower.com
Deviating from the information in the original data sheet, please note the following: To fulfil the PELV requirements according to EN 60204-1 (section 6.4.1), only the negative (-) pole of the output circuit may be connected to the protective earth system.

Current consumption of the individual modules of the system

Basic type	**Description**	**Current consumption (at DC 19.2 V)**
705001	Central processing unit JUMO mTRON T	Max. 350 mA
705002	Central processing unit JUMO variTRON 500	Max. 1,16 A
705003	Central processing unit JUMO variTRON 300 (available as of system version x)	Max. 280 mA
705010	Multichannel controller module	Max. 300 mA
705015	Relay module 4-channel	120 mA
705020	Analog input module 4-channel	130 mA
705021	Analog input module 8-channel	80 mA
705025	Analog output module 4-channel	240 mA
705030	Digital input/output module 12-channel	90 mA (module electronics only, see data sheet 705030)
705031	Digital input/output module 32-channel	Max. 123 mA (module electronics only, see data sheet 705031)
705040	Router module	100 mA
705041	Router module 2-port	70 mA
705042	Router module 3-port	100 mA
705043	Router module 1-port	30 mA
705060	Multifunction panel 840	Max. 750 mA
705065	Operating panels	Max. 750 mA
705070	Web panels JUMO variTRON	See data sheet 705070

JUMO GmbH & Co. KG
Delivery address: Mackenrodtstraße 14
36039 Fulda, Germany
Postal address: 36035 Fulda, Germany
Phone: +49 661 6003-0
Fax: +49 661 6003-607
Email: mail@jumo.net
Internet: www.jumo.net

JUMO Instrument Co. Ltd.
JUMO House
Temple Bank, Riverway
Harlow, Essex, CM20 2DY, UK
Phone: +44 1279 63 55 33
Fax: +44 1279 62 50 29
Email: sales@jumo.co.uk
Internet: www.jumo.co.uk

JUMO Process Control, Inc.
6733 Myers Road
East Syracuse, NY 13057, USA
Phone: +1 315 437 5866
Fax: +1 315 437 5860
Email: info.us@jumo.net
Internet: www.jumousa.com

JUMO LOGOSCREEN 601

Paperless Recorder with Touchscreen

Type 706521/...

Brief description

The JUMO LOGOSCREEN 601 paperless recorder is characterized by an intuitive, icon-based operation and visualization concept that makes it easy to operate.

Different versions of the JUMO LOGOSCREEN 601 are available for process data recording. The scalability allows for flexible adaptation to various customer requirements: from the device version without measurement input (24 process values via interface) through to different device versions with up to 6 measurement inputs (universal analog inputs), 2 analog outputs, 12 digital inputs, 12 individually switchable digital inputs/outputs. A relay output is available as standard. The version with FDA-compliant data recording fulfills all requirements according to 21 CFR Part 11.

In order to display the recorded data, the JUMO LOGOSCREEN 601 features various visualizations. In addition, the user can use the setup program to create up to 6 separate process screens – with up to 100 objects per process screen – according to his individual requirements. For batch-based processes, a special batch recording is available which enables the storage of additional, batch-related information. The extra code "structured text" allows for the creation of individual measurement and recording applications.

Block diagram

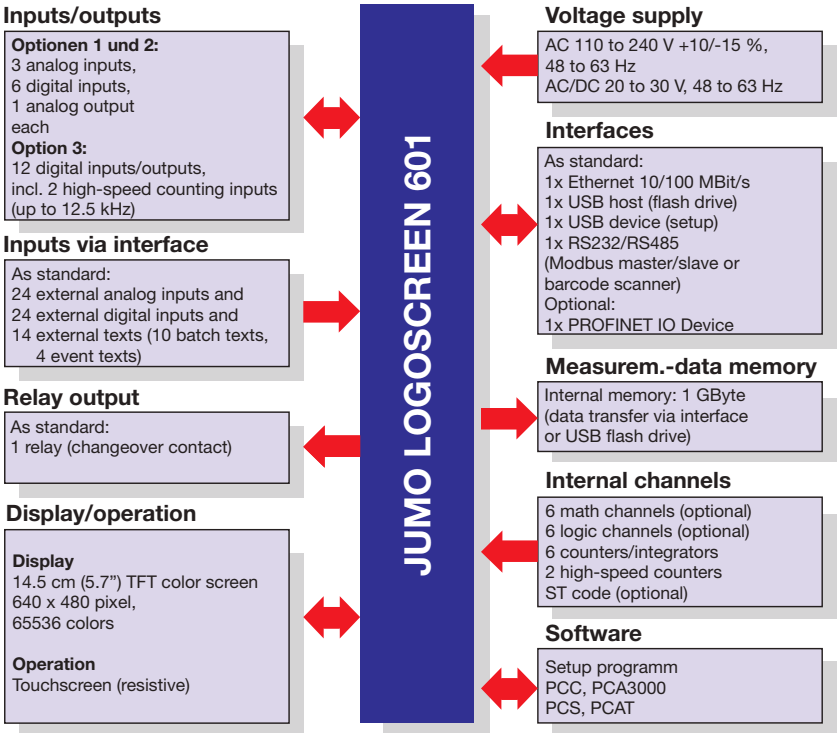

Special features

- Intuitive touch operation
- Up to 2 analog outputs
- Up to 6 customer-specific process screens
- PROFINET IO device interface (extra code)
- Integrated web server for online visualization as on device
- Recording of a batch report
- Limit value monitoring function (24 channels)
- Flow measurement (2 channels, option)
- 2 counter inputs (max. 12.5 kHz, option)
- User-specific application using structured text (ST code; extra code)
- Automatic data readout via PCA Communication Software PCC
- Data recording compliant with FDA 21 CFR Part 11 (extra code)
- Manipulation detection with digital certificate (extra code)
- PC programs for data evaluation and access control
- AMS2750/CQI-9 (extra code)
- Wide operating temperature range

Approvals and approval marks (see "Technical data")

JUMO GmbH & Co. KG
Delivery address: Mackenrodtstraße 14
36039 Fulda, Germany
Postal address: 36035 Fulda, Germany
Phone: +49 661 6003-0
Fax: +49 661 6003-607
Email: mail@jumo.net
Internet: www.jumo.net

JUMO Instrument Co. Ltd.
JUMO House
Temple Bank, Riverway
Harlow, Essex, CM20 2DY, UK
Phone: +44 1279 63 55 33
Fax: +44 1279 62 50 29
Email: sales@jumo.co.uk
Internet: www.jumo.co.uk

JUMO Process Control, Inc.
6733 Myers Road
East Syracuse, NY 13057, USA
Phone: +1 315 437 5866
Fax: +1 315 437 5860
Email: info.us@jumo.net
Internet: www.jumousa.com

Description

Configuration and operation

On the device

The JUMO operation and visualization concept, allows the user to operate the paperless recorder almost intuitively. All operations are performed with an icon-based menu system on the resistive touchscreen.

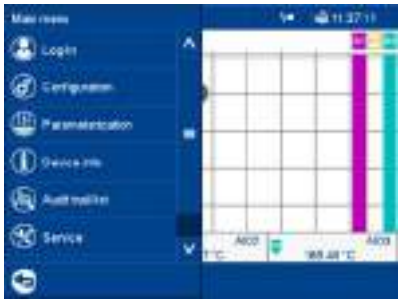

The integrated user management protects the paperless recorder against unauthorized access. The standard version supports up to five users with varying access rights. The extra code 888 (FDA 21 CFR Part 11) allows for up to 50 users to be managed.

With the setup program

The paperless recorder can also be configured using the setup program; it should be noted that some functions are only available in the setup program, such as:

- Editing the operating language
- Assigning user rights
- Creating process screens
- Creating texts (e.g. for batch reports and process screens)

The setup program is installed on a PC with a Windows[1] operating system (7/8/10 – 32 or 64 bit) and communicates with the paperless recorder via USB or Ethernet interface. It is also possible to transfer configuration files to the paperless recorder using a USB flash drive.

[1] Windows is a registered trademark of the Microsoft Corporation.

The user can save the configuration data as a file, which can also be printed out for documentation purposes.

Operating language

Multiple operating languages can be selected on the device. These can be edited and switched using the setup program. The languages German, English, French, Spanish, Czech, Chinese, Russian, and Italian are currently available. Users can also create their own language versions (Unicode compatible).

Process screen editor

The user can use the setup program to create 6 individual process screens which he can subsequently transfer to the paperless recorder and use to display process data and input text and process values there. Each process screen can consist of up to 100 objects (images, analog channels, digital channels, text, etc.).

Interfaces

USB

The paperless recorder is equipped with two USB interfaces as a standard feature. A USB flash drive can be connected to the host interface located on the front. The device interface on the back (Micro-B type) can be used to connect the device to a PC (setup program or PCC/PCA3000).

The USB host interface has a cover so that the front of the device complies with protection type IP66.

Ethernet

The paperless recorder is equipped with an Ethernet interface as a standard feature, which supports the following functions:

- Communication with a PC (setup program, web server, data archiving with PCC/PCA3000)
- Email dispatch via SMTP server
- Time synchronization via SNTP server
- Communication with a Modbus master/slave

The IP address is either configured as a fixed address or received automatically from a DHCP server; DNS is supported.

RS232/RS485

This interface available as a standard feature can be configured as RS232 and RS485. It is used for communicating with a Modbus master or a Modbus slave. It can also be used to connect to a barcode scanner.

PROFINET IO device

The paperless recorder can also be equipped with a PROFINET interface and integrated into a PROFINET network as an IO device as an optional extra. The interface also supports simultaneous use of Ethernet standard services; thus Ethernet interfaces as a standard feature are omitted.

A GSD file (GSDML) is available for the programming system of the IO controller, which describes the features of the paperless recorder.

External inputs via interface

The paperless recorder can access 24 external analog inputs and 24 external digital inputs via the interfaces (Ethernet, RS232/RS485). In addition, 10 texts for batch reports and 4 event texts with a text length of up to 160 characters can be transferred. In doing so the Modbus-TCP/Modbus-RTU (master/slave respectively) reports are used.

These external inputs are also available via the optional PROFINET interface.

Inputs and outputs

The different device versions of the paperless recorder are available with analog and digital inputs and outputs (options).

The analog inputs (max. 6) are universal measurement inputs for RTD temperature probes, thermocouples, resistance transmitters, resistance/potentiometers, and standard signals (current, voltage).

The analog outputs (max. 2) can each be used as voltage output (0 to 10 V) or current output (0/4 to 20 mA).

The digital inputs (max. 12) and the individually switchable digital inputs/outputs (max. 12) are operated with a voltage of DC 0/24 V.

All device versions feature a relay output with changeover contact.

Customer-specific linearization

Sensor signals with special characteristic line characteristics can also be used through customer-specific linearization (e.g. PTC/NTC sensors under consideration of the resistance

JUMO GmbH & Co. KG
Delivery address: Mackenrodtstraße 14
36039 Fulda, Germany
Postal address: 36035 Fulda, Germany
Phone: +49 661 6003-0
Fax: +49 661 6003-607
Email: mail@jumo.net
Internet: www.jumo.net

JUMO Instrument Co. Ltd.
JUMO House
Temple Bank, Riverway
Harlow, Essex, CM20 2DY, UK
Phone: +44 1279 63 55 33
Fax: +44 1279 62 50 29
Email: sales@jumo.co.uk
Internet: www.jumo.co.uk

JUMO Process Control, Inc.
6733 Myers Road
East Syracuse, NY 13057, USA
Phone: +1 315 437 5866
Fax: +1 315 437 5860
Email: info.us@jumo.net
Internet: www.jumousa.com

measuring range). Configuration is carried out in the setup program on the basis of a value table with up to 40 value pairs or through a formula (4th order polynomial).

Data recording

The measured values are recorded continuously with a sampling rate of 125 ms. Report creation and limit value monitoring are performed based on these measured values. The measured values are transferred to the working memory of the device depending on the programmable memory cycle and memory value (current value, average value, maximum value, minimum value, or minimum/maximum values). The paperless recorder stores the data according to group; one input can be assigned to multiple groups (max. 4).

Working memory (SRAM)

The data stored in the SRAM is copied to the internal memory in 20-kByte blocks at regular intervals.

Internal memory (flash)

Whenever a memory block in the working memory is full, it is copied to the internal memory. The internal memory has a maximum capacity of 1 GB. Each write operation is monitored to ensure that any data storage errors are detected immediately.

The device monitors the capacity of the internal memory and, if the remaining capacity falls below the configured minimum, a memory alarm signal is triggered. This can, for example, control the alarm relay.

The data is written to the memory as a ring buffer, which means that when the memory is full, the oldest data is automatically overwritten with new data.

To show the history in the paperless recorder, data from the internal memory can be displayed (history memory: 8 MByte).

Data transfer to PC

Data can be transferred from the paperless recorder to a PC via a USB flash drive or via one of the interfaces (USB device, Ethernet).

Data security

Data is stored in an encrypted format developed by JUMO. This ensures a high level of data security.

The following applies if the paperless recorder is disconnected from the voltage supply:

- Measurement data in the working memory and time are buffered by a lithium battery (operating life > 7 years).
- If the lithium battery is discharged, the measurement data in the working memory and the time are lost. For the purposes of a battery change, the data is buffered for approximately 2 minutes by a storage capacitor.
- Measurement and configuration data in the internal memory are not lost.

Extra code 887 gives the device reliable manipulation detection. A digital device certificate verifies that the recording data in the device has not been manipulated – which also applies to the transfer into the data archive.

Recording time

The maximum recording time depends on a number of factors, in particular on the set memory cycle. The values specified in the table (entries in the event list reduce the maximum recording time) apply when a group with 6 analog channels is activated in standard operation and storage of average values (not the minimum/maximum values).

Memory cycle	Max. recording time
125 ms	Approx. 42 days
1 s	Approx. 8 months
5 s	Approx. 41 months
10 s	Approx. 82 months
60 s	Approx. 493 months

Reports

For each channel in a group, reports can be maintained over specified time periods (maximum, minimum, and average values). Configuration takes place for each group.

Batch report

The paperless recorder allows a batch report to be created for one plant. The measurement data, the beginning, end, and duration of the batch can be displayed together with a batch counter and freely definable texts on the paperless recorder and in the PC Evaluation Software PCA3000. A barcode scanner can also be used to start and stop the batch and to load batch texts.

GPS data recording

GPS data (NMEA 0183 data records) can be received and recorded via the serial interface of the device. The data of the connected GPS receivers (e.g. positioning data) are cyclically entered into the event list (group-related) and can thus be evaluated in conjunction with further registration data.

Operating modes

The operating mode can be selected individually for each group. The memory cycle and memory value can be separately configured for each operating mode. Up to 4 groups can be recorded with one memory cycle of 125 ms.

The operating modes have different priorities:

Event operation

Event operation is activated/deactivated by a control signal (such as a digital input, group, or collective alarm). The device is in event operation for as long as the control signal is active. Event operation has the highest priority.

Time operation

Time operation is active on a daily basis within a programmable timeframe, providing event operation is not active.

Standard operation

If the device is **not** in event or time operation, standard operation is active.

Limit value monitoring

Up to 24 analog values can be monitored by the configurable limit value monitoring function. In the event of deviation above or below the limit value, an alarm signal is generated that can be used for individual purposes (such as switching the operating mode from standard to event operation).

The alarm delay can be used to hide short-term deviations above or below the limit value so that no alarm signal is issued. It is also possible to suppress the alarm signal by a digital signal.

Limit value and switching differential can also be changed as part of parameterization, provided the user has the rights to do this.

Counters/integrators

Six additional internal channels are available as counters, integrators, operating time counters, or to determine the total flow volume. Two high-speed counters (up to 12.5 kHz) can be implemented via the digital inputs/outputs 1 and 2 (option 3). These optional inputs are also required for flow measurement, if the pulses of a flow transmitter are to be evaluated.

The counters are controlled via digital signals (counting pulses), whereas the integrators are controlled via analog signals (value integrated

JUMO GmbH & Co. KG
Delivery address: Mackenrodtstraße 14
36039 Fulda, Germany
Postal address: 36035 Fulda, Germany
Phone: +49 661 6003-0
Fax: +49 661 6003-607
Email: mail@jumo.net
Internet: www.jumo.net

JUMO Instrument Co. Ltd.
JUMO House
Temple Bank, Riverway
Harlow, Essex, CM20 2DY, UK
Phone: +44 1279 63 55 33
Fax: +44 1279 62 50 29
Email: sales@jumo.co.uk
Internet: www.jumo.co.uk

JUMO Process Control, Inc.
6733 Myers Road
East Syracuse, NY 13057, USA
Phone: +1 315 437 5866
Fax: +1 315 437 5860
Email: info.us@jumo.net
Internet: www.jumousa.com

according to the selected time base). Operating time counters determine the timeframe during which a digital signal is active.

The value of the counter/integrator is displayed in a separate window of the paperless recorder in numerical format with a maximum of 9 digits (in the event that this is exceeded, the counter restarts with 0). Different recording periods can be set. A minimum and maximum alarm can be configured for each counter/integrator.

Math and logic module

The math and logic module (each with 6 channels) is available as extra code.

The math function can be used to link various analog and Boolean input variables using a formula which can be defined freely in accordance with mathematical rules (formula with a maximum of 160 ASCII characters). The output variables are real values. As an alternative to entering a formula, the following mathematical functions are already available: difference, ratio, humidity, and floating average.

The logic function allows various Boolean values to be linked using a logic formula (maximum of 600 ASCII characters). The output variables are Boolean values.

The math and logic module can only be configured via the setup program.

Structured text

The user has the option to create his/her own application using the "Structured text" option (extra code).

The application with the ST editor, which is part of the setup program, is created in the PLC programming language "Structured text". The finished application is transmitted to the device and continuously processed there. There are online-debugger functions available in the ST editor for testing and troubleshooting.

FDA-compliant data recording

Extra code 888 allows the paperless recorder to fully meet FDA requirements in accordance with 21 CFR Part 11. User management and startup require the PC software package (including PCS and PCAT).

The device supports up to 50 users with specific rights. The user has the option to provide a completed batch or the recording data of a certain time range with their electronic signature. A logged-in user can also provide their signature during logoff – it applies to the entire time period for which the user was logged in.

Visualization on the device

Various display types are available to visualize the measurement data on the paperless recorder. The visualization screen after power-on-reset can be selected in the configuration, as can the screen that appears when the home button is pressed.

The colors of the individual channels and the background color of the analog curves and the digital traces can be set.

Vertical diagram

- Analog curves and digital traces running from top to bottom
- Up to 6 analog and 6 digital channels in one group can be shown on one screen
- Group rotation (max. 4, also with maximum memory cycle)
- Digital traces can be hidden
- Channel information (short description of signal, analog value) can be hidden
- Auxiliary lines can be shown and hidden

Horizontal diagram

- Analog curves and digital traces running from right to left
- Digital traces and channel information can be hidden
- Auxiliary lines can be shown and hidden

Digital diagram

- Up to 6 digital channels in one group on one screen
- Vertical display (digital traces running from top to bottom)
- Horizontal display (digital traces running from right to left)

Bar graph display

- Up to 6 analog channels in one group as a bar graph on one screen
- Display of scaling and limit values
- Configurable bar color and background color
- Additional display of up to 6 digital channels in one group as a symbol B1 to B6

JUMO GmbH & Co. KG
Delivery address: Mackenrodtstraße 14
36039 Fulda, Germany
Postal address: 36035 Fulda, Germany
Phone: +49 661 6003-0
Fax: +49 661 6003-607
Email: mail@jumo.net
Internet: www.jumo.net

JUMO Instrument Co. Ltd.
JUMO House
Temple Bank, Riverway
Harlow, Essex, CM20 2DY, UK
Phone: +44 1279 63 55 33
Fax: +44 1279 62 50 29
Email: sales@jumo.co.uk
Internet: www.jumo.co.uk

JUMO Process Control, Inc.
6733 Myers Road
East Syracuse, NY 13057, USA
Phone: +1 315 437 5866
Fax: +1 315 437 5860
Email: info.us@jumo.net
Internet: www.jumousa.com

Text image

- Numerical display of the measured values from up to 6 analog channels in one group
- Additional display of up to 6 digital channels in one group as a symbol B1 to B6
- Analog channels can be displayed individually

Text image – individual display

- Analog signal also as bar graph with limit values
- Color change in case of an alarm
- Alarm text display

Report

- Display of minimum, maximum, and average value of each analog channel in a group
- Various reporting periods
- Separate report for each group
- Display of current and completed reports

Batch report

- Logging of a batch recording
- Display of the completed batch as a report or curve diagram

Counter/integrator

- Display of the current and the completed counter/integrator
- Status of the counter/integrator with start and stop time
- Bar graph display of the current status with limit values

Process screen

- Display of process data (analog and digital signals) and texts as well as text and value entry
- Up to 6 process screens each with 100 objects
- Library with pictograms (also possible to import own images)
- Individual configuration using the setup program

Web server

The paperless recorder is equipped with a web server function as a standard feature.

The web server allows the user to display certain settings, process values, and messages using a web browser:

- Parameters of the user level
- Default visualizations
- Individual process screen
- Data of the recording function (including history)
- Alarm and event list

The display depends on the web browser used and the PC operating system.

JUMO GmbH & Co. KG
Delivery address: Mackenrodtstraße 14
36039 Fulda, Germany
Postal address: 36035 Fulda, Germany
Phone: +49 661 6003-0
Fax: +49 661 6003-607
Email: mail@jumo.net
Internet: www.jumo.net

JUMO Instrument Co. Ltd.
JUMO House
Temple Bank, Riverway
Harlow, Essex, CM20 2DY, UK
Phone: +44 1279 63 55 33
Fax: +44 1279 62 50 29
Email: sales@jumo.co.uk
Internet: www.jumo.co.uk

JUMO Process Control, Inc.
6733 Myers Road
East Syracuse, NY 13057, USA
Phone: +1 315 437 5866
Fax: +1 315 437 5860
Email: info.us@jumo.net
Internet: www.jumousa.com

PC programs

With basic type extension 1, the paperless recorder will come with a software package consisting of the following PC programs: setup, PCC, and PCA3000. With extra code 888 the software package also includes the PC programs PCS and PCAT (see order details).

PCA communication software PCC

The PCA Communication Software PCC is a PC program for Windows operating systems (7/8/10 – 32/64 bit) for extracting data from the paperless recorder.

- The data can be extracted with a USB flash drive or via an interface (USB device, Ethernet).
- The data can be extracted manually or automatically (for example, every day at 11 pm).

PC Evaluation Software PCA3000

The PC Evaluation Software PCA3000 is a PC program for Windows operating systems (7/8/10 – 32/64 bit) for managing, archiving, visualizing, and evaluating the data from the paperless recorder.

- The data from differently configured devices is detected by the PC Evaluation Software and stored in an archive database. Management is performed fully automatically. All the user has to do is manually enter an ID (additional description).
- The user can access certain data records which are recognizable due to the ID, at any time. The time ranges to be evaluated can also be restricted.
- Any analog and digital channels of a paperless recorder (even from different groups) can be subsequently combined in so-called PCA groups in PCA3000.
- Since each group is shown in its own window, several groups can be displayed on the screen in parallel and compared.
- Using the export filter, it is possible to export the stored data in order to process it in other programs, such as Excel.
- The PC Evaluation Software PCA3000 is network compatible, which means that several users can read the data from the same archived file (*.177) in a network directory independently of one another.
- Batch data or even reports can be automatically printed or made available in the network as PDF files, using the "automatic printout" PCA3000 option in conjunction with the PCC software. The output forms used can be customized.

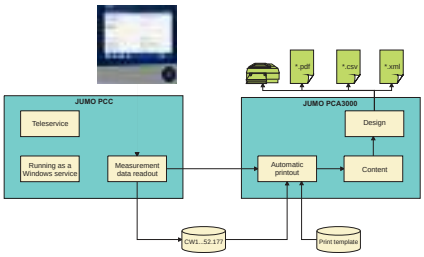

PC Security Manager PCS

Software for administration of device user access control. This software is only accessible to administrators.

The PCS software can only be used for devices with extra code 888, for managing device users.

PC Audit Trail Manager PCAT

Software for the documentation of PC operational actions that could lead to alterations in data recording.

JUMO GmbH & Co. KG
Delivery address: Mackenrodtstraße 14
36039 Fulda, Germany
Postal address: 36035 Fulda, Germany
Phone: +49 661 6003-0
Fax: +49 661 6003-607
Email: mail@jumo.net
Internet: www.jumo.net

JUMO Instrument Co. Ltd.
JUMO House
Temple Bank, Riverway
Harlow, Essex, CM20 2DY, UK
Phone: +44 1279 63 55 33
Fax: +44 1279 62 50 29
Email: sales@jumo.co.uk
Internet: www.jumo.co.uk

JUMO Process Control, Inc.
6733 Myers Road
East Syracuse, NY 13057, USA
Phone: +1 315 437 5866
Fax: +1 315 437 5860
Email: info.us@jumo.net
Internet: www.jumousa.com

Technical data

Analog inputs

General

Number	Max. 6 (see connection diagram)
A/D converter	24 bit delta-sigma
Sampling rate	Up to 6 channels: 125 ms
Input filter	Digital filter, 2nd order; filter constant can be set from 0 to 100.0 s
Galvanic isolation	See "Galvanic isolation"

Thermocouples

Designation	Type	Standard	ITS	Measuring range	Accuracy[a]
Fe-CuNi	"L"	DIN 43710 (1985)	IPTS-68	-200 to +900 °C	≤ 0.1 %
Fe-CuNi	"J"	DIN EN 60584-1:2014 IEC 60584-1:2013	ITS-90	-210 to +1200 °C	≤ 0.1 % from -100 °C
Cu-CuNi	"U"	DIN 43710 (1985)	IPTS-68	-200 to +600 °C	≤ 0.1 % from -100 °C
Cu-CuNi	"T"	DIN EN 60584-1:2014 IEC 60584-1:2013	ITS-90	-270 to +400 °C	≤ 0.1 % from -150 °C
NiCr-Ni	"K"	DIN EN 60584-1:2014 IEC 60584-1:2013	ITS-90	-270 to +1300 °C	≤ 0.1 % from -80 °C
NiCr-CuNi	"E"	DIN EN 60584-1:2014 IEC 60584-1:2013	ITS-90	-270 to +1000 °C	≤ 0.1 % from -80 °C
NiCrSi-NiSi	"N"	DIN EN 60584-1:2014 IEC 60584-1:2013	ITS-90	-270 to +1300 °C	≤ 0.1 % from -80 °C
Pt10Rh-Pt	"S"	DIN EN 60584-1:2014 IEC 60584-1:2013	ITS-90	-50 to +1768 °C	≤ 0.15 % from 100 °C
Pt13Rh-Pt	"R"	DIN EN 60584-1:2014 IEC 60584-1:2013	ITS-90	-50 to +1768 °C	≤ 0.15 % from 100 °C
Pt30Rh-Pt6Rh	"B"	DIN EN 60584-1:2014 IEC 60584-1:2013	ITS-90	0 to 1820 °C	≤ 0.15 % from 600 °C
W5Re-W26Re	"C"	DIN EN 60584-1:2014 IEC 60584-1:2013	ITS-90	0 to 2315 °C	≤ 0.1 % from 500 °C
W3Re-W25Re	"D"	ASTM E1751M-15	ITS-90	0 to 2315 °C	≤ 0.1 % from 500 °C
W5Re-W20Re	"A1"	GOST R 8.585-2001	ITS-90	0 to 2500 °C	≤ 0.1 % from 500 °C
Chromel®-Copel	"L"	GOST R 8.585-2001	ITS-90	-200 to +800 °C	≤ 0.1 % from -80°C
Chromel®-Alumel®	"K"	GOST R 8.585-2001	ITS-90	-270 to +1372 °C	≤ 0.1 % from -80 °C
PLII (Platinel® II)		ASTM E1751M-15	ITS-90	0 to 1395 °C	≤ 0.1 %

Ambient temperature influence	≤ 100 ppm/K
Cold junction	Internal (Pt100) or external (constant)
Cold junction accuracy (internal)	± 1 K
Cold junction temperature (external)	-30 to +85 °C (adjustable)
Base measuring range	-20 to +70 mV

[a] Accuracy refers to the measuring range

JUMO GmbH & Co. KG
Delivery address: Mackenrodtstraße 14
36039 Fulda, Germany
Postal address: 36035 Fulda, Germany
Phone: +49 661 6003-0
Fax: +49 661 6003-607
Email: mail@jumo.net
Internet: www.jumo.net

JUMO Instrument Co. Ltd.
JUMO House
Temple Bank, Riverway
Harlow, Essex, CM20 2DY, UK
Phone: +44 1279 63 55 33
Fax: +44 1279 62 50 29
Email: sales@jumo.co.uk
Internet: www.jumo.co.uk

JUMO Process Control, Inc.
6733 Myers Road
East Syracuse, NY 13057, USA
Phone: +1 315 437 5866
Fax: +1 315 437 5860
Email: info.us@jumo.net
Internet: www.jumousa.com

RTD temperature probe

Designation	Standard	ITS	Measuring range	Accuracy[a]	Measuring current
Pt50	DIN EN 60751:2009 IEC 60751:2008	ITS-90	-200 to +850 °C	≤ 0.1 %	500 µA
Pt100	DIN EN 60751:2009 IEC 60751:2008	ITS-90	-200 to +850 °C	≤ 0.1 %	500 µA
Pt500	DIN EN 60751:2009 IEC 60751:2008	ITS-90	-200 to +850 °C	≤ 0.1 %	50 µA
Pt1000	DIN EN 60751:2009 IEC 60751:2008	ITS-90	-200 to +850 °C	≤ 0.1 %	50 µA
Pt100	JIS C 1604:1981	IPTS-68	-200 to +649 °C	≤ 0.1 %	500 µA
Pt50	GOST 6651-2009 A.2	ITS-90	-200 to +850 °C	≤ 0.1 %	500 µA
Pt100	GOST 6651-2009 A.2	ITS-90	-200 to +850 °C	≤ 0.1 %	500 µA
Cu50	GOST 6651-2009 A.3	ITS-90	-180 to +200 °C	≤ 0.4 %	500 µA
Cu100	GOST 6651-2009 A.3	ITS-90	-180 to +200 °C	≤ 0.4 %	500 µA
Ni100	DIN 43760 (1987)	IPTS-68	-60 to +250 °C	≤ 0.2 %	500 µA
Ni100	GOST 6651-2009 A.5	ITS-90	-60 to +180 °C	≤ 0.2 %	500 µA

Connection type	2/3/4-wire
Ambient temperature influence	≤ 50 ppm/K
Sensor line resistance	Max. 10 Ω per cable for two-wire circuit Max. 30 Ω per cable for three/four-wire circuit

[a] Accuracy refers to the measuring range.

Resistance transmitter and resistance/potentiometer

Designation	Measuring range	Accuracy[a]	Measuring current
Resistance transmitter	0 to 4000 Ω	≤ 0.1 %	50 µA
Resistance/potentiometer	0 to 400 Ω	≤ 0.1 %	500 µA
	0 to 4000 Ω	≤ 0.1 %	50 µA

Ambient temperature influence	≤ 100 ppm/K
Connection type	
Resistance transmitter	Three-wire circuit
Resistance/potentiometer	Two/three/four-wire circuit
Smallest measuring span	60 Ω
Sensor line resistance	Max. 10 Ω per cable for two-wire and three-wire circuits
Resistance values	Freely programmable within the limits, in increments of 0.1 Ω

[a] Accuracy refers to the maximum measuring range. Small measuring spans lead to reduced linearization accuracy.

JUMO GmbH & Co. KG
Delivery address: Mackenrodtstraße 14
36039 Fulda, Germany
Postal address: 36035 Fulda, Germany
Phone: +49 661 6003-0
Fax: +49 661 6003-607
Email: mail@jumo.net
Internet: www.jumo.net

JUMO Instrument Co. Ltd.
JUMO House
Temple Bank, Riverway
Harlow, Essex, CM20 2DY, UK
Phone: +44 1279 63 55 33
Fax: +44 1279 62 50 29
Email: sales@jumo.co.uk
Internet: www.jumo.co.uk

JUMO Process Control, Inc.
6733 Myers Road
East Syracuse, NY 13057, USA
Phone: +1 315 437 5866
Fax: +1 315 437 5860
Email: info.us@jumo.net
Internet: www.jumousa.com

Voltage, current (standard signals)

Designation	Measuring range	Accuracy[a]	Input resistance or burden voltage
Voltage	0 to 70 mV	≤ 0.1 %	> 500 kΩ
	0 to 10 V	≤ 0.05 %	> 500 kΩ
	-10 to +10 V	≤ 0.05 %	> 500 kΩ
	-1 to +1 V	≤ 0.08 %	> 500 kΩ
	0 to 1 V	≤ 0.08 %	> 500 kΩ
Current	4 to 20 mA	≤ 0.1 %	< 2 V
	0 to 20 mA	≤ 0.1 %	< 2 V
Ambient temperature influence	≤ 100 ppm/K		
Smallest measuring span Voltage Current	 5 mV 0.5 mA		
Measuring range start/end Voltage Current	 Freely programmable within the limits, in increments of 0.01 mV Freely programmable within the limits, in increments of 0.01 mA		
Deviation below/above the measur. range	According to NAMUR recommendation NE 43 (only current input 4 to 20 mA)		

[a] Accuracy refers to the maximum measuring range. Small measuring spans lead to reduced linearization accuracy.

Measuring circuit monitoring

The device behavior in the event of a malfunction is configurable.

Measuring probe	Probe break	Short-circuit	Polarity
Thermocouple	Is detected	Is not detected	Is detected in certain conditions[a]
RTD temperature probe	Is detected	Is detected	Is not detected
Resistance transmitter	Is detected	Is not detected	Is not detected
Resistance/potentiometer	Is detected	Is not detected	Is not detected
Voltage 0 to 70 mV	Is detected	Is not detected	Is detected
Voltage 0 to 10 V	Is not detected	Is not detected	Is detected
Voltage -10 to +10 V	Is not detected	Is not detected	Is not detected
Voltage 0 to 1 V	Is detected	Is not detected	Is detected
Voltage -1 to +1 V	Is detected	Is not detected	Is not detected
Current 0 to 20 mA	Is not detected	Is not detected	Is not detected
Current 4 to 20 mA	Is detected	Is detected	Is detected

[a] Dependent on the set characteristic line

Analog outputs

Number	Max. 2 (see connection diagram)
Voltage Output signal Load resistance	 DC 0 to 10 V > 500 Ω
Current Output signal Load resistance	 DC 0(4) to 20 mA < 450 Ω
Accuracy	0.5 %
Ambient temperature influence	150 ppm/K

JUMO GmbH & Co. KG
Delivery address: Mackenrodtstraße 14
36039 Fulda, Germany
Postal address: 36035 Fulda, Germany
Phone: +49 661 6003-0
Fax: +49 661 6003-607
Email: mail@jumo.net
Internet: www.jumo.net

JUMO Instrument Co. Ltd.
JUMO House
Temple Bank, Riverway
Harlow, Essex, CM20 2DY, UK
Phone: +44 1279 63 55 33
Fax: +44 1279 62 50 29
Email: sales@jumo.co.uk
Internet: www.jumo.co.uk

JUMO Process Control, Inc.
6733 Myers Road
East Syracuse, NY 13057, USA
Phone: +1 315 437 5866
Fax: +1 315 437 5860
Email: info.us@jumo.net
Internet: www.jumousa.com

Digital inputs

Number	Max. 12 (see connection diagram)
Input	
Level	Logic level 0: < 3.5 V; logic level 1: > 10 V
Sampling rate	125 ms (max. counting frequency: 4 Hz)
Potential-free contact	R_{ON}: < 1 kΩ; R_{OFF}: > 50 kΩ (use of auxiliary voltage 24 V)
Auxiliary voltage supply	
Voltage	DC 24 V +10/-15 %
Current	Max. 50 mA per slot

Digital inputs/outputs

Number	Max. 12 (see connection diagram)
Input or output	Individually configurable as input or output
Input	
Level	Logic level 0: < 3.5 V; logic level 1: > 10 V
Sampling rate	125 ms (max. counting frequency: 4 Hz)
Potential-free contact	R_{ON}: < 1 kΩ; R_{OFF}: > 50 kΩ (use of auxiliary voltage 24 V)
High-speed input	
Usable inputs	1, 2 (see connection diagram)
Function	Counts each positive edge of the input signal
Max. counting frequency	12.5 kHz
Mark-to-space ratio	30 to 70 % (high-pulse ≥ 30 µs, low-pulse ≥ 30 µs)
Accuracy for flow measurement	0.5 % of measured value; ambient temperature influence: 50 ppm/K
Output	
Output signal	DC 0/24 V +10/-15 %; galvanically isolated
Current	Max. 40 mA per output, max. 100 mA in total (including auxiliary voltage supply current)
Auxiliary voltage supply	
Voltage	DC 24 V +10/-15 %
Current	Max. 100 mA (including digital outputs current)

Relays

Number	1 (see connection diagram)
Relay (changeover contact)	
Switching capacity	3 A at AC 230 V or DC 30 V, resistive load
Contact life	30,000 switching operations at rated load

JUMO GmbH & Co. KG
Delivery address: Mackenrodtstraße 14
36039 Fulda, Germany
Postal address: 36035 Fulda, Germany
Phone: +49 661 6003-0
Fax: +49 661 6003-607
Email: mail@jumo.net
Internet: www.jumo.net

JUMO Instrument Co. Ltd.
JUMO House
Temple Bank, Riverway
Harlow, Essex, CM20 2DY, UK
Phone: +44 1279 63 55 33
Fax: +44 1279 62 50 29
Email: sales@jumo.co.uk
Internet: www.jumo.co.uk

JUMO Process Control, Inc.
6733 Myers Road
East Syracuse, NY 13057, USA
Phone: +1 315 437 5866
Fax: +1 315 437 5860
Email: info.us@jumo.net
Internet: www.jumousa.com

Interfaces

RS232/RS485	
Number	1 (can be switched between RS232 and RS485)
Connector type	SUB-D 9-pin (socket)
Baud rate	4800, 9600, 19200, 38400, 115200
Data format	8/1n, 8/1e, 8/1o
Protocol	Modbus RTU as master or slave, barcode scanner, NMEA 0183
Application	Communication with Modbus master/slave, connection of a barcode scanner or a GPS receiver
External inputs	Via Modbus master/slave functionality: 24 analog and 24 digital inputs, 10 batch texts, 4 event texts
Ethernet	
Number	1 (alternative to PROFINET interface)
Connector type	RJ45 (socket)
Transfer rate	10 Mbit/s, 100 Mbit/s
Protocol	IPv4; TCP, UDP; DHCP, DNS, HTTP, SMTP, SNTP, Modbus-TCP
Application	Communication with PC (setup program, data archiving, web server), email server, SNTP server, and Modbus master/slave
External inputs	Via Modbus master/slave functionality: 24 analog and 24 digital inputs, 10 batch texts, 4 event texts
Max. cable length	100 m
PROFINET IO device	
Number	1 (alternative to Ethernet interface)
Connector type	2 x RJ45 (socket), integrated switch
Transfer rate	100 Mbit/s
Conformity class	B (CC-B)
Netload class	III (Netload Class III)
Protocol	DCP, LLDP, VLAN Priority, PTCP
Application	Communication with PROFINET IO controller; Ethernet standard services are also supported
Max. cable length	100 m
USB host	
Number	1 (on front with cover)
Connector type	A (socket)
Standard	USB 2.0 (high speed)
Application	Exclusively for connecting a USB flash drive (FAT16/FAT32; see accessories)
Max. load current	100 mA
USB device	
Number	1 (on the back)
Connector type	Micro-B (socket)
Standard	USB 2.0 (high speed)
Application	To connect to a PC (setup program, PCC/PCA3000)
Max. cable length	5 m

JUMO GmbH & Co. KG
Delivery address: Mackenrodtstraße 14
36039 Fulda, Germany
Postal address: 36035 Fulda, Germany
Phone: +49 661 6003-0
Fax: +49 661 6003-607
Email: mail@jumo.net
Internet: www.jumo.net

JUMO Instrument Co. Ltd.
JUMO House
Temple Bank, Riverway
Harlow, Essex, CM20 2DY, UK
Phone: +44 1279 63 55 33
Fax: +44 1279 62 50 29
Email: sales@jumo.co.uk
Internet: www.jumo.co.uk

JUMO Process Control, Inc.
6733 Myers Road
East Syracuse, NY 13057, USA
Phone: +1 315 437 5866
Fax: +1 315 437 5860
Email: info.us@jumo.net
Internet: www.jumousa.com

Screen

Type	TFT color screen/TFT-touchscreen (resistive)[a]
Size	14.5 cm (5.7")
Resolution	640 × 480 pixels (VGA)
Number of colors	65536
Frame rate	60 Hz (type)
Brightness setting	Adjustable on the device
Screensaver (switch-off)	After waiting period or due to control signal

[a] TFT color screens may have pixel errors due to technological and/or production-related reasons. Up to four pixel errors are deemed admissible for this paperless recorder; they do not provide the ground for warranty claims.

Electrical data

Voltage supply	AC 110 to 240 V +10/-15 %, 48 to 63 Hz or AC/DC 20 to 30 V, 48 to 63 Hz (not in conjunction with extra code 970)
Electrical safety	According to DIN EN 61010-1 Overvoltage category II to 300 V mains voltage, pollution degree 2
Protection rating	I with internal isolation from SELV
Power consumption	
AC 110 to 240 V	< 45 VA
AC/DC 20 to 30 V	< 30 VA
Data backup	Internal flash memory
Data buffering	Battery (operating life > 7 years); additionally, storage capacitor for buffering during battery change (buffer time approx. 2 minutes)
Time	Battery-buffered real-time clock
Electrical connection	On the back via push-in spring-cage terminals
Conductor cross section on terminal 5	
Wire or stranded wire without ferrule	Min. 0.2 mm^2, max. 2.5 mm^2
Stranded wire with ferrule	Min. 0.2 mm^2, max. 2.5 mm^2
2 × stranded wire with twin ferrule with plastic collar	Min. 0.5 mm^2, max. 1.5 mm^2 (both stranded wires with identical cross section)
Stripping length	10 mm
Conductor cross section on terminals 4, 14, and 15	
Wire or stranded wire without ferrule	Min. 0.2 mm^2, max. 2.5 mm^2 (with terminal cover: max. 1.5 mm^2)
Stranded wire with ferrule	Min. 0.25 mm^2, max. 2.5 mm^2 (with terminal cover: max. 1.5 mm^2)
Stripping length	10 mm
Conductor cross section on terminals 6 to 13	
Wire or stranded wire without ferrule	Min. 0.14 mm^2, max. 1.5 mm^2 (with terminal cover: max. 0.5 mm^2)
Stranded wire with ferrule	Without plastic collar: min. 0.25 mm^2, max. 1.5 mm^2 (with terminal cover: max. 0.5 mm^2) With plastic collar: min. 0.25 mm^2, max. 0.5 mm^2
Stripping length	9 mm

JUMO GmbH & Co. KG
Delivery address: Mackenrodtstraße 14
36039 Fulda, Germany
Postal address: 36035 Fulda, Germany
Phone: +49 661 6003-0
Fax: +49 661 6003-607
Email: mail@jumo.net
Internet: www.jumo.net

JUMO Instrument Co. Ltd.
JUMO House
Temple Bank, Riverway
Harlow, Essex, CM20 2DY, UK
Phone: +44 1279 63 55 33
Fax: +44 1279 62 50 29
Email: sales@jumo.co.uk
Internet: www.jumo.co.uk

JUMO Process Control, Inc.
6733 Myers Road
East Syracuse, NY 13057, USA
Phone: +1 315 437 5866
Fax: +1 315 437 5860
Email: info.us@jumo.net
Internet: www.jumousa.com

Environmental influences

Ambient temperature range	
Storage	-20 to +60 °C
Operation	-20 to +50 °C[a]; in conjunction with extra code 970: 0 to 40 °C
Site altitude	Max. 2000 m above sea level
Climatic environmental influences	According to DIN EN 60721-3 with extended temperature range
Resistance to climatic conditions	≤ 85 % rel. humidity without condensation
Storage	According to class 1K2
Operation	According to class 3K3
Mechanical environmental influences	According to DIN EN 60721-3
Storage	According to class 1M2
Transport	According to class 2M2
Operation	According to class 3M3
Electromagnetic compatibility (EMC)	According to DIN EN 61326-1
Interference emission	Class A – only for industrial use –
Interference immunity	Industrial requirements

[a] At temperatures below 0 °C, the build-up of screen contents slows down.

Case

Case type	Flush-mounted housing according to DIN IEC 61554 made of zinc-plated steel sheet (indoor use)
Case front	Made of die-cast zinc with decor foil
Front frame dimensions	144 mm x 144 mm (front frame depth approx. 8 mm including seal)
Mounting depth	120.9 mm (incl. spring-cage terminals)
Panel cut-out	$138^{+1.0}$ mm × $138^{+1.0}$ mm
Panel thickness	2 to 8 mm
Case fastening	In panel using the four supplied mounting elements
Operating position	Any, with due consideration for the viewing angle of the screen, horizontal ±50°, vertical ±30°
Protection type	According to DIN EN 60529, front IP66, back IP20; in conjunction with extra code 970: IP20 with open carrying case, IP20D with closed carrying case
Weight	Max. 1.65 kg (without terminal cover)

Approvals and approval marks

Approval mark	Testing facility	Certificate/certification number	Inspection basis	Valid for
c UL us	Underwriters Laboratories	E201387	UL 61010-1 (3. Ed.), CAN/CSA-22.2 No. 61010-1 (3rd Ed.)	All versions of the built-in device; not in conjunction with extra code 970

The device is approved if the approval mark is shown on the device.

JUMO GmbH & Co. KG
Delivery address: Mackenrodtstraße 14
36039 Fulda, Germany
Postal address: 36035 Fulda, Germany
Phone: +49 661 6003-0
Fax: +49 661 6003-607
Email: mail@jumo.net
Internet: www.jumo.net

JUMO Instrument Co. Ltd.
JUMO House
Temple Bank, Riverway
Harlow, Essex, CM20 2DY, UK
Phone: +44 1279 63 55 33
Fax: +44 1279 62 50 29
Email: sales@jumo.co.uk
Internet: www.jumo.co.uk

JUMO Process Control, Inc.
6733 Myers Road
East Syracuse, NY 13057, USA
Phone: +1 315 437 5866
Fax: +1 315 437 5860
Email: info.us@jumo.net
Internet: www.jumousa.com

Dimensions

Device

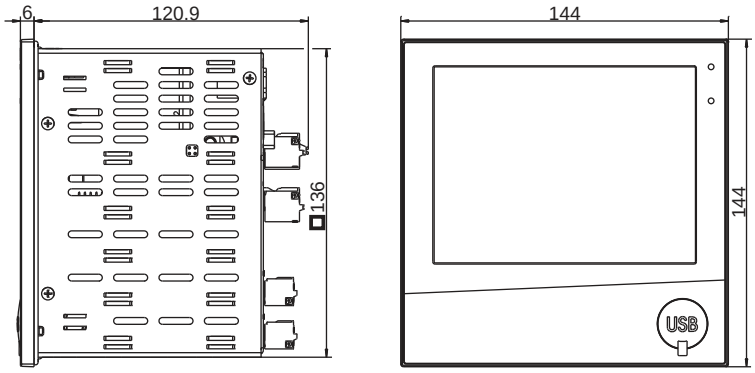

Panel cut-out

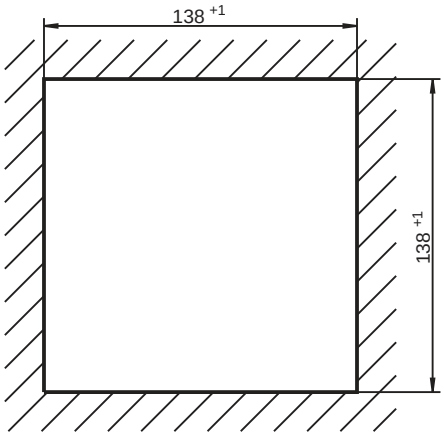

Close mounting

Distance between panel cut-outs	Horizontal	Vertical
Minimum clearance	20 mm	20 mm
Recommended distance (easier mounting of mounting elements)	50 mm	50 mm

Device with terminal cover (accessories)

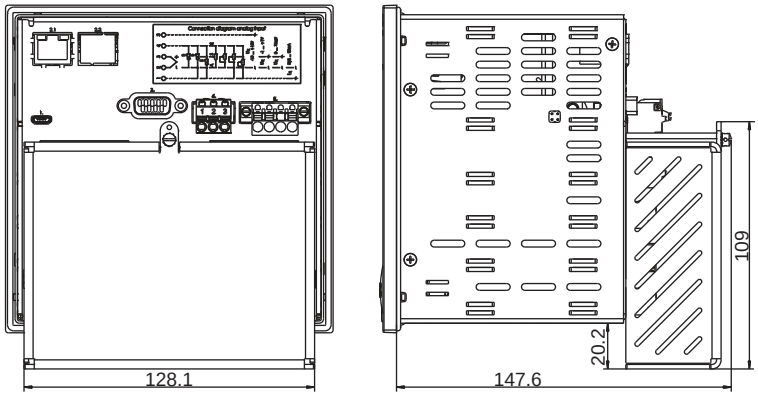

JUMO GmbH & Co. KG
Delivery address: Mackenrodtstraße 14
36039 Fulda, Germany
Postal address: 36035 Fulda, Germany
Phone: +49 661 6003-0
Fax: +49 661 6003-607
Email: mail@jumo.net
Internet: www.jumo.net

JUMO Instrument Co. Ltd.
JUMO House
Temple Bank, Riverway
Harlow, Essex, CM20 2DY, UK
Phone: +44 1279 63 55 33
Fax: +44 1279 62 50 29
Email: sales@jumo.co.uk
Internet: www.jumo.co.uk

JUMO Process Control, Inc.
6733 Myers Road
East Syracuse, NY 13057, USA
Phone: +1 315 437 5866
Fax: +1 315 437 5860
Email: info.us@jumo.net
Internet: www.jumousa.com

Universal carrying case, compact (extra code 970)

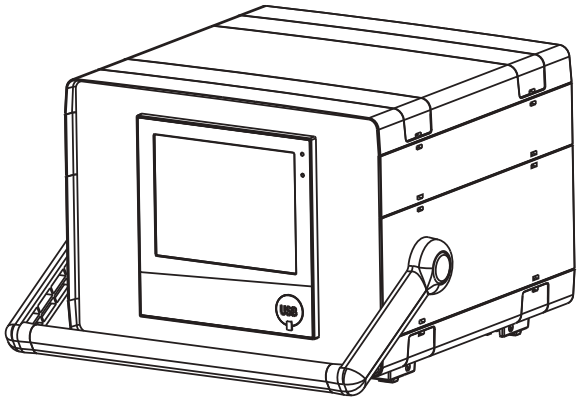

Dimensions

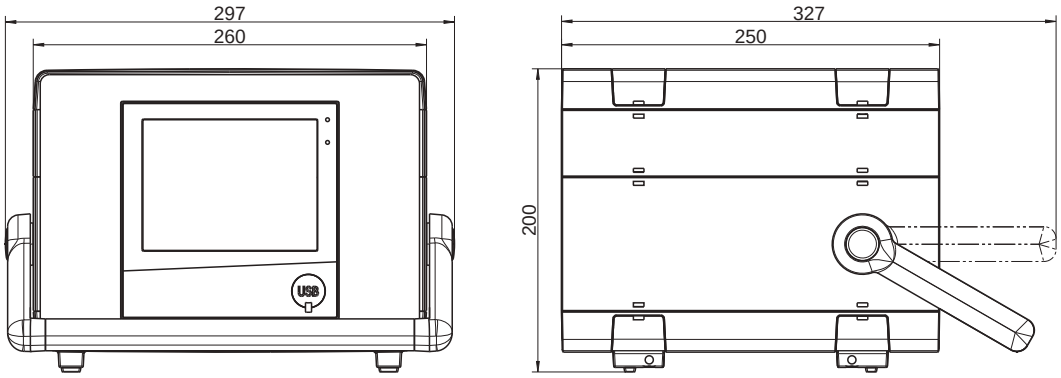

JUMO GmbH & Co. KG
Delivery address: Mackenrodtstraße 14
36039 Fulda, Germany
Postal address: 36035 Fulda, Germany
Phone: +49 661 6003-0
Fax: +49 661 6003-607
Email: mail@jumo.net
Internet: www.jumo.net

JUMO Instrument Co. Ltd.
JUMO House
Temple Bank, Riverway
Harlow, Essex, CM20 2DY, UK
Phone: +44 1279 63 55 33
Fax: +44 1279 62 50 29
Email: sales@jumo.co.uk
Internet: www.jumo.co.uk

JUMO Process Control, Inc.
6733 Myers Road
East Syracuse, NY 13057, USA
Phone: +1 315 437 5866
Fax: +1 315 437 5860
Email: info.us@jumo.net
Internet: www.jumousa.com

Galvanic isolation

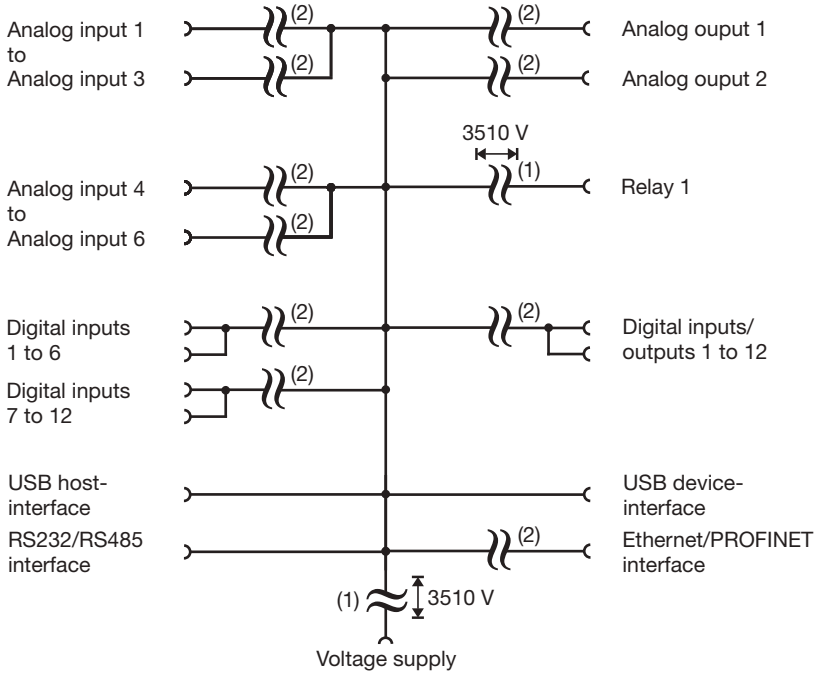

(1) The voltage specifications correspond to the test voltages (alternating voltage, rms values) according to EN 61010-1:2011-07 for the type test.

(2) Functional galvanic isolation for connection of SELV or PELV electrical circuits.

JUMO GmbH & Co. KG
Delivery address: Mackenrodtstraße 14
36039 Fulda, Germany
Postal address: 36035 Fulda, Germany
Phone: +49 661 6003-0
Fax: +49 661 6003-607
Email: mail@jumo.net
Internet: www.jumo.net

JUMO Instrument Co. Ltd.
JUMO House
Temple Bank, Riverway
Harlow, Essex, CM20 2DY, UK
Phone: +44 1279 63 55 33
Fax: +44 1279 62 50 29
Email: sales@jumo.co.uk
Internet: www.jumo.co.uk

JUMO Process Control, Inc.
6733 Myers Road
East Syracuse, NY 13057, USA
Phone: +1 315 437 5866
Fax: +1 315 437 5860
Email: info.us@jumo.net
Internet: www.jumousa.com

Connection elements

Front USB host interface (without cover)

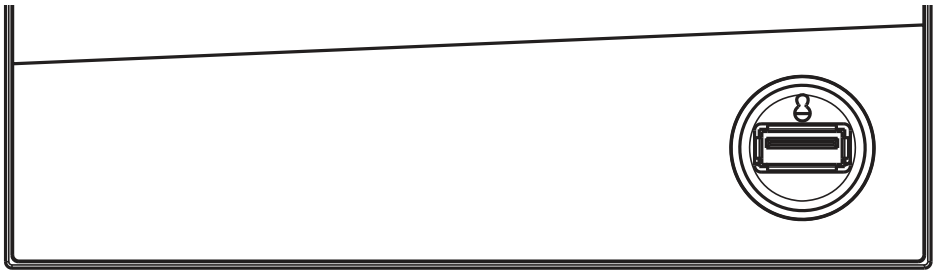

Back connection elements

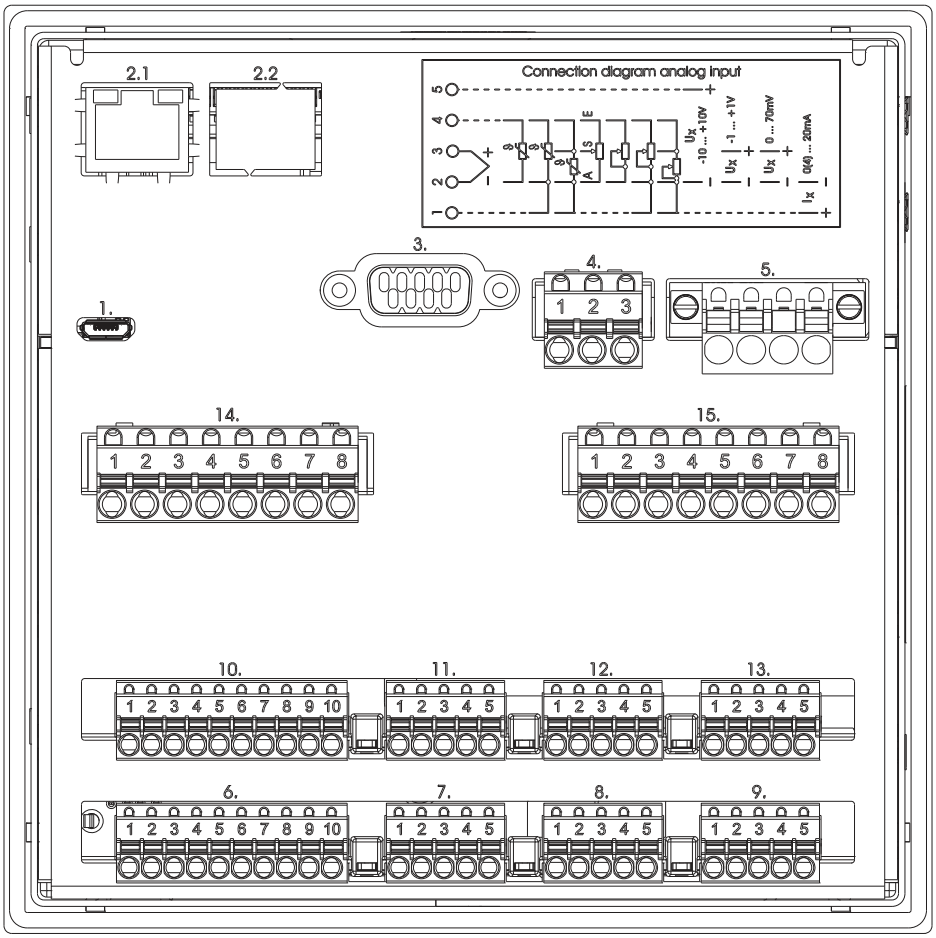

Connection element and assignment	
1.	USB device interface
2.1	Ethernet interface (as a standard feature) or
2.1, 2.2	PROFINET interface (including Ethernet; extra code): 2.1 = port 2, 2.2 = port 1
3.	RS232/RS485 interface

Connection element and assignment	
4.	Relay 1 (changeover contact)
5.	Voltage supply
6. - 15.	Option inputs and outputs (Slot 1 to Slot 3)

JUMO GmbH & Co. KG
Delivery address: Mackenrodtstraße 14
36039 Fulda, Germany
Postal address: 36035 Fulda, Germany
Phone: +49 661 6003-0
Fax: +49 661 6003-607
Email: mail@jumo.net
Internet: www.jumo.net

JUMO Instrument Co. Ltd.
JUMO House
Temple Bank, Riverway
Harlow, Essex, CM20 2DY, UK
Phone: +44 1279 63 55 33
Fax: +44 1279 62 50 29
Email: sales@jumo.co.uk
Internet: www.jumo.co.uk

JUMO Process Control, Inc.
6733 Myers Road
East Syracuse, NY 13057, USA
Phone: +1 315 437 5866
Fax: +1 315 437 5860
Email: info.us@jumo.net
Internet: www.jumousa.com

Connection diagram

The connection diagram in the data sheet provides preliminary information about the connection options. For the electrical connection, only use the quick start guide or the operating manual. The knowledge and the correct technical execution with the safety information and warnings contained in these documents are mandatory for mounting, electrical connection, and startup as well as for safety during operation.

Analog inputs

Measuring probe	**Terminals and connection symbol**	**Connection element.terminal / assignment**
Thermocouple	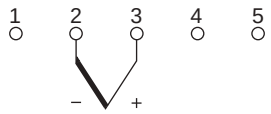	**Analog/digital option (order code 1):** 7.1-5 / Analog input 1 8.1-5 / Analog input 2 9.1-5 / Analog input 3 11.1-5 / Analog input 4 12.1-5 / Analog input 5 13.1-5 / Analog input 6 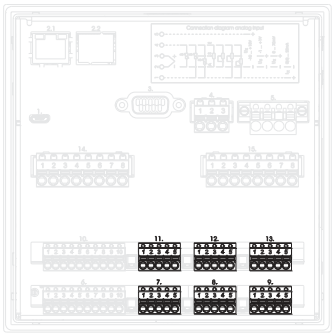
RTD temperature probe Two-wire circuit	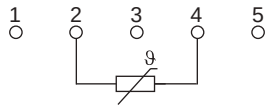	
RTD temperature probe Three-wire circuit	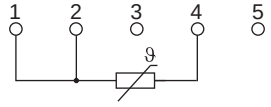	
RTD temperature probe Four-wire circuit	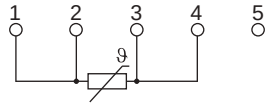	
Resistance transmitter	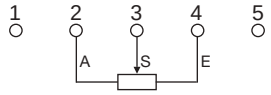	
Resistance/potentiometer Two-wire circuit	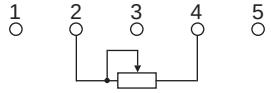	

JUMO GmbH & Co. KG
Delivery address: Mackenrodtstraße 14
36039 Fulda, Germany
Postal address: 36035 Fulda, Germany
Phone: +49 661 6003-0
Fax: +49 661 6003-607
Email: mail@jumo.net
Internet: www.jumo.net

JUMO Instrument Co. Ltd.
JUMO House
Temple Bank, Riverway
Harlow, Essex, CM20 2DY, UK
Phone: +44 1279 63 55 33
Fax: +44 1279 62 50 29
Email: sales@jumo.co.uk
Internet: www.jumo.co.uk

JUMO Process Control, Inc.
6733 Myers Road
East Syracuse, NY 13057, USA
Phone: +1 315 437 5866
Fax: +1 315 437 5860
Email: info.us@jumo.net
Internet: www.jumousa.com

Measuring probe	**Terminals and connection symbol**	**Connection element.terminal / assignment**
Resistance/potentiometer Three-wire circuit	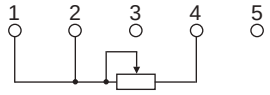	
Resistance/potentiometer Four-wire circuit	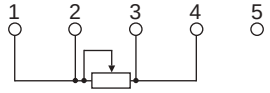	
Voltage DC -10(0) to +10 V	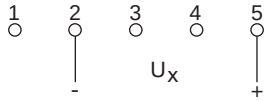	
Voltage DC -1(0) to +1 V	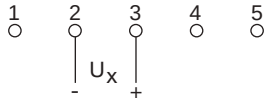	
Voltage DC 0 to 70 mV		
Current DC 0(4) to 20 mA		

JUMO GmbH & Co. KG
Delivery address: Mackenrodtstraße 14
36039 Fulda, Germany
Postal address: 36035 Fulda, Germany
Phone: +49 661 6003-0
Fax: +49 661 6003-607
Email: mail@jumo.net
Internet: www.jumo.net

JUMO Instrument Co. Ltd.
JUMO House
Temple Bank, Riverway
Harlow, Essex, CM20 2DY, UK
Phone: +44 1279 63 55 33
Fax: +44 1279 62 50 29
Email: sales@jumo.co.uk
Internet: www.jumo.co.uk

JUMO Process Control, Inc.
6733 Myers Road
East Syracuse, NY 13057, USA
Phone: +1 315 437 5866
Fax: +1 315 437 5860
Email: info.us@jumo.net
Internet: www.jumousa.com

Analog outputs

Version	Terminals and connection symbol	Connection element.terminal / assignment
Analog output DC 0 to 10 V or DC 0(4) to 20 mA (configurable)	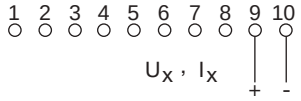	**Analog/digital option (order code 1):** 6.9 / Analog output 1 + 6.10 / Analog output 1 - 10.9 / Analog output 2 + 10.10 / Analog output 2 - 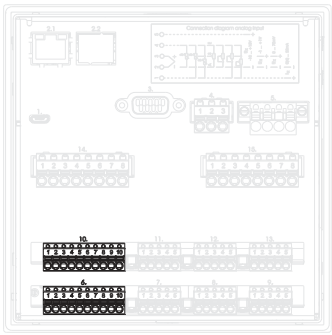

Digital inputs

Version	Terminals and connection symbol	Connection element.terminal / assignment
Digital input DC 0/24 V, auxiliary voltage supply DC 24 V	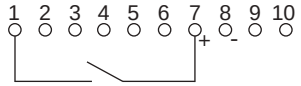 Example: potential-free contact on digital input 1 and +24 V (auxiliary voltage) 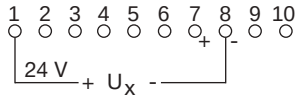 Example: external voltage on digital input 1 and GND	**Analog/digital option (order code 1):**: 6.1 / Digital input 1 6.2 / Digital input 2 6.3 / Digital input 3 6.4 / Digital input 4 6.5 / Digital input 5 6.6 / Digital input 6 6.7 / +24 V 6.8 / GND 10.1 / Digital input 7 10.2 / Digital input 8 10.3 / Digital input 9 10.4 / Digital input 10 10.5 / Digital input 11 10.6 / Digital input 12 10.7 / +24 V 10.8 / GND 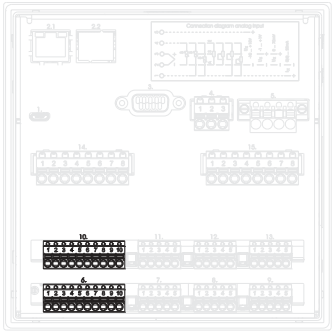

JUMO GmbH & Co. KG
Delivery address: Mackenrodtstraße 14
36039 Fulda, Germany
Postal address: 36035 Fulda, Germany
Phone: +49 661 6003-0
Fax: +49 661 6003-607
Email: mail@jumo.net
Internet: www.jumo.net

JUMO Instrument Co. Ltd.
JUMO House
Temple Bank, Riverway
Harlow, Essex, CM20 2DY, UK
Phone: +44 1279 63 55 33
Fax: +44 1279 62 50 29
Email: sales@jumo.co.uk
Internet: www.jumo.co.uk

JUMO Process Control, Inc.
6733 Myers Road
East Syracuse, NY 13057, USA
Phone: +1 315 437 5866
Fax: +1 315 437 5860
Email: info.us@jumo.net
Internet: www.jumousa.com

Digital inputs/outputs

Version	Terminals and connection symbol	Connection element.terminal / assignment
Digital input DC 0/24 V or digital output DC 0/24 V (individually switchable), auxiliary voltage supply DC 24 V Note regarding the digital option: Auxiliary voltage supply and digital outputs together deliver max. 100 mA (at 24 V).	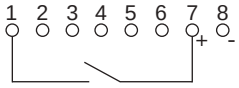 Example: potential-free contact on digital input/output 1 (as input) and +24 V (auxiliary voltage) 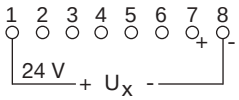 Example: external voltage on digital input/output 1 (as input) and GND 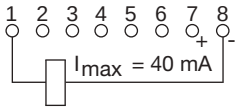 Example: external relay on digital input/output 1 (as output) and GND (max. 40 mA per output, max. 100 mA in total, see note in the "Version" column)	**Digital option (order code 4):** 14.1 / Digital input/output 1 14.2 / Digital input/output 2 14.3 / Digital input/output 3 14.4 / Digital input/output 4 14.5 / Digital input/output 5 14.6 / Digital input/output 6 14.7 / +24 V 14.8 / GND 15.1 / Digital input/output 7 15.2 / Digital input/output 8 15.3 / Digital input/output 9 15.4 / Digital input/output 10 15.5 / Digital input/output 11 15.6 / Digital input/output 12 15.7 / +24 V 15.8 / GND 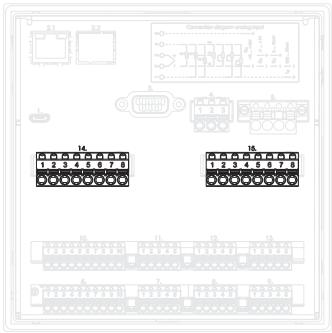

Relays

Version	Terminals and connection symbol	Connection element.terminal / assignment
Relay (changeover contact) (max. 3 A at AC 230 V, resistive load)	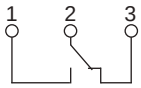 	Relay 1: 4.1 / Normally open contact (NO) 4.2 / Common contact (C) 4.3 / Normally closed contact (NC)

RS232/RS485 interface

Version	Connection element.pin / assignment	Connection element
RS232 9-pin SUB-D socket (switchable to RS485)	3.2 / RxD (received data) 3.3 / TxD (transmission data) 3.5 / GND (ground)	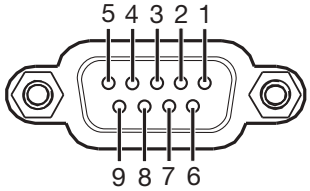
RS485 9-pin SUB-D socket (switchable to RS232)	3.3 / TxD+/RxD+ (transmission/received data +) 3.5 / GND (ground) 3.8 / TxD-/RxD- (transmission/received data -)	

JUMO GmbH & Co. KG
Delivery address: Mackenrodtstraße 14
36039 Fulda, Germany
Postal address: 36035 Fulda, Germany
Phone: +49 661 6003-0
Fax: +49 661 6003-607
Email: mail@jumo.net
Internet: www.jumo.net

JUMO Instrument Co. Ltd.
JUMO House
Temple Bank, Riverway
Harlow, Essex, CM20 2DY, UK
Phone: +44 1279 63 55 33
Fax: +44 1279 62 50 29
Email: sales@jumo.co.uk
Internet: www.jumo.co.uk

JUMO Process Control, Inc.
6733 Myers Road
East Syracuse, NY 13057, USA
Phone: +1 315 437 5866
Fax: +1 315 437 5860
Email: info.us@jumo.net
Internet: www.jumousa.com

Ethernet/PROFINET

Version	Connection element.pin / assignment	Connection element
Ethernet 1 x RJ45 (as a standard feature)	2.1.1 / TX+ (transmission data +) 2.1.2 / TX- (transmission data -) 2.1.3 / RX+ (received data +) 2.1.6 / RX- (received data -)	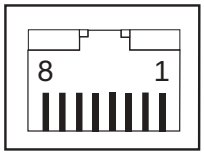
PROFINET IO device (incl. Ethernet) 2 x RJ45, integrated switch (as extra code)	Port 2: 2.1.1 / TX+ (transmission data +) 2.1.2 / TX- (transmission data -) 2.1.3 / RX+ (received data +) 2.1.6 / RX- (received data -) Port 1: 2.2.1 / TX+ (transmission data +) 2.2.2 / TX- (transmission data -) 2.2.3 / RX+ (received data +) 2.2.6 / RX- (received data -)	

Voltage supply

Version	Connection element.terminal / assignment	Terminals and connection symbol
AC 110 to 240 V +10/-15 %, 48 to 63 Hz **or** AC/DC 20 to 30 V, 48 to 63 Hz **Observe order details!**	5.L1 / Line conductor (for DC: positive terminal L+) 5.N / Neutral conductor (for DC: negative terminal L-) 5.PE / Protection conductor	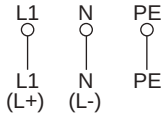

JUMO GmbH & Co. KG
Delivery address: Mackenrodtstraße 14
36039 Fulda, Germany
Postal address: 36035 Fulda, Germany
Phone: +49 661 6003-0
Fax: +49 661 6003-607
Email: mail@jumo.net
Internet: www.jumo.net

JUMO Instrument Co. Ltd.
JUMO House
Temple Bank, Riverway
Harlow, Essex, CM20 2DY, UK
Phone: +44 1279 63 55 33
Fax: +44 1279 62 50 29
Email: sales@jumo.co.uk
Internet: www.jumo.co.uk

JUMO Process Control, Inc.
6733 Myers Road
East Syracuse, NY 13057, USA
Phone: +1 315 437 5866
Fax: +1 315 437 5860
Email: info.us@jumo.net
Internet: www.jumousa.com

Order details

	(1)	**Basic type**
706521		Paperless recorder with the following interfaces: 1x Ethernet, 2x USB (1x host, 1x device), 1x RS232/485 interface, as well as a relay (changeover contact)
	(2)	**Basic type extension**
0		Without software package
1		With software package (setup program incl. USB cable, PC Evaluation Software PCA3000, PCA Communication Software PCC; in conjunction with extra code "888" as well with PC Security Manager PCS and PC Audit Trail Manager PCAT software)
	(3)	**Language**
8		Default setting (German/English)
9		Set according to customer specifications
	(4)	**Option 1 (slot 1)**[a]
0		Not used
1		Analog/digital: 3 analog and 6 digital inputs, 1 analog output
	(5)	**Option 2 (slot 2)**[a]
0		Not used
1		Analog/digital: 3 analog and 6 digital inputs, 1 analog output
	(6)	**Option 3 (slot 3)**[a]
0		Not used
4		Digital: 12 digital inputs/outputs (individually switchable)
	(7)	**Voltage supply**
23		AC 110 to 240 V +10/-15 %, 48 to 63 Hz
25		AC/DC 20 to 30 V, 48 to 63 Hz
	(8)	**Extra code 1**
.		Not used
260		Math and logic module (6 channels each)
221		Structured text (ST code)
	(9)	**Extra code 2**
.		Not used
887		Manipulation detection with digital certificate
888		FDA 21 CFR Part 11 with digital certificate
	(10)	**Extra code 3**
.		Not used
163		PROFINET IO device interface (incl. Ethernet)
879		AMS2750/CQI-9[b]
	(11)	**Extra code, housing**
.		Not used
970		Universal carrying case, compact[c]

[a] Subsequent expansion is only possible in JUMO Central Services.

[b] For the calibration certificate it is necessary to state the channels along with the thermocouple type and the desired measuring points. The device is to be used as a permanently installed field device. Use as a mobile field test device for SAT and TUS testing is not permitted.

[c] The extra code is only available in conjunction with voltage supply AC 110 to 240 V. The UL approval does not apply. Use only for personnel with technical qualifications who have been specially trained, and have the relevant knowledge in the field of automation technology! Specifications for ambient temperature and for protection type are to be observed (see technical data)!

	(1)		(2)	(3)		(4)	(5)	(6)		(7)		(8)[a]		(9)		(10)[a]		(11)
Order code		/			-				-		/		,		,		,	
Order example	706521	/	1	8	-	1	1	4	-	23	/	260	,	887	,	163	,	970

[a] Multiple selection at positions 8 and 10 is possible. Specify extra codes one after the other, and separate them with commas.

JUMO GmbH & Co. KG
Delivery address: Mackenrodtstraße 14
36039 Fulda, Germany
Postal address: 36035 Fulda, Germany
Phone: +49 661 6003-0
Fax: +49 661 6003-607
Email: mail@jumo.net
Internet: www.jumo.net

JUMO Instrument Co. Ltd.
JUMO House
Temple Bank, Riverway
Harlow, Essex, CM20 2DY, UK
Phone: +44 1279 63 55 33
Fax: +44 1279 62 50 29
Email: sales@jumo.co.uk
Internet: www.jumo.co.uk

JUMO Process Control, Inc.
6733 Myers Road
East Syracuse, NY 13057, USA
Phone: +1 315 437 5866
Fax: +1 315 437 5860
Email: info.us@jumo.net
Internet: www.jumousa.com

Stock versions

Order code	Part no.
706521/08-000-23/000	00727734
706521/08-100-23/000	00727735
706521/18-100-23/000	00727736
706521/08-110-23/000	00727737
706521/18-110-23/000	00727738

Scope of delivery

1 paperless recorder in the ordered version
1 quick start guide (brief instructions)
4 mounting elements

Accessories

Description	Part no.
Setup program	00645110
USB cable, A connector to Micro-B connector, length 3 m	00616250
PC Evaluation Software PCA3000	00431882
PCA communication software PCC	00431879
PC software package consisting of: setup program, PC Evaluation Software PCA3000, PCA Communication Software PCC, PC Security Manager PCS, PC Audit Trail Manager PCAT. Please specify all version numbers when placing follow-up orders.	00666817
USB flash drive, 2 GB[a]	00505592
Activation for math and logic module (setup program required)	00716354
Activation for structured text (ST code; setup program required)	00716357
Activation, automatic printout (PCA3000)	00505548
TP-Link TL-WR710N (Wi-Fi router)	00658592
Sealable terminal cover	00712239
Relay (N/O contact) AC 230 V / 3 A for DIN rail	00515872

[a] The indicated USB flash drive has been tested and is designed for industrial applications. Other brands with larger storage capacity can also be used, but no liability is assumed for this.

JUMO GmbH & Co. KG
Delivery address: Mackenrodtstraße 14
36039 Fulda, Germany
Postal address: 36035 Fulda, Germany
Phone: +49 661 6003-0
Fax: +49 661 6003-607
Email: mail@jumo.net
Internet: www.jumo.net

JUMO Instrument Co. Ltd.
JUMO House
Temple Bank, Riverway
Harlow, Essex, CM20 2DY, UK
Phone: +44 1279 63 55 33
Fax: +44 1279 62 50 29
Email: sales@jumo.co.uk
Internet: www.jumo.co.uk

JUMO Process Control, Inc.
6733 Myers Road
East Syracuse, NY 13057, USA
Phone: +1 315 437 5866
Fax: +1 315 437 5860
Email: info.us@jumo.net
Internet: www.jumousa.com

JUMO LOGOSCREEN 700

Highly-scalable paperless recorder

Brief description

The JUMO LOGOSCREEN 700 paperless recorder is characterized by an intuitive, icon-based operation and visualization concept that makes it easy to operate.

Multiple versions of the JUMO LOGOSCREEN 700 are available for process data recording. The high level of scalability allows for flexible adaptation to various customer requirements: from the device version without measurement input (120 process values via interface) through to different device versions with up to 18 measurement inputs (universal analog inputs), 3 analog outputs, 18 digital inputs, 24 individually switchable digital inputs/outputs, and 7 relay outputs. The version with FDA-compliant data recording fulfills all requirements according to 21 CFR Part 11.

In order to display the recorded data, the JUMO LOGOSCREEN 700 features various visualizations. In addition, the user can use the setup program to create up to 10 separate process screens – with up to 100 objects per process screen – according to his individual requirements. For batch-based processes, there are up to 5 special batch recordings available, which enable the storage of additional, batch-related information. The extra code, "structured text" allows for the creation of individual measurement and recording applications.

Type 706530/...

Block diagram

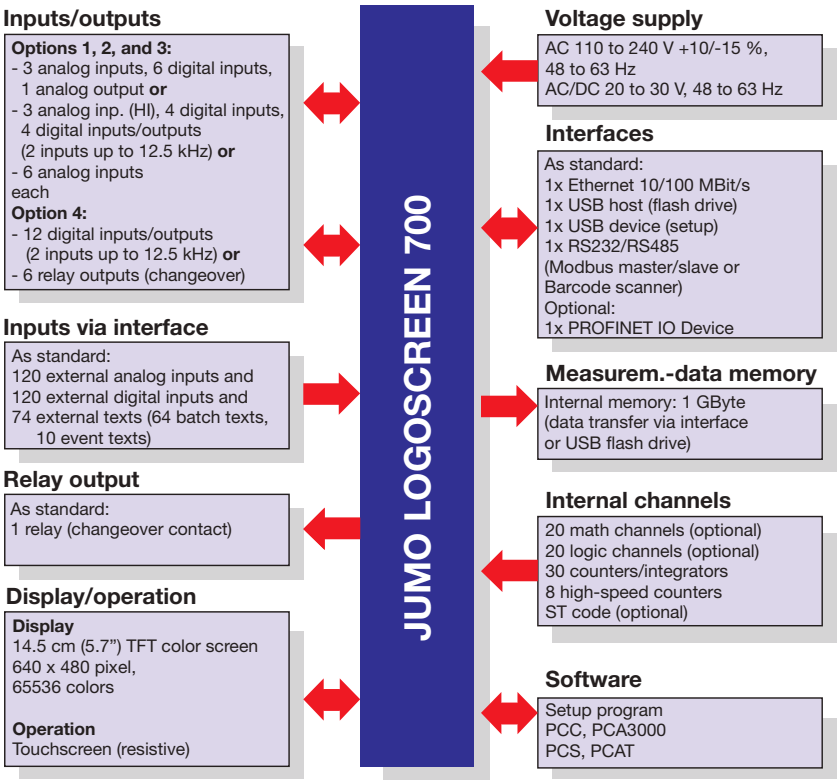

Special features

- Intuitive touch operation
- Up to 3 analog outputs
- Up to 10 customer-specific process screens
- PROFINET IO device interface (extra code)
- Integrated web server for online visualization as on device
- Recording of up to 5 batch reports
- Up to 500 individual texts
- Limit value monitoring function (120 channels)
- Flow measurement (up to 8 channels)
- Up to 8 counter inputs (max. 12.5 kHz)
- User-specific application using structured text (ST code; extra code)
- Automatic data readout via PCA Communication Software PCC
- Data recording compliant with FDA 21 CFR Part 11 (extra code)
- Manipulation detection with digital certificate (extra code)
- PC programs for data evaluation and access control
- AMS2750/CQI-9 (extra code)
- Wide operating temperature range

Approvals and approval marks (see "Technical data")

JUMO GmbH & Co. KG
Delivery address: Mackenrodtstraße 14
36039 Fulda, Germany
Postal address: 36035 Fulda, Germany
Phone: +49 661 6003-0
Fax: +49 661 6003-607
Email: mail@jumo.net
Internet: www.jumo.net

JUMO Instrument Co. Ltd.
JUMO House
Temple Bank, Riverway
Harlow, Essex, CM20 2DY, UK
Phone: +44 1279 63 55 33
Fax: +44 1279 62 50 29
Email: sales@jumo.co.uk
Internet: www.jumo.co.uk

JUMO Process Control, Inc.
6733 Myers Road
East Syracuse, NY 13057, USA
Phone: +1 315 437 5866
Fax: +1 315 437 5860
Email: info.us@jumo.net
Internet: www.jumousa.com

Description

Configuration and operation

On the device

The JUMO operation and visualization concept, allows the user to operate the paperless recorder almost intuitively. All operations are performed with an icon-based menu system on the resistive touchscreen.

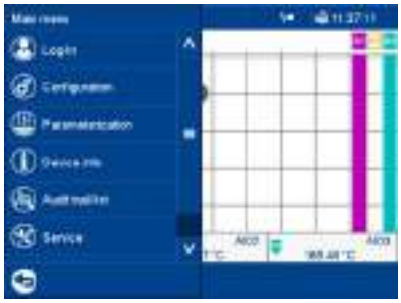

The integrated user management protects the paperless recorder against unauthorized access. The standard version supports up to five users with varying access rights. The extra code 888 (FDA 21 CFR Part 11) allows for up to 50 users to be managed.

With the setup program

The paperless recorder can also be configured using the setup program; it should be noted that some functions are only available in the setup program, such as:

- Editing the operating language
- Assigning user rights
- Creating process screens
- Creating texts (e.g. for batch reports and process screens)

The setup program is installed on a PC with a Windows[1] operating system (7/8/10 – 32 or 64 bit) and communicates with the paperless recorder via USB or Ethernet interface. It is also possible to transfer configuration files to the paperless recorder using a USB flash drive.

[1] Windows is a registered trademark of the Microsoft Corporation.

The user can save the configuration data as a file, which can also be printed out for documentation purposes.

Operating language

Multiple operating languages can be selected on the device. These can be edited and switched using the setup program. The languages German, English, French, Spanish, Czech, Chinese, Russian, and Italian are currently available. Users can also create their own language versions (Unicode compatible).

Process screen editor

The user can use the setup program to create 10 individual process screens which he can subsequently transfer to the paperless recorder and use to display process data and input text and process values there. Each process screen can consist of up to 100 objects (images, analog channels, digital channels, text, etc.).

Interfaces

USB

The paperless recorder is equipped with two USB interfaces as a standard feature. A USB flash drive can be connected to the host interface located on the front. The device interface on the back (Micro-B type) can be used to connect the device to a PC (setup program or PCC/PCA3000).

The USB host interface has a cover so that the front of the device complies with protection type IP66.

Ethernet

The paperless recorder is equipped with an Ethernet interface as a standard feature, which supports the following functions:

- Communication with a PC (setup program, web server, data archiving with PCC/PCA3000)
- Email dispatch via SMTP server
- Time synchronization via SNTP server
- Communication with a Modbus master/slave

The IP address is either configured as a fixed address or received automatically from a DHCP server; DNS is supported.

RS232/RS485

This interface available as a standard feature can be configured as RS232 and RS485. It is used for communicating with a Modbus master or a Modbus slave. It can also be used to connect to a barcode scanner.

PROFINET IO device

The paperless recorder can also be equipped with a PROFINET interface and integrated into a PROFINET network as an IO device as an optional extra. The interface also supports simultaneous use of Ethernet standard services; thus Ethernet interfaces as a standard feature are omitted.

A GSD file (GSDML) is available for the programming system of the IO controller, which describes the features of the paperless recorder.

External inputs via interface

The paperless recorder can access 120 external analog inputs and 120 external digital inputs via the interfaces (Ethernet, RS232/RS485). In addition, 64 texts for batch reports and 10 event texts with a text length of up to 160 characters can be transferred. In doing so the Modbus-TCP/Modbus-RTU (master/slave respectively) reports are used.

These external inputs are also available via the optional PROFINET interface.

Inputs and outputs

The different device versions of the paperless recorder are available with analog and digital inputs and outputs (options).

The analog inputs (max. 18) are universal measurement inputs for RTD temperature probes, thermocouples, resistance transmitters, resistance/potentiometers, and standard signals (current, voltage).

The analog outputs (max. 3) can each be used as voltage output (0 to 10 V) or current output (0/4 to 20 mA).

The digital inputs (max. 18) and the individually switchable digital inputs/outputs (max. 24) are operated with a voltage of DC 0/24 V.

All device versions feature a relay output (changeover contact). There is also the option of 6 additional relay outputs (changeover contacts) available.

JUMO GmbH & Co. KG
Delivery address: Mackenrodtstraße 14
36039 Fulda, Germany
Postal address: 36035 Fulda, Germany
Phone: +49 661 6003-0
Fax: +49 661 6003-607
Email: mail@jumo.net
Internet: www.jumo.net

JUMO Instrument Co. Ltd.
JUMO House
Temple Bank, Riverway
Harlow, Essex, CM20 2DY, UK
Phone: +44 1279 63 55 33
Fax: +44 1279 62 50 29
Email: sales@jumo.co.uk
Internet: www.jumo.co.uk

JUMO Process Control, Inc.
6733 Myers Road
East Syracuse, NY 13057, USA
Phone: +1 315 437 5866
Fax: +1 315 437 5860
Email: info.us@jumo.net
Internet: www.jumousa.com

Customer-specific linearization

Sensor signals with special characteristic line characteristics can also be used through customer-specific linearization (e.g. PTC/NTC sensors under consideration of the resistance measuring range). Configuration is carried out in the setup program on the basis of a value table with up to 40 value pairs or through a formula (4th order polynomial).

Data recording

The measured values are recorded continuously with a sampling rate of 125 ms. Report creation and limit value monitoring are performed based on these measured values. The measured values are transferred to the working memory of the device depending on the programmable memory cycle and memory value (current value, average value, maximum value, minimum value, or minimum/maximum values). The paperless recorder stores the data according to group; one input can be assigned to multiple groups (max. 10). A total of 60 analog channels and 60 digital channels can be recorded; these can be assigned to groups individually (max. 6 analog channels and 6 digital channels per group). Up to four groups can be recorded at the same time with the fastest memory cycle of 125 ms.

Working memory (SRAM)

The data stored in the SRAM is copied to the internal memory in 20-kByte blocks at regular intervals.

Internal memory (flash)

Whenever a memory block in the working memory is full, it is copied to the internal memory. The internal memory has a maximum capacity of 1 GB. Each write operation is monitored to ensure that any data storage errors are detected immediately.

The device monitors the capacity of the internal memory and, if the remaining capacity falls below the configured minimum, a memory alarm signal is triggered. This can, for example, control the alarm relay.

The data is written to the memory as a ring buffer, which means that when the memory is full, the oldest data is automatically overwritten with new data.

To show the history in the paperless recorder, data from the internal memory can be displayed (history memory: 8 MByte).

Data transfer to PC

Data can be transferred from the paperless recorder to a PC via a USB flash drive or via one of the interfaces (USB device, Ethernet).

Data security

Data is stored in an encrypted format developed by JUMO. This ensures a high level of data security.

The following applies if the paperless recorder is disconnected from the voltage supply:

- Measurement data in the working memory and time are buffered by a lithium battery (operating life > 7 years).
- If the lithium battery is discharged, the measurement data in the working memory and the time are lost. For the purposes of a battery change, the data is buffered for approximately 2 minutes by a storage capacitor.
- Measurement and configuration data in the internal memory are not lost.

Extra code 887 gives the device reliable manipulation detection. A digital device certificate verifies that the recording data in the device has not been manipulated – which also applies to the transfer into the data archive.

Recording time

The maximum recording time depends on a number of factors, in particular on the set memory cycle. The values specified in the table (entries in the event list reduce the maximum recording time) apply when a group with 6 analog channels is activated in standard operation and storage of average values (not the minimum/maximum values).

Memory cycle	Max. recording time
125 ms	Approx. 42 days
1 s	Approx. 8 months
5 s	Approx. 41 months
10 s	Approx. 82 months
60 s	Approx. 493 months

Reports

For each channel in a group, reports can be maintained over specified time periods (maximum, minimum, and average values). Configuration takes place for each group.

Batch report

The paperless recorder allows batch reports to be created for up to 5 plants. The measurement data, the beginning, end, and duration of the batch can be displayed together with a batch counter and freely definable texts on the paperless recorder and in the PC Evaluation Software PCA3000. A barcode scanner can also be used to start and stop the batch and to load batch texts.

GPS data recording

GPS data (NMEA 0183 data records) can be received and recorded via the serial interface of the device. The data of the connected GPS receivers (e.g. positioning data) are cyclically entered into the event list (group-related) and can thus be evaluated in conjunction with further registration data.

Operating modes

The operating mode can be selected individually for each group. The memory cycle and memory value can be separately configured for each operating mode. Up to 4 groups can be recorded with one memory cycle of 125 ms.

The operating modes have different priorities:

Event operation

Event operation is activated/deactivated by a control signal (such as a digital input, group, or collective alarm). The device is in event operation for as long as the control signal is active. Event operation has the highest priority.

Time operation

Time operation is active on a daily basis within a programmable timeframe, providing event operation is not active.

Standard operation

If the device is **not** in event or time operation, standard operation is active.

Limit value monitoring

Up to 120 analog values can be monitored by the configurable limit value monitoring function. In the event of deviation above or below the limit value, an alarm signal is generated that can be used for individual purposes (such as switching the operating mode from standard to event operation).

The alarm delay can be used to hide short-term deviations above or below the limit value so that no alarm signal is issued. It is also possible to suppress the alarm signal by a digital signal.

Limit value and switching differential can also be changed as part of parameterization, provided the user has the rights to do this.

Counters/integrators

Thirty additional internal channels are available as counters, integrators, operating time counters, or to determine the total flow volume. Up to 8 high-speed counters can be implemented (up to 12.5 kHz) using specific optional extra digital inputs/outputs or digital

JUMO GmbH & Co. KG
Delivery address: Mackenrodtstraße 14
36039 Fulda, Germany
Postal address: 36035 Fulda, Germany
Phone: +49 661 6003-0
Fax: +49 661 6003-607
Email: mail@jumo.net
Internet: www.jumo.net

JUMO Instrument Co. Ltd.
JUMO House
Temple Bank, Riverway
Harlow, Essex, CM20 2DY, UK
Phone: +44 1279 63 55 33
Fax: +44 1279 62 50 29
Email: sales@jumo.co.uk
Internet: www.jumo.co.uk

JUMO Process Control, Inc.
6733 Myers Road
East Syracuse, NY 13057, USA
Phone: +1 315 437 5866
Fax: +1 315 437 5860
Email: info.us@jumo.net
Internet: www.jumousa.com

inputs. These optional extra inputs are also required for flow measurement, if the pulses of a flow transmitter are to be evaluated.

The counters are controlled via digital signals (counting pulses), whereas the integrators are controlled via analog signals (value integrated according to the selected time base). Operating time counters determine the timeframe during which a digital signal is active.

The value of the counter/integrator is displayed in a separate window of the paperless recorder in numerical format with a maximum of 9 digits (in the event that this is exceeded, the counter restarts with 0). Different recording periods can be set. A minimum and maximum alarm can be configured for each counter/integrator.

Up to 6 counters can be assigned to one group.

Math and logic module

The math and logic module (each with 20 channels) is available as extra code.

The math function can be used to link various analog and Boolean input variables using a formula which can be defined freely in accordance with mathematical rules (formula with a maximum of 160 ASCII characters). The output variables are real values. As an alternative to entering a formula, the following mathematical functions are already available: difference, ratio, humidity, and floating average.

The logic function allows various Boolean values to be linked using a logic formula (maximum of 600 ASCII characters). The output variables are Boolean values.

The math and logic module can only be configured via the setup program.

Structured text

The user has the option to create his/her own application using the "Structured text" option (extra code).

The application with the ST editor, which is part of the setup program, is created in the PLC programming language "Structured text". The finished application is transmitted to the device and continuously processed there. There are online-debugger functions available in the ST editor for testing and troubleshooting.

FDA-compliant data recording

Extra code 888 allows the paperless recorder to fully meet FDA requirements in accordance with 21 CFR Part 11. User management and startup require the PC software package (including PCS and PCAT).

The device supports up to 50 users with specific rights. The user has the option to provide a completed batch or the recording data of a certain time range with their electronic signature. A logged-in user can also provide their signature during logoff – it applies to the entire time period for which the user was logged in.

Visualization on the device

Various display types are available to visualize the measurement data on the paperless recorder. The visualization screen after power-on-reset can be selected in the configuration, as can the screen that appears when the home button is pressed.

The colors of the individual channels and the background color of the analog curves and the digital traces can be set.

Vertical diagram

- Analog curves and digital traces running from top to bottom
- Up to 6 analog and 6 digital channels in one group can be shown on one screen
- Group rotation (max. 10, of which 4 with maximum memory cycle)
- Digital traces can be hidden
- Channel information (short description of signal, analog value) can be hidden
- Auxiliary lines can be shown and hidden

Horizontal diagram

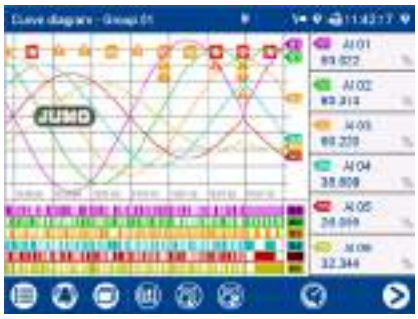

- Analog curves and digital traces running from right to left
- Digital traces and channel information can be hidden
- Auxiliary lines can be shown and hidden

Digital diagram

- Up to 6 digital channels in one group on one screen
- Vertical display (digital traces running from top to bottom)
- Horizontal display (digital traces running from right to left)

Bar graph display

- Up to 6 analog channels in one group as a bar graph on one screen
- Display of scaling and limit values
- Configurable bar color and background color
- Additional display of up to 6 digital channels in one group as a symbol B1 to B6

JUMO GmbH & Co. KG
Delivery address: Mackenrodtstraße 14
36039 Fulda, Germany
Postal address: 36035 Fulda, Germany
Phone: +49 661 6003-0
Fax: +49 661 6003-607
Email: mail@jumo.net
Internet: www.jumo.net

JUMO Instrument Co. Ltd.
JUMO House
Temple Bank, Riverway
Harlow, Essex, CM20 2DY, UK
Phone: +44 1279 63 55 33
Fax: +44 1279 62 50 29
Email: sales@jumo.co.uk
Internet: www.jumo.co.uk

JUMO Process Control, Inc.
6733 Myers Road
East Syracuse, NY 13057, USA
Phone: +1 315 437 5866
Fax: +1 315 437 5860
Email: info.us@jumo.net
Internet: www.jumousa.com

Text image

- Numerical display of the measured values from up to 6 analog channels in one group
- Additional display of up to 6 digital channels in one group as a symbol B1 to B6
- Analog channels can be displayed individually

Text image – individual display

- Analog signal also as bar graph with limit values
- Color change in case of an alarm
- Alarm text display

Report

- Display of minimum, maximum, and average value of each analog channel in a group
- Various reporting periods
- Separate report for each group
- Display of current and completed reports

Batch report

- Logging of a batch recording
- Display of the completed batch as a report or curve diagram
- Up to 5 batch recordings simultaneously

Batch-related alarm and event list

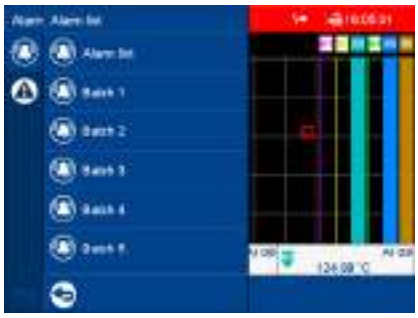

- Separate alarm list and event list for each active batch
- Batch-related entries due to group assignment
- Events and alarms of channels and counters/integrators

Counter/integrator

- Display of the current and the completed counter/integrator
- Status of the counter/integrator with start and stop time
- Bar graph display of the current status with limit values
- Up to 30 counters/integrators simultaneously
- Display of last 7 completed counters/integrators

Process screen

- Display of process data (analog and digital signals) and texts as well as text and value entry
- Up to 10 process screens each with 100 objects
- Library with pictograms (also possible to import own images)
- Individual configuration using the setup program

Web server

The paperless recorder is equipped with a web server function as a standard feature.

JUMO GmbH & Co. KG
Delivery address: Mackenrodtstraße 14
36039 Fulda, Germany
Postal address: 36035 Fulda, Germany
Phone: +49 661 6003-0
Fax: +49 661 6003-607
Email: mail@jumo.net
Internet: www.jumo.net

JUMO Instrument Co. Ltd.
JUMO House
Temple Bank, Riverway
Harlow, Essex, CM20 2DY, UK
Phone: +44 1279 63 55 33
Fax: +44 1279 62 50 29
Email: sales@jumo.co.uk
Internet: www.jumo.co.uk

JUMO Process Control, Inc.
6733 Myers Road
East Syracuse, NY 13057, USA
Phone: +1 315 437 5866
Fax: +1 315 437 5860
Email: info.us@jumo.net
Internet: www.jumousa.com

The web server allows the user to display certain settings, process values, and messages using a web browser:

- Parameters of the user level
- Default visualizations
- Individual process screen
- Data of the recording function (including history)
- Alarm and event list

The display depends on the web browser used and the PC operating system.

PC programs

With basic type extension 1, the paperless recorder will come with a software package consisting of the following PC programs: setup, PCC, and PCA3000. With extra code 888 the software package also includes the PC programs PCS and PCAT (see order details).

PCA communication software PCC

The PCA Communication Software PCC is a PC program for Windows operating systems (7/8/10 – 32/64 bit) for extracting data from the paperless recorder.

- The data can be extracted with a USB flash drive or via an interface (USB device, Ethernet).
- The data can be extracted manually or automatically (for example, every day at 11 pm).

PC Evaluation Software PCA3000

The PC Evaluation Software PCA3000 is a PC program for Windows operating systems (7/8/10 – 32/64 bit) for managing, archiving, visualizing, and evaluating the data from the paperless recorder.

- The data from differently configured devices is detected by the PC Evaluation Software and stored in an archive database. Management is performed fully automatically. All the user has to do is manually enter an ID (additional description).
- The user can access certain data records which are recognizable due to the ID, at any time. The time ranges to be evaluated can also be restricted.
- Any analog and digital channels of a paperless recorder (even from different groups) can be subsequently combined in so-called PCA groups in PCA3000.
- Since each group is shown in its own window, several groups can be displayed on the screen in parallel and compared.
- Using the export filter, it is possible to export the stored data in order to process it in other programs, such as Excel.
- The PC Evaluation Software PCA3000 is network compatible, which means that several users can read the data from the same archived file (*.177) in a network directory independently of one another.
- Batch data or even reports can be automatically printed or made available in the network as PDF files, using the "automatic printout" PCA3000 option in conjunction with the PCC software. The output forms used can be customized.

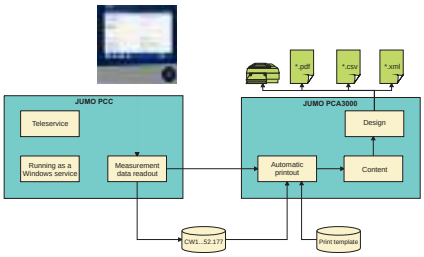

PC Security Manager PCS

Software for administration of device user access control. This software is only accessible to administrators.

The PCS software can only be used for devices with extra code 888, for managing device users.

PC Audit Trail Manager PCAT

Software for the documentation of PC operational actions that could lead to alterations in data recording.

JUMO GmbH & Co. KG
Delivery address: Mackenrodtstraße 14
36039 Fulda, Germany
Postal address: 36035 Fulda, Germany
Phone: +49 661 6003-0
Fax: +49 661 6003-607
Email: mail@jumo.net
Internet: www.jumo.net

JUMO Instrument Co. Ltd.
JUMO House
Temple Bank, Riverway
Harlow, Essex, CM20 2DY, UK
Phone: +44 1279 63 55 33
Fax: +44 1279 62 50 29
Email: sales@jumo.co.uk
Internet: www.jumo.co.uk

JUMO Process Control, Inc.
6733 Myers Road
East Syracuse, NY 13057, USA
Phone: +1 315 437 5866
Fax: +1 315 437 5860
Email: info.us@jumo.net
Internet: www.jumousa.com

Technical data

Analog inputs

General

Number	Max. 18 (see connection diagram)
A/D converter	24 bit delta-sigma
Sampling rate	Up to 18 channels: 125 ms
Input filter	Digital filter, 2nd order; filter constant can be set from 0 to 100.0 s
Galvanic isolation	See "Galvanic isolation"

Thermocouples

Designation	Type	Standard	ITS	Measuring range	Accuracy[a]
Fe-CuNi	"L"	DIN 43710 (1985)	IPTS-68	-200 to +900 °C	≤ 0.1 %
Fe-CuNi	"J"	DIN EN 60584-1:2014 IEC 60584-1:2013	ITS-90	-210 to +1200 °C	≤ 0.1 % from -100 °C
Cu-CuNi	"U"	DIN 43710 (1985)	IPTS-68	-200 to +600 °C	≤ 0.1 % from -100 °C
Cu-CuNi	"T"	DIN EN 60584-1:2014 IEC 60584-1:2013	ITS-90	-270 to +400 °C	≤ 0.1 % from -150 °C
NiCr-Ni	"K"	DIN EN 60584-1:2014 IEC 60584-1:2013	ITS-90	-270 to +1300 °C	≤ 0.1 % from -80 °C
NiCr-CuNi	"E"	DIN EN 60584-1:2014 IEC 60584-1:2013	ITS-90	-270 to +1000 °C	≤ 0.1 % from -80 °C
NiCrSi-NiSi	"N"	DIN EN 60584-1:2014 IEC 60584-1:2013	ITS-90	-270 to +1300 °C	≤ 0.1 % from -80 °C
Pt10Rh-Pt	"S"	DIN EN 60584-1:2014 IEC 60584-1:2013	ITS-90	-50 to +1768 °C	≤ 0.15 % from 100 °C
Pt13Rh-Pt	"R"	DIN EN 60584-1:2014 IEC 60584-1:2013	ITS-90	-50 to +1768 °C	≤ 0.15 % from 100 °C
Pt30Rh-Pt6Rh	"B"	DIN EN 60584-1:2014 IEC 60584-1:2013	ITS-90	0 to 1820 °C	≤ 0.15 % from 600 °C
W5Re-W26Re	"C"	DIN EN 60584-1:2014 IEC 60584-1:2013	ITS-90	0 to 2315 °C	≤ 0.1 % from 500 °C
W3Re-W25Re	"D"	ASTM E1751M-15	ITS-90	0 to 2315 °C	≤ 0.1 % from 500 °C
W5Re-W20Re	"A1"	GOST R 8.585-2001	ITS-90	0 to 2500 °C	≤ 0.1 % from 500 °C
Chromel®-Copel	"L"	GOST R 8.585-2001	ITS-90	-200 to +800 °C	≤ 0.1 % from -80°C
Chromel®-Alumel®	"K"	GOST R 8.585-2001	ITS-90	-270 to +1372 °C	≤ 0.1 % from -80 °C
PLII (Platinel® II)		ASTM E1751M-15	ITS-90	0 to 1395 °C	≤ 0.1 %

Ambient temperature influence	≤ 100 ppm/K
Cold junction	Internal (Pt100) or external (constant)
Cold junction accuracy (internal)	Option with 3 analog inputs (order codes 1 and 2): ± 1 K Option with 6 analog inputs (order code 3): ± 2 K
Cold junction temperature (external)	-30 to +85 °C (adjustable)
Base measuring range	-20 to +70 mV

[a] Accuracy refers to the measuring range.

JUMO GmbH & Co. KG
Delivery address: Mackenrodtstraße 14
36039 Fulda, Germany
Postal address: 36035 Fulda, Germany
Phone: +49 661 6003-0
Fax: +49 661 6003-607
Email: mail@jumo.net
Internet: www.jumo.net

JUMO Instrument Co. Ltd.
JUMO House
Temple Bank, Riverway
Harlow, Essex, CM20 2DY, UK
Phone: +44 1279 63 55 33
Fax: +44 1279 62 50 29
Email: sales@jumo.co.uk
Internet: www.jumo.co.uk

JUMO Process Control, Inc.
6733 Myers Road
East Syracuse, NY 13057, USA
Phone: +1 315 437 5866
Fax: +1 315 437 5860
Email: info.us@jumo.net
Internet: www.jumousa.com

RTD temperature probe

Designation	Standard	ITS	Measuring range	Accuracy[a]	Measuring current
Pt50	DIN EN 60751:2009 IEC 60751:2008	ITS-90	-200 to +850 °C	≤ 0.1 %	500 µA
Pt100	DIN EN 60751:2009 IEC 60751:2008	ITS-90	-200 to +850 °C	≤ 0.1 %	500 µA
Pt500	DIN EN 60751:2009 IEC 60751:2008	ITS-90	-200 to +850 °C	≤ 0.1 %	50 µA
Pt1000	DIN EN 60751:2009 IEC 60751:2008	ITS-90	-200 to +850 °C	≤ 0.1 %	50 µA
Pt100	JIS C 1604:1981	IPTS-68	-200 to +649 °C	≤ 0.1 %	500 µA
Pt50	GOST 6651-2009 A.2	ITS-90	-200 to +850 °C	≤ 0.1 %	500 µA
Pt100	GOST 6651-2009 A.2	ITS-90	-200 to +850 °C	≤ 0.1 %	500 µA
Cu50	GOST 6651-2009 A.3	ITS-90	-180 to +200 °C	≤ 0.4 %	500 µA
Cu100	GOST 6651-2009 A.3	ITS-90	-180 to +200 °C	≤ 0.4 %	500 µA
Ni100	DIN 43760 (1987)	IPTS-68	-60 to +250 °C	≤ 0.2 %	500 µA
Ni100	GOST 6651-2009 A.5	ITS-90	-60 to +180 °C	≤ 0.2 %	500 µA

Connection type	2/3/4-wire
Ambient temperature influence	≤ 50 ppm/K
Sensor line resistance	Max. 10 Ω per cable for two-wire circuit Max. 30 Ω per cable for three/four-wire circuit

[a] Accuracy refers to the measuring range.

Resistance transmitter and resistance/potentiometer

Designation	Measuring range	Accuracy[a]	Measuring current
Resistance transmitter	0 to 4000 Ω	≤ 0.1 %	50 µA
Resistance/potentiometer	0 to 400 Ω	≤ 0.1 %	500 µA
	0 to 4000 Ω	≤ 0.1 %	50 µA

Ambient temperature influence	≤ 100 ppm/K
Connection type	
Resistance transmitter	Three-wire circuit
Resistance/potentiometer	Two/three/four-wire circuit
Smallest measuring span	60 Ω
Sensor line resistance	Max. 10 Ω per cable for two-wire and three-wire circuits
Resistance values	Freely programmable within the limits, in increments of 0.1 Ω

[a] Accuracy refers to the maximum measuring range. Small measuring spans lead to reduced linearization accuracy.

JUMO GmbH & Co. KG
Delivery address: Mackenrodtstraße 14
36039 Fulda, Germany
Postal address: 36035 Fulda, Germany
Phone: +49 661 6003-0
Fax: +49 661 6003-607
Email: mail@jumo.net
Internet: www.jumo.net

JUMO Instrument Co. Ltd.
JUMO House
Temple Bank, Riverway
Harlow, Essex, CM20 2DY, UK
Phone: +44 1279 63 55 33
Fax: +44 1279 62 50 29
Email: sales@jumo.co.uk
Internet: www.jumo.co.uk

JUMO Process Control, Inc.
6733 Myers Road
East Syracuse, NY 13057, USA
Phone: +1 315 437 5866
Fax: +1 315 437 5860
Email: info.us@jumo.net
Internet: www.jumousa.com

Voltage, current (standard signals)

Designation	Measuring range	Accuracy[a]	Input resistance or burden voltage
Voltage	0 to 70 mV	≤ 0.1 %	> 500 kΩ
	0 to 10 V	≤ 0.05 %	> 500 kΩ
	-10 to +10 V	≤ 0.05 %	> 500 kΩ
	-1 to +1 V	≤ 0.08 %	> 500 kΩ
	0 to 1 V	≤ 0.08 %	> 500 kΩ
Current	4 to 20 mA	≤ 0.1 %	< 2 V
	0 to 20 mA	≤ 0.1 %	< 2 V
Ambient temperature influence	≤ 100 ppm/K		
Smallest measuring span Voltage Current	 5 mV 0.5 mA		
Measuring range start/end Voltage Current	 Freely programmable within the limits, in increments of 0.01 mV Freely programmable within the limits, in increments of 0.01 mA		
Deviation below/above the measur. range	According to NAMUR recommendation NE 43 (only current input 4 to 20 mA)		

[a] Accuracy refers to the maximum measuring range. Small measuring spans lead to reduced linearization accuracy.

Measuring circuit monitoring

The device behavior in the event of a malfunction is configurable.

Measuring probe	Probe break	Short-circuit	Polarity
Thermocouple	Is detected	Is not detected	Is detected in certain conditions[a]
RTD temperature probe	Is detected	Is detected	Is not detected
Resistance transmitter	Is detected	Is not detected	Is not detected
Resistance/potentiometer	Is detected	Is not detected	Is not detected
Voltage 0 to 70 mV	Is detected	Is not detected	Is detected
Voltage 0 to 10 V	Is not detected	Is not detected	Is detected
Voltage -10 to +10 V	Is not detected	Is not detected	Is not detected
Voltage 0 to 1 V	Is detected	Is not detected	Is detected
Voltage -1 to +1 V	Is detected	Is not detected	Is not detected
Current 0 to 20 mA	Is not detected	Is not detected	Is not detected
Current 4 to 20 mA	Is detected	Is detected	Is detected

[a] Dependent on the set characteristic line

Analog outputs

Number	Max. 3 (see connection diagram)
Voltage Output signal Load resistance	 DC 0 to 10 V > 500 Ω
Current Output signal Load resistance	 DC 0(4) to 20 mA < 450 Ω
Accuracy	0.5 %
Ambient temperature influence	150 ppm/K

JUMO GmbH & Co. KG
Delivery address: Mackenrodtstraße 14
36039 Fulda, Germany
Postal address: 36035 Fulda, Germany
Phone: +49 661 6003-0
Fax: +49 661 6003-607
Email: mail@jumo.net
Internet: www.jumo.net

JUMO Instrument Co. Ltd.
JUMO House
Temple Bank, Riverway
Harlow, Essex, CM20 2DY, UK
Phone: +44 1279 63 55 33
Fax: +44 1279 62 50 29
Email: sales@jumo.co.uk
Internet: www.jumo.co.uk

JUMO Process Control, Inc.
6733 Myers Road
East Syracuse, NY 13057, USA
Phone: +1 315 437 5866
Fax: +1 315 437 5860
Email: info.us@jumo.net
Internet: www.jumousa.com

Digital inputs

Number	Max. 18 (see connection diagram)
Input	
Level	Logic level 0: < 3.5 V; logic level 1: > 10 V
Sampling rate	125 ms (max. counting frequency: 4 Hz)
Potential-free contact	R_{ON}: < 1 kΩ; R_{OFF}: > 50 kΩ (use of auxiliary voltage 24 V)
High-speed input	
Usable inputs	1, 2, 7, 8, 13, 14 (only for analog(HI)/digital option, see connection diagram)
Function	Counts each positive edge of the input signal
Max. counting frequency	12.5 kHz
Mark-to-space ratio	30 to 70 % (high-pulse ≥ 30 µs, low-pulse ≥ 30 µs)
Accuracy for flow measurement	0.5 % of measured value; ambient temperature influence: 50 ppm/K
Auxiliary voltage supply	
Voltage	DC 24 V +10/-15 %
Current	Max. 50 mA per slot (for analog (HI)/digital option: incl. digital output currents)

Digital inputs/outputs

Number	Max. 24 (see connection diagram)
Input or output	Individually configurable as input or output
Input	
Level	Logic level 0: < 3.5 V; logic level 1: > 10 V
Sampling rate	125 ms (max. counting frequency: 4 Hz)
Potential-free contact	R_{ON}: < 1 kΩ; R_{OFF}: > 50 kΩ (use of auxiliary voltage 24 V)
High-speed input	
Usable inputs	1, 2 (see connection diagram)
Function	Counts each positive edge of the input signal
Max. counting frequency	12.5 kHz
Mark-to-space ratio	30 to 70 % (high-pulse ≥ 30 µs, low-pulse ≥ 30 µs)
Accuracy for flow measurement	0.5 % of measured value; ambient temperature influence: 50 ppm/K
Output	
Output signal	DC 0/24 V +10/-15 %; galvanically isolated
Current at option	
- Analog(HI)/digital	Max. 40 mA per output, max. 50 mA in total per slot (including auxiliary voltage supply current)
- Digital	Max. 40 mA per output, max. 100 mA in total (including auxiliary voltage supply current)
Auxiliary voltage supply	
Voltage	DC 24 V +10/-15 %
Current at option	
- Analog(HI)/digital	Max. 50 mA per slot (including digital outputs current)
- Digital	Max. 100 mA (including digital outputs current)

Relays

Number	Max. 7 (see connection diagram)
Relay (changeover contact)	
Switching capacity	3 A at AC 230 V or DC 30 V, resistive load
Contact life	30,000 switching operations at rated load

JUMO GmbH & Co. KG
Delivery address: Mackenrodtstraße 14
36039 Fulda, Germany
Postal address: 36035 Fulda, Germany
Phone: +49 661 6003-0
Fax: +49 661 6003-607
Email: mail@jumo.net
Internet: www.jumo.net

JUMO Instrument Co. Ltd.
JUMO House
Temple Bank, Riverway
Harlow, Essex, CM20 2DY, UK
Phone: +44 1279 63 55 33
Fax: +44 1279 62 50 29
Email: sales@jumo.co.uk
Internet: www.jumo.co.uk

JUMO Process Control, Inc.
6733 Myers Road
East Syracuse, NY 13057, USA
Phone: +1 315 437 5866
Fax: +1 315 437 5860
Email: info.us@jumo.net
Internet: www.jumousa.com

Interfaces

RS232/RS485	
Number	1 (can be switched between RS232 and RS485)
Connector type	SUB-D 9-pin (socket)
Baud rate	4800, 9600, 19200, 38400, 115200
Data format	8/1n, 8/1e, 8/1o
Protocol	Modbus RTU as master or slave, barcode scanner, NMEA 0183
Application	Communication with Modbus master/slave, connection of a barcode scanner or a GPS receiver
External inputs	Via Modbus master/slave functionality: 120 analog and 120 digital inputs, 64 batch texts, 10 event texts
Ethernet	
Number	1 (alternative to PROFINET interface)
Connector type	RJ45 (socket)
Transfer rate	10 Mbit/s, 100 Mbit/s
Protocol	IPv4; TCP, UDP; DHCP, DNS, HTTP, SMTP, SNTP, Modbus-TCP
Application	Communication with PC (setup program, data archiving, web server), email server, SNTP server, and Modbus master/slave
External inputs	Via Modbus master/slave functionality: 120 analog and 120 digital inputs, 64 batch texts, 10 event texts
Max. cable length	100 m
PROFINET IO device	
Number	1 (alternative to Ethernet interface)
Connector type	2 x RJ45 (socket), integrated switch
Transfer rate	100 Mbit/s
Conformity class	B (CC-B)
Netload class	III (Netload Class III)
Protocol	DCP, LLDP, VLAN Priority, PTCP
Application	Communication with PROFINET IO controller; Ethernet standard services are also supported
Max. cable length	100 m
USB host	
Number	1 (on front with cover)
Connector type	A (socket)
Standard	USB 2.0 (high speed)
Application	Exclusively for connecting a USB flash drive (FAT16/FAT32; see accessories)
Max. load current	100 mA
USB device	
Number	1 (on the back)
Connector type	Micro-B (socket)
Standard	USB 2.0 (high speed)
Application	To connect to a PC (setup program, PCC/PCA3000)
Max. cable length	5 m

JUMO GmbH & Co. KG
Delivery address: Mackenrodtstraße 14
36039 Fulda, Germany
Postal address: 36035 Fulda, Germany
Phone: +49 661 6003-0
Fax: +49 661 6003-607
Email: mail@jumo.net
Internet: www.jumo.net

JUMO Instrument Co. Ltd.
JUMO House
Temple Bank, Riverway
Harlow, Essex, CM20 2DY, UK
Phone: +44 1279 63 55 33
Fax: +44 1279 62 50 29
Email: sales@jumo.co.uk
Internet: www.jumo.co.uk

JUMO Process Control, Inc.
6733 Myers Road
East Syracuse, NY 13057, USA
Phone: +1 315 437 5866
Fax: +1 315 437 5860
Email: info.us@jumo.net
Internet: www.jumousa.com

Screen

Type	TFT color screen/TFT-touchscreen (resistive)[a]
Size	14.5 cm (5.7")
Resolution	640 × 480 pixels (VGA)
Number of colors	65536
Frame rate	60 Hz (type)
Brightness setting	Adjustable on the device
Screensaver (switch-off)	After waiting period or due to control signal

[a] TFT color screens may have pixel errors due to technological and/or production-related reasons. Up to four pixel errors are deemed admissible for this paperless recorder; they do not provide the ground for warranty claims.

Electrical data

Voltage supply	AC 110 to 240 V +10/-15 %, 48 to 63 Hz or AC/DC 20 to 30 V, 48 to 63 Hz (not in conjunction with extra code 970)
Electrical safety	According to DIN EN 61010-1 Overvoltage category II to 300 V mains voltage, pollution degree 2
⚠ Analog inputs of option "Analog(HI)/digital"	According to DIN EN 61010-1 Measuring category II (CAT II) up to AC 300 V (rms value, line to neutral) or DC 300 V mains voltage
Protection rating	I with internal isolation from SELV
Power consumption	
AC 110 to 240 V	< 45 VA
AC/DC 20 to 30 V	< 35 VA
Data backup	Internal flash memory
Data buffering	Battery (operating life > 7 years); additionally, storage capacitor for buffering during battery change (buffer time approx. 2 minutes)
Time	Battery-buffered real-time clock
Electrical connection	On the back via push-in spring-cage terminals
Conductor cross section on terminal 5	
Wire or stranded wire without ferrule	Min. 0.2 mm^2, max. 2.5 mm^2
Stranded wire with ferrule	Min. 0.2 mm^2, max. 2.5 mm^2
2 × stranded wire with twin ferrule with plastic collar	Min. 0.5 mm^2, max. 1.5 mm^2 (both stranded wires with identical cross section)
Stripping length	10 mm
Conductor cross section on terminals 4, 24 to 29	
Wire or stranded wire without ferrule	Min. 0.2 mm^2, max. 2.5 mm^2 (with terminal cover: max. 1.5 mm^2)
Stranded wire with ferrule	Min. 0.25 mm^2, max. 2.5 mm^2 (with terminal cover: max. 1.5 mm^2)
Stripping length	10 mm
Conductor cross section on terminals 6 to 23	
Wire or stranded wire without ferrule	Min. 0.14 mm^2, max. 1.5 mm^2 (with terminal cover: max. 0.5 mm^2)
Stranded wire with ferrule	Without plastic collar: min. 0.25 mm^2, max. 1.5 mm^2 (with terminal cover: max. 0.5 mm^2) With plastic collar: min. 0.25 mm^2, max. 0.5 mm^2
Stripping length	9 mm

JUMO GmbH & Co. KG
Delivery address: Mackenrodtstraße 14
36039 Fulda, Germany
Postal address: 36035 Fulda, Germany
Phone: +49 661 6003-0
Fax: +49 661 6003-607
Email: mail@jumo.net
Internet: www.jumo.net

JUMO Instrument Co. Ltd.
JUMO House
Temple Bank, Riverway
Harlow, Essex, CM20 2DY, UK
Phone: +44 1279 63 55 33
Fax: +44 1279 62 50 29
Email: sales@jumo.co.uk
Internet: www.jumo.co.uk

JUMO Process Control, Inc.
6733 Myers Road
East Syracuse, NY 13057, USA
Phone: +1 315 437 5866
Fax: +1 315 437 5860
Email: info.us@jumo.net
Internet: www.jumousa.com

Environmental influences

Ambient temperature range	
Storage	-20 to +60 °C
Operation	-20 to +50 °C[a]; in conjunction with extra code 970: 0 to 40 °C
Site altitude	Max. 2000 m above sea level
Climatic environmental influences	According to DIN EN 60721-3 with extended temperature range
Resistance to climatic conditions	≤ 85 % rel. humidity without condensation
Storage	According to class 1K2
Operation	According to class 3K3
Mechanical environmental influences	According to DIN EN 60721-3
Storage	According to class 1M2
Transport	According to class 2M2
Operation	According to class 3M3
Electromagnetic compatibility (EMC)	According to DIN EN 61326-1
Interference emission	Class A – only for industrial use –
Interference immunity	Industrial requirements

[a] At temperatures below 0 °C, the build-up of screen contents slows down.

Case

Case type	Flush-mounted housing according to DIN IEC 61554 made of zinc-plated steel sheet (indoor use)
Case front	Made of die-cast zinc with decor foil
Front frame dimensions	144 mm x 144 mm (front frame depth approx. 8 mm including seal)
Mounting depth	120.9 mm (incl. spring-cage terminals)
Panel cut-out	$138^{+1.0}$ mm × $138^{+1.0}$ mm
Panel thickness	2 to 8 mm
Case fastening	In panel using the four supplied mounting elements
Operating position	Any, with due consideration for the viewing angle of the screen, horizontal ±50°, vertical ±30°
Protection type	According to DIN EN 60529, front IP66, back IP20; in conjunction with extra code 970: IP20 with open carrying case, IP20D with closed carrying case
Weight	Max. 1.75 kg (without terminal cover)

Approvals and approval marks

Approval mark	Testing facility	Certificate/certification number	Inspection basis	Valid for
c UL us	Underwriters Laboratories	E201387	UL 61010-1 (3. Ed.), CAN/CSA-22.2 No. 61010-1 (3rd Ed.)	All versions of the built-in device; not in conjunction with extra code 970

The device is approved if the approval mark is shown on the device.

JUMO GmbH & Co. KG
Delivery address: Mackenrodtstraße 14
36039 Fulda, Germany
Postal address: 36035 Fulda, Germany
Phone: +49 661 6003-0
Fax: +49 661 6003-607
Email: mail@jumo.net
Internet: www.jumo.net

JUMO Instrument Co. Ltd.
JUMO House
Temple Bank, Riverway
Harlow, Essex, CM20 2DY, UK
Phone: +44 1279 63 55 33
Fax: +44 1279 62 50 29
Email: sales@jumo.co.uk
Internet: www.jumo.co.uk

JUMO Process Control, Inc.
6733 Myers Road
East Syracuse, NY 13057, USA
Phone: +1 315 437 5866
Fax: +1 315 437 5860
Email: info.us@jumo.net
Internet: www.jumousa.com

Dimensions

Device

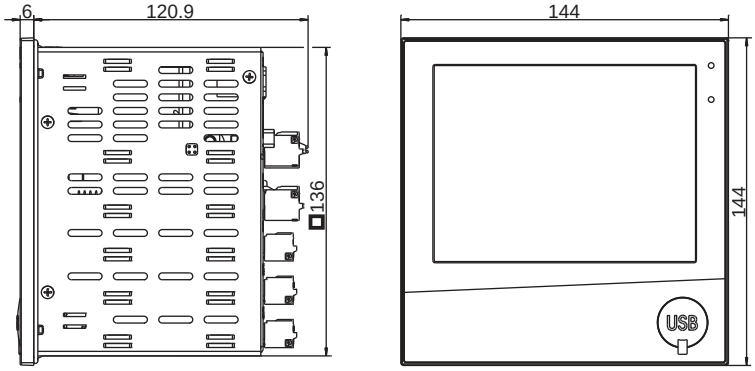

Panel cut-out

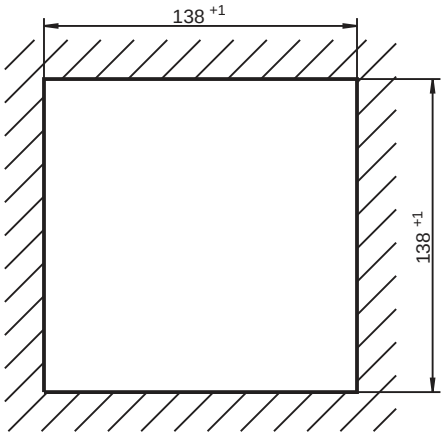

Close mounting

Distance between panel cut-outs	Horizontal	Vertical
Minimum clearance	20 mm	20 mm
Recommended distance (easier mounting of mounting elements)	50 mm	50 mm

Device with terminal cover (accessories)

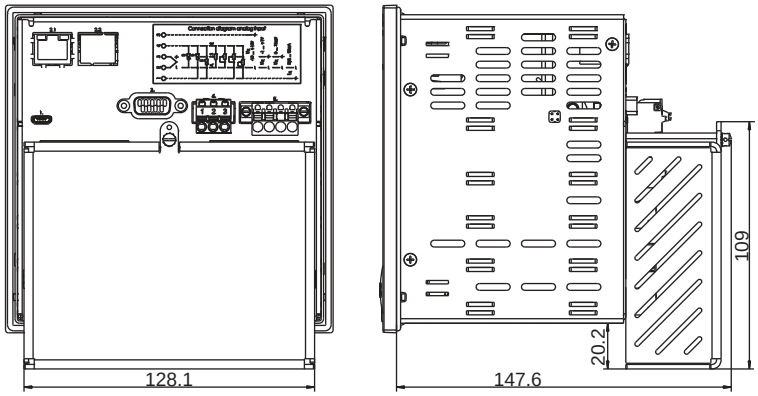

JUMO GmbH & Co. KG
Delivery address: Mackenrodtstraße 14
36039 Fulda, Germany
Postal address: 36035 Fulda, Germany
Phone: +49 661 6003-0
Fax: +49 661 6003-607
Email: mail@jumo.net
Internet: www.jumo.net

JUMO Instrument Co. Ltd.
JUMO House
Temple Bank, Riverway
Harlow, Essex, CM20 2DY, UK
Phone: +44 1279 63 55 33
Fax: +44 1279 62 50 29
Email: sales@jumo.co.uk
Internet: www.jumo.co.uk

JUMO Process Control, Inc.
6733 Myers Road
East Syracuse, NY 13057, USA
Phone: +1 315 437 5866
Fax: +1 315 437 5860
Email: info.us@jumo.net
Internet: www.jumousa.com

Universal carrying case, compact (extra code 970)

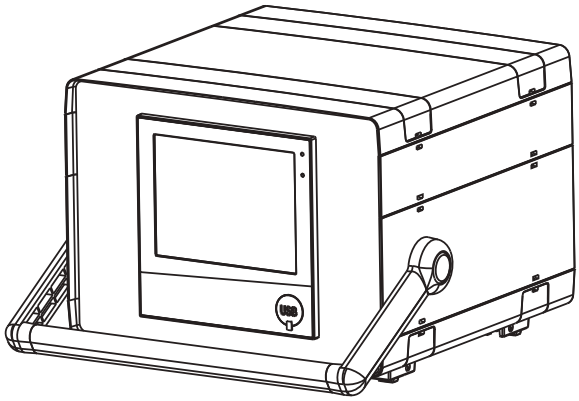

Dimensions

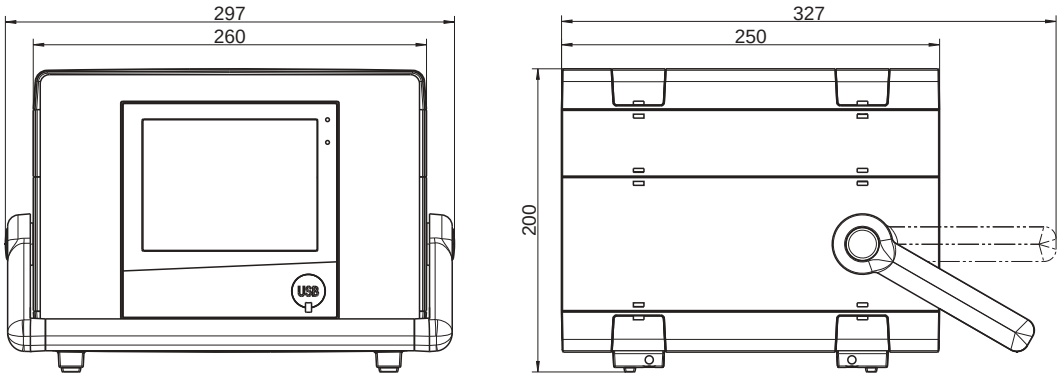

JUMO GmbH & Co. KG
Delivery address: Mackenrodtstraße 14
36039 Fulda, Germany
Postal address: 36035 Fulda, Germany
Phone: +49 661 6003-0
Fax: +49 661 6003-607
Email: mail@jumo.net
Internet: www.jumo.net

JUMO Instrument Co. Ltd.
JUMO House
Temple Bank, Riverway
Harlow, Essex, CM20 2DY, UK
Phone: +44 1279 63 55 33
Fax: +44 1279 62 50 29
Email: sales@jumo.co.uk
Internet: www.jumo.co.uk

JUMO Process Control, Inc.
6733 Myers Road
East Syracuse, NY 13057, USA
Phone: +1 315 437 5866
Fax: +1 315 437 5860
Email: info.us@jumo.net
Internet: www.jumousa.com

Galvanic isolation

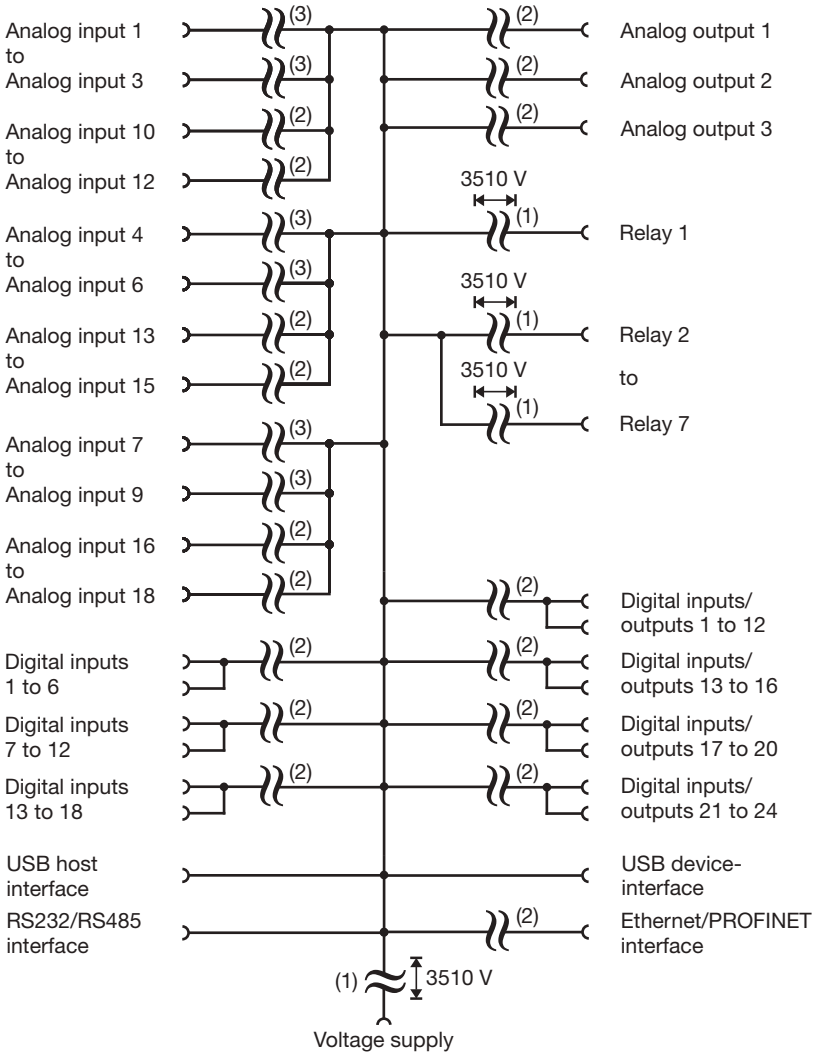

(1) The voltage specifications correspond to the test voltages (alternating voltage, rms values) according to EN 61010-1:2011-07 for the type test.

(2) Functional galvanic isolation for connection of SELV or PELV electrical circuits.

(3) For the options "analog/digital" and "analog": functional galvanic isolation for connection of SELV or PELV electrical circuits.
For the option "analog(HI)/digital": test voltage 3510 V (alternating voltage, rms value) according to EN 61010-1:2011-07 for the type test.

JUMO GmbH & Co. KG
Delivery address: Mackenrodtstraße 14
36039 Fulda, Germany
Postal address: 36035 Fulda, Germany
Phone: +49 661 6003-0
Fax: +49 661 6003-607
Email: mail@jumo.net
Internet: www.jumo.net

JUMO Instrument Co. Ltd.
JUMO House
Temple Bank, Riverway
Harlow, Essex, CM20 2DY, UK
Phone: +44 1279 63 55 33
Fax: +44 1279 62 50 29
Email: sales@jumo.co.uk
Internet: www.jumo.co.uk

JUMO Process Control, Inc.
6733 Myers Road
East Syracuse, NY 13057, USA
Phone: +1 315 437 5866
Fax: +1 315 437 5860
Email: info.us@jumo.net
Internet: www.jumousa.com

Connection elements

Front USB host interface (without cover)

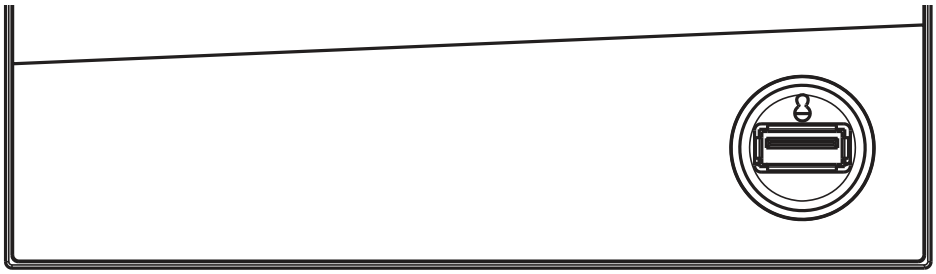

Back connection elements

This graphic shows an example with specific options.

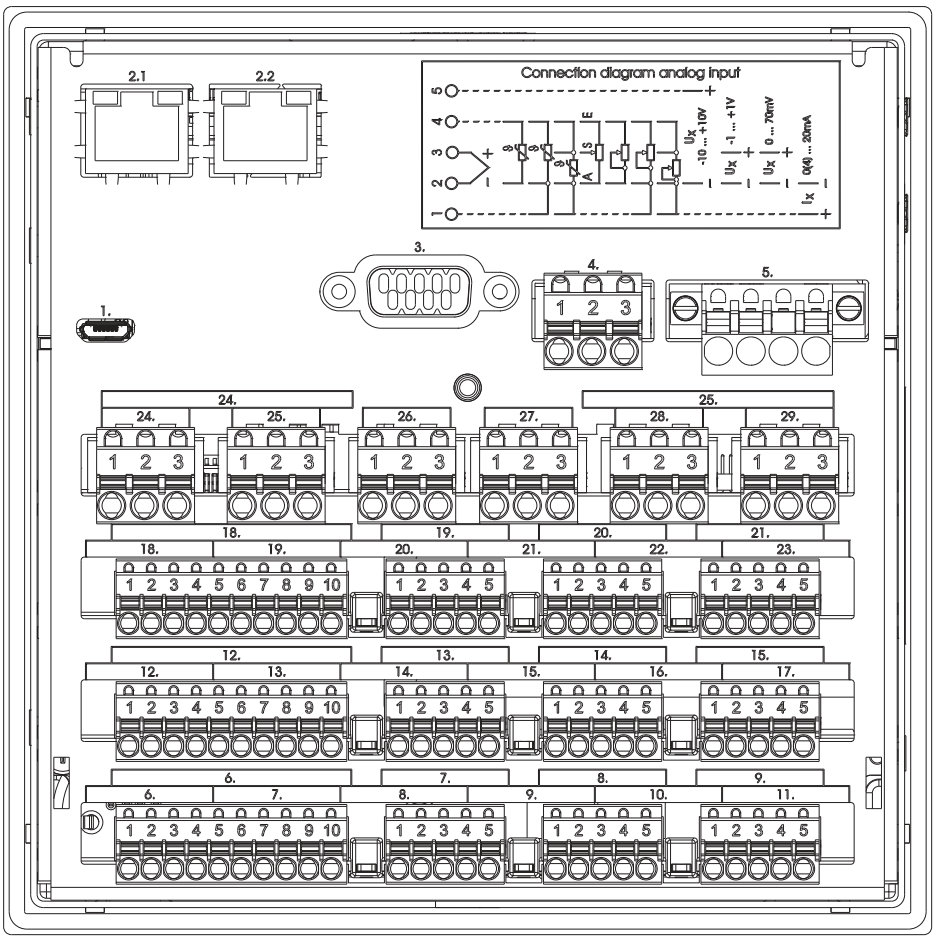

Connection element and assignment	
1.	USB device interface
2.1	Ethernet interface (as a standard feature) or
2.1, 2.2	PROFINET interface (including Ethernet; extra code): 2.1 = port 2, 2.2 = port 1
3.	RS232/RS485 interface

Connection element and assignment	
4.	Relay 1 (changeover contact)
5.	Voltage supply
6. - 29.	Option inputs and outputs (Slot 1 to Slot 4)

JUMO GmbH & Co. KG
Delivery address: Mackenrodtstraße 14
36039 Fulda, Germany
Postal address: 36035 Fulda, Germany
Phone: +49 661 6003-0
Fax: +49 661 6003-607
Email: mail@jumo.net
Internet: www.jumo.net

JUMO Instrument Co. Ltd.
JUMO House
Temple Bank, Riverway
Harlow, Essex, CM20 2DY, UK
Phone: +44 1279 63 55 33
Fax: +44 1279 62 50 29
Email: sales@jumo.co.uk
Internet: www.jumo.co.uk

JUMO Process Control, Inc.
6733 Myers Road
East Syracuse, NY 13057, USA
Phone: +1 315 437 5866
Fax: +1 315 437 5860
Email: info.us@jumo.net
Internet: www.jumousa.com

Connection diagram

The connection diagram in the data sheet provides preliminary information about the connection options. For the electrical connection, only use the quick start guide or the operating manual. The knowledge and the correct technical execution with the safety information and warnings contained in these documents are mandatory for mounting, electrical connection, and startup as well as for safety during operation.

Analog inputs

Measuring probe	**Terminals and connection symbol**	**Connection element.terminal / assignment**
Thermocouple	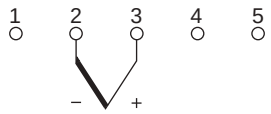	**Analog/digital option (order code 1) or analog(HI)/digital option (order code 2):** 7.1-5 / Analog input 1 8.1-5 / Analog input 2 9.1-5 / Analog input 3 13.1-5 / Analog input 4 14.1-5 / Analog input 5 15.1-5 / Analog input 6 19.1-5 / Analog input 7 20.1-5 / Analog input 8 21.1-5 / Analog input 9 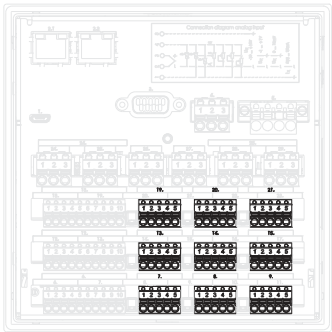
RTD temperature probe Two-wire circuit	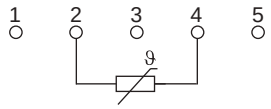	
RTD temperature probe Three-wire circuit	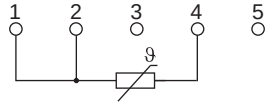	
RTD temperature probe Four-wire circuit	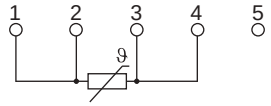	
Resistance transmitter	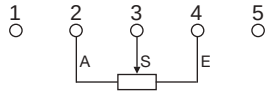	
Resistance/potentiometer Two-wire circuit	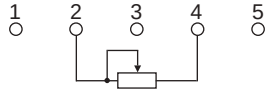	

JUMO GmbH & Co. KG
Delivery address: Mackenrodtstraße 14
36039 Fulda, Germany
Postal address: 36035 Fulda, Germany
Phone: +49 661 6003-0
Fax: +49 661 6003-607
Email: mail@jumo.net
Internet: www.jumo.net

JUMO Instrument Co. Ltd.
JUMO House
Temple Bank, Riverway
Harlow, Essex, CM20 2DY, UK
Phone: +44 1279 63 55 33
Fax: +44 1279 62 50 29
Email: sales@jumo.co.uk
Internet: www.jumo.co.uk

JUMO Process Control, Inc.
6733 Myers Road
East Syracuse, NY 13057, USA
Phone: +1 315 437 5866
Fax: +1 315 437 5860
Email: info.us@jumo.net
Internet: www.jumousa.com

Measuring probe	**Terminals and connection symbol**	**Connection element.terminal / assignment**
Resistance/potentiometer Three-wire circuit	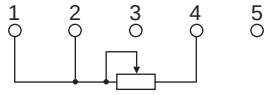	**Analog option (order code 3):** 6.1-5 / Analog input 10 7.1-5 / Analog input 11 8.1-5 / Analog input 12 9.1-5 / Analog input 1 10.1-5 / Analog input 2 11.1-5 / Analog input 3 12.1-5 / Analog input 13 13.1-5 / Analog input 14 14.1-5 / Analog input 15 15.1-5 / Analog input 4 16.1-5 / Analog input 5 17.1-5 / Analog input 6 18.1-5 / Analog input 16 19.1-5 / Analog input 17 20.1-5 / Analog input 18 21.1-5 / Analog input 7 22.1-5 / Analog input 8 23.1-5 / Analog input 9 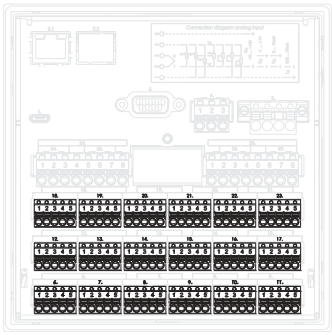
Resistance/potentiometer Four-wire circuit	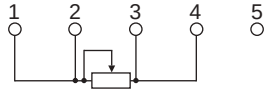	
Voltage DC -10(0) to +10 V	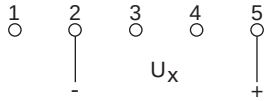	
Voltage DC -1(0) to +1 V	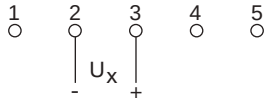	
Voltage DC 0 to 70 mV		
Current DC 0(4) to 20 mA		

JUMO GmbH & Co. KG
Delivery address: Mackenrodtstraße 14
36039 Fulda, Germany
Postal address: 36035 Fulda, Germany
Phone: +49 661 6003-0
Fax: +49 661 6003-607
Email: mail@jumo.net
Internet: www.jumo.net

JUMO Instrument Co. Ltd.
JUMO House
Temple Bank, Riverway
Harlow, Essex, CM20 2DY, UK
Phone: +44 1279 63 55 33
Fax: +44 1279 62 50 29
Email: sales@jumo.co.uk
Internet: www.jumo.co.uk

JUMO Process Control, Inc.
6733 Myers Road
East Syracuse, NY 13057, USA
Phone: +1 315 437 5866
Fax: +1 315 437 5860
Email: info.us@jumo.net
Internet: www.jumousa.com

Analog outputs

Version	Terminals and connection symbol	Connection element.terminal / assignment
Analog output DC 0 to 10 V or DC 0(4) to 20 mA (configurable)	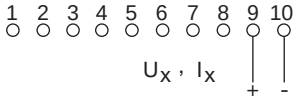	**Analog/digital option (order code 1):** 6.9 / Analog output 1 + 6.10 / Analog output 1 - 12.9 / Analog output 2 + 12.10 / Analog output 2 - 18.9 / Analog output 3 + 18.10 / Analog output 3 - 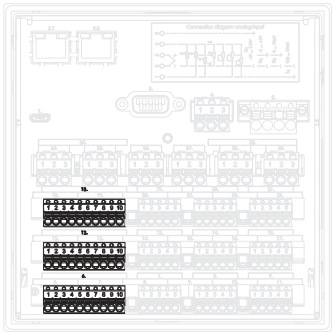

JUMO GmbH & Co. KG
Delivery address: Mackenrodtstraße 14
36039 Fulda, Germany
Postal address: 36035 Fulda, Germany
Phone: +49 661 6003-0
Fax: +49 661 6003-607
Email: mail@jumo.net
Internet: www.jumo.net

JUMO Instrument Co. Ltd.
JUMO House
Temple Bank, Riverway
Harlow, Essex, CM20 2DY, UK
Phone: +44 1279 63 55 33
Fax: +44 1279 62 50 29
Email: sales@jumo.co.uk
Internet: www.jumo.co.uk

JUMO Process Control, Inc.
6733 Myers Road
East Syracuse, NY 13057, USA
Phone: +1 315 437 5866
Fax: +1 315 437 5860
Email: info.us@jumo.net
Internet: www.jumousa.com

Digital inputs

Version	Terminals and connection symbol	Connection element.terminal / assignment
Digital input DC 0/24 V, auxiliary voltage supply DC 24 V	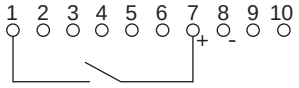 Example: potential-free contact on digital input 1 and +24 V (auxiliary voltage) 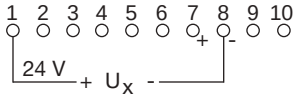 Example: external voltage on digital input 1 and GND	**Analog/digital option (order code 1):** 6.1 / Digital input 1 6.2 / Digital input 2 6.3 / Digital input 3 6.4 / Digital input 4 6.5 / Digital input 5 6.6 / Digital input 6 6.7 / +24 V 6.8 / GND 12.1 / Digital input 7 12.2 / Digital input 8 12.3 / Digital input 9 12.4 / Digital input 10 12.5 / Digital input 11 12.6 / Digital input 12 12.7 / +24 V 12.8 / GND 18.1 / Digital input 13 18.2 / Digital input 14 18.3 / Digital input 15 18.4 / Digital input 16 18.5 / Digital input 17 18.6 / Digital input 18 18.7 / +24 V 18.8 / GND 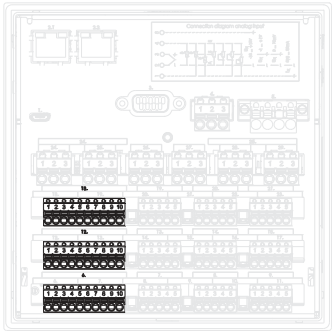

JUMO GmbH & Co. KG
Delivery address: Mackenrodtstraße 14
36039 Fulda, Germany
Postal address: 36035 Fulda, Germany
Phone: +49 661 6003-0
Fax: +49 661 6003-607
Email: mail@jumo.net
Internet: www.jumo.net

JUMO Instrument Co. Ltd.
JUMO House
Temple Bank, Riverway
Harlow, Essex, CM20 2DY, UK
Phone: +44 1279 63 55 33
Fax: +44 1279 62 50 29
Email: sales@jumo.co.uk
Internet: www.jumo.co.uk

JUMO Process Control, Inc.
6733 Myers Road
East Syracuse, NY 13057, USA
Phone: +1 315 437 5866
Fax: +1 315 437 5860
Email: info.us@jumo.net
Internet: www.jumousa.com

Version	**Terminals and connection symbol**	**Connection element.terminal / assignment**
Digital input DC 0/24 V, auxiliary voltage supply DC 24 V	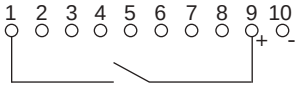 Example: potential-free contact on digital input 1 and +24 V (auxiliary voltage) 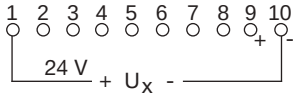 Example: external voltage on digital input 1 and GND	**Analog(HI)/digital option (order code 2):** 6.1 / Digital input 1 6.2 / Digital input 2 6.3 / Digital input 3 6.4 / Digital input 4 6.9 / +24 V 6.10 / GND 12.1 / Digital input 7 12.2 / Digital input 8 12.3 / Digital input 9 12.4 / Digital input 10 12.9 / +24 V 12.10 / GND 18.1 / Digital input 13 18.2 / Digital input 14 18.3 / Digital input 15 18.4 / Digital input 16 18.9 / +24 V 18.10 / GND 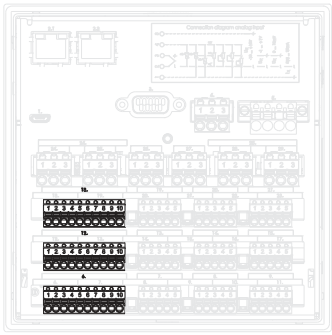

JUMO GmbH & Co. KG
Delivery address: Mackenrodtstraße 14
36039 Fulda, Germany
Postal address: 36035 Fulda, Germany
Phone: +49 661 6003-0
Fax: +49 661 6003-607
Email: mail@jumo.net
Internet: www.jumo.net

JUMO Instrument Co. Ltd.
JUMO House
Temple Bank, Riverway
Harlow, Essex, CM20 2DY, UK
Phone: +44 1279 63 55 33
Fax: +44 1279 62 50 29
Email: sales@jumo.co.uk
Internet: www.jumo.co.uk

JUMO Process Control, Inc.
6733 Myers Road
East Syracuse, NY 13057, USA
Phone: +1 315 437 5866
Fax: +1 315 437 5860
Email: info.us@jumo.net
Internet: www.jumousa.com

Digital inputs/outputs

Version	Terminals and connection symbol	Connection element.terminal / assignment
Digital input DC 0/24 V or digital output DC 0/24 V (individually switchable), auxiliary voltage supply DC 24 V Note regarding the digital option: Auxiliary voltage supply and digital outputs together deliver max. 100 mA (at 24 V).	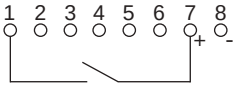 Example: potential-free contact on digital input/output 1 (as input) and +24 V (auxiliary voltage) 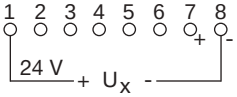 Example: external voltage on digital input/output 1 (as input) and GND 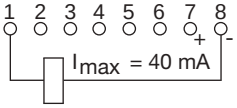 Example: external relay on digital input/output 1 (as output) and GND (max. 40 mA per output, max. 100 mA in total, see note in the "Version" column)	**Digital option (order code 4):** 24.1 / Digital input/output 1 24.2 / Digital input/output 2 24.3 / Digital input/output 3 24.4 / Digital input/output 4 24.5 / Digital input/output 5 24.6 / Digital input/output 6 24.7 / +24 V 24.8 / GND 25.1 / Digital input/output 7 25.2 / Digital input/output 8 25.3 / Digital input/output 9 25.4 / Digital input/output 10 25.5 / Digital input/output 11 25.6 / Digital input/output 12 25.7 / +24 V 25.8 / GND 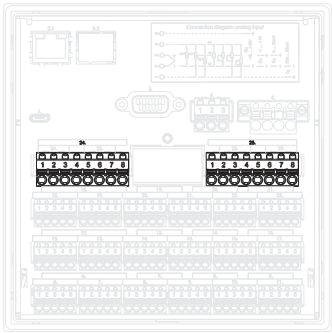

JUMO GmbH & Co. KG
Delivery address: Mackenrodtstraße 14
36039 Fulda, Germany
Postal address: 36035 Fulda, Germany
Phone: +49 661 6003-0
Fax: +49 661 6003-607
Email: mail@jumo.net
Internet: www.jumo.net

JUMO Instrument Co. Ltd.
JUMO House
Temple Bank, Riverway
Harlow, Essex, CM20 2DY, UK
Phone: +44 1279 63 55 33
Fax: +44 1279 62 50 29
Email: sales@jumo.co.uk
Internet: www.jumo.co.uk

JUMO Process Control, Inc.
6733 Myers Road
East Syracuse, NY 13057, USA
Phone: +1 315 437 5866
Fax: +1 315 437 5860
Email: info.us@jumo.net
Internet: www.jumousa.com

Version	**Terminals and connection symbol**	**Connection element.terminal / assignment**
Digital input DC 0/24 V or digital output DC 0/24 V (individually switchable), auxiliary voltage supply DC 24 V Note regarding analog(HI)/digital option: Auxiliary voltage supply and digital outputs together deliver max. 50 mA per slot (at 24 V).	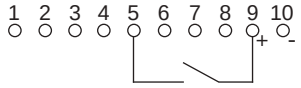 Example: potential-free contact on digital input/output 13 (as input) and +24 V (auxiliary voltage) 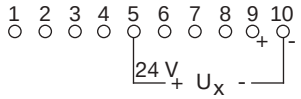 Example: external voltage on digital input/output 13 (as input) and GND 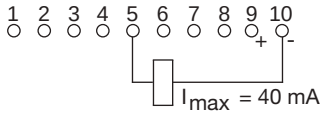 Example: external relay on digital input/output 1 (as output) and GND (max. 40 mA per output, max. 50 mA in total, see note in the "Version" column)	**Analog(HI)/digital option (order code 2):** 6.5 / Digital input/output 13 6.6 / Digital input/output 14 6.7 / Digital input/output 15 6.8 / Digital input/output 16 6.9 / +24 V 6.10 / GND 12.5 / Digital input/output 17 12.6 / Digital input/output 18 12.7 / Digital input/output 19 12.8 / Digital input/output 20 12.9 / +24 V 12.10 / GND 18.5 / Digital input/output 21 18.6 / Digital input/output 22 18.7 / Digital input/output 23 18.8 / Digital input/output 24 18.9 / +24 V 18.10 / GND 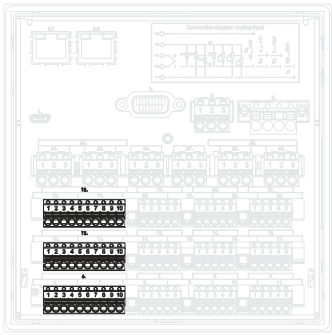

JUMO GmbH & Co. KG
Delivery address: Mackenrodtstraße 14
36039 Fulda, Germany
Postal address: 36035 Fulda, Germany
Phone: +49 661 6003-0
Fax: +49 661 6003-607
Email: mail@jumo.net
Internet: www.jumo.net

JUMO Instrument Co. Ltd.
JUMO House
Temple Bank, Riverway
Harlow, Essex, CM20 2DY, UK
Phone: +44 1279 63 55 33
Fax: +44 1279 62 50 29
Email: sales@jumo.co.uk
Internet: www.jumo.co.uk

JUMO Process Control, Inc.
6733 Myers Road
East Syracuse, NY 13057, USA
Phone: +1 315 437 5866
Fax: +1 315 437 5860
Email: info.us@jumo.net
Internet: www.jumousa.com

Relays

Version	Terminals and connection symbol	Connection element.terminal / assignment
Relay (changeover contact) (max. 3 A at AC 230 V, resistive load)	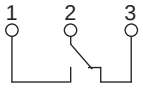	**As a standard feature:** Relay 1: 4.1 / Normally open contact (NO) 4.2 / Common contact (C) 4.3 / Normally closed contact (NC) **Relay option** **(order code 5):** Relay 2: 24.1 / Normally open contact (NO) 24.2 / Common contact (C) 24.3 / Normally closed contact (NC) Relay 3: 25.1 / Normally open contact (NO) 25.2 / Common contact (C) 25.3 / Normally closed contact (NC) Relay 4: 26.1 / Normally open contact (NO) 26.2 / Common contact (C) 26.3 / Normally closed contact (NC) Relay 5: 27.1 / Normally open contact (NO) 27.2 / Common contact (C) 27.3 / Normally closed contact (NC) Relay 6: 28.1 / Normally open contact (NO) 28.2 / Common contact (C) 28.3 / Normally closed contact (NC) Relay 7: 29.1 / Normally open contact (NO) 29.2 / Common contact (C) 29.3 / Normally closed contact (NC) 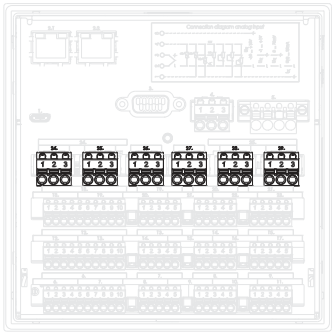

JUMO GmbH & Co. KG
Delivery address: Mackenrodtstraße 14
36039 Fulda, Germany
Postal address: 36035 Fulda, Germany
Phone: +49 661 6003-0
Fax: +49 661 6003-607
Email: mail@jumo.net
Internet: www.jumo.net

JUMO Instrument Co. Ltd.
JUMO House
Temple Bank, Riverway
Harlow, Essex, CM20 2DY, UK
Phone: +44 1279 63 55 33
Fax: +44 1279 62 50 29
Email: sales@jumo.co.uk
Internet: www.jumo.co.uk

JUMO Process Control, Inc.
6733 Myers Road
East Syracuse, NY 13057, USA
Phone: +1 315 437 5866
Fax: +1 315 437 5860
Email: info.us@jumo.net
Internet: www.jumousa.com

RS232/RS485 interface

Version	Connection element.pin / assignment	Connection element
RS232 9-pin SUB-D socket (switchable to RS485)	3.2 / RxD (received data) 3.3 / TxD (transmission data) 3.5 / GND (ground)	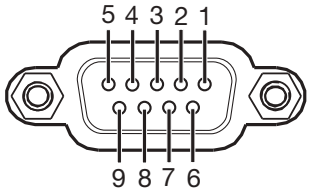
RS485 9-pin SUB-D socket (switchable to RS232)	3.3 / TxD+/RxD+ (transmission/received data +) 3.5 / GND (ground) 3.8 / TxD-/RxD- (transmission/received data -)	

Ethernet/PROFINET

Version	Connection element.pin / assignment	Connection element
Ethernet 1 x RJ45 (as a standard feature)	2.1.1 / TX+ (transmission data +) 2.1.2 / TX- (transmission data -) 2.1.3 / RX+ (received data +) 2.1.6 / RX- (received data -)	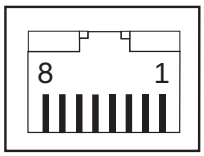
PROFINET IO device (incl. Ethernet) 2 x RJ45, integrated switch (as extra code)	Port 2: 2.1.1 / TX+ (transmission data +) 2.1.2 / TX- (transmission data -) 2.1.3 / RX+ (received data +) 2.1.6 / RX- (received data -) Port 1: 2.2.1 / TX+ (transmission data +) 2.2.2 / TX- (transmission data -) 2.2.3 / RX+ (received data +) 2.2.6 / RX- (received data -)	

Voltage supply

Version	Connection element.terminal / assignment	Terminals and connection symbol
AC 110 to 240 V +10/-15 %, 48 to 63 Hz **or** AC/DC 20 to 30 V, 48 to 63 Hz **Observe order details!**	5.L1 / Line conductor (for DC: positive terminal L+) 5.N / Neutral conductor (for DC: negative terminal L-) 5.PE / Protection conductor	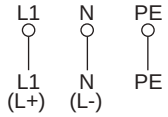

JUMO GmbH & Co. KG
Delivery address: Mackenrodtstraße 14
36039 Fulda, Germany
Postal address: 36035 Fulda, Germany
Phone: +49 661 6003-0
Fax: +49 661 6003-607
Email: mail@jumo.net
Internet: www.jumo.net

JUMO Instrument Co. Ltd.
JUMO House
Temple Bank, Riverway
Harlow, Essex, CM20 2DY, UK
Phone: +44 1279 63 55 33
Fax: +44 1279 62 50 29
Email: sales@jumo.co.uk
Internet: www.jumo.co.uk

JUMO Process Control, Inc.
6733 Myers Road
East Syracuse, NY 13057, USA
Phone: +1 315 437 5866
Fax: +1 315 437 5860
Email: info.us@jumo.net
Internet: www.jumousa.com

Order details

	(1)	**Basic type**
706530		Paperless recorder with the following interfaces: 1x Ethernet, 2x USB (1x host, 1x device), 1x RS232/485 interface, as well as a relay (changeover contact)
	(2)	**Basic type extension**
0		Without software package
1		With software package (setup program incl. USB cable, PC Evaluation Software PCA3000, PCA Communication Software PCC; in conjunction with extra code "888" as well with PC Security Manager PCS and PC Audit Trail Manager PCAT software)
	(3)	**Language**
8		Default setting (German/English)
9		Set according to customer specifications
	(4)	**Option 1 (slot 1)**[a]
0		Not used
1		Analog/digital: 3 analog and 6 digital inputs, 1 analog output
2		Analog(HI)/digital: 3 analog (HI)[b] and 4 digital inputs, 4 digital inputs/outputs
3		Analog: 6 analog inputs
	(5)	**Option 2 (slot 2)**[a]
0		Not used
1		Analog/digital: 3 analog and 6 digital inputs, 1 analog output
2		Analog(HI)/digital: 3 analog (HI)[b] and 4 digital inputs, 4 digital inputs/outputs (individually switchable)
3		Analog: 6 analog inputs
	(6)	**Option 3 (slot 3)**[a]
0		Not used
1		Analog/digital: 3 analog and 6 digital inputs, 1 analog output
2		Analog(HI)/digital: 3 analog (HI)[b] and 4 digital inputs, 4 digital inputs/outputs (individually switchable)
3		Analog: 6 analog inputs
	(7)	**Option 4 (slot 4)**[a]
0		Not used
4		Digital: 12 digital inputs/outputs (individually switchable)
5		Relay: 6 relay outputs (changeover contact)
	(8)	**Voltage supply**
23		AC 110 to 240 V +10/-15 %, 48 to 63 Hz
25		AC/DC 20 to 30 V, 48 to 63 Hz
	(9)	**Extra code 1**
.		Not used
260		Math and logic module (20 channels each)
221		Structured text (ST code)
	(10)	**Extra code 2**
.		Not used
887		Manipulation detection with digital certificate
888		FDA 21 CFR Part 11 with digital certificate
	(11)	**Extra code 3**
.		Not used
163		PROFINET IO device interface (incl. Ethernet)
879		AMS2750/CQI-9[c]
	(12)	**Extra code, housing**
.		Not used
970		Universal carrying case, compact[d]

[a] Subsequent expansion is only possible in JUMO Central Services.
[b] Analog inputs with increased electric strength (AC 300 V).

JUMO GmbH & Co. KG
Delivery address: Mackenrodtstraße 14
36039 Fulda, Germany
Postal address: 36035 Fulda, Germany
Phone: +49 661 6003-0
Fax: +49 661 6003-607
Email: mail@jumo.net
Internet: www.jumo.net

JUMO Instrument Co. Ltd.
JUMO House
Temple Bank, Riverway
Harlow, Essex, CM20 2DY, UK
Phone: +44 1279 63 55 33
Fax: +44 1279 62 50 29
Email: sales@jumo.co.uk
Internet: www.jumo.co.uk

JUMO Process Control, Inc.
6733 Myers Road
East Syracuse, NY 13057, USA
Phone: +1 315 437 5866
Fax: +1 315 437 5860
Email: info.us@jumo.net
Internet: www.jumousa.com

[c] For the calibration certificate it is necessary to state the channels along with the thermocouple type and the desired measuring points. The device is to be used as a permanently installed field device. Use as a mobile field test device for SAT and TUS testing is not permitted.

[d] The extra code is only available in conjunction with voltage supply AC 110 to 240 V. The UL approval does not apply. Use only for personnel with technical qualifications who have been specially trained, and have the relevant knowledge in the field of automation technology! Specifications for ambient temperature and for protection type are to be observed (see technical data)!

	(1)		(2)	(3)		(4)	(5)	(6)	(7)		(8)		(9)[a]		(10)		(11)[a]		(12)
Order code		/			-					-		/		,		,		,	
Order example	706530	/	1	8	-	1	2	3	4	-	23	/	260	,	887	,	163	,	970

[a] Multiple selection at positions 9 and 11 is possible. Specify extra codes one after the other, and separate them with commas.

Scope of delivery

1 paperless recorder in the ordered version
1 quick start guide (brief instructions)
4 mounting elements

Accessories

Description	Part no.
Setup program	00645110
USB cable, A connector to Micro-B connector, length 3 m	00616250
PC Evaluation Software PCA3000	00431882
PCA communication software PCC	00431879
PC software package consisting of: setup program, PC Evaluation Software PCA3000, PCA Communication Software PCC, PC Security Manager PCS, PC Audit Trail Manager PCAT. Please specify all version numbers when placing follow-up orders.	00666817
USB flash drive, 2 GB[a]	00505592
Activation for math and logic module (setup program required)	00716354
Activation for structured text (ST code; setup program required)	00716357
Activation, automatic printout (PCA3000)	00505548
TP-Link TL-WR710N (Wi-Fi router)	00658592
Sealable terminal cover	00712239
Relay (N/O contact) AC 230 V / 3 A for DIN rail	00515872

[a] The indicated USB flash drive has been tested and is designed for industrial applications. Other brands with larger storage capacity can also be used, but no liability is assumed for this.

JUMO GmbH & Co. KG
Delivery address: Mackenrodtstraße 14
36039 Fulda, Germany
Postal address: 36035 Fulda, Germany
Phone: +49 661 6003-0
Fax: +49 661 6003-607
Email: mail@jumo.net
Internet: www.jumo.net

JUMO Instrument Co. Ltd.
JUMO House
Temple Bank, Riverway
Harlow, Essex, CM20 2DY, UK
Phone: +44 1279 63 55 33
Fax: +44 1279 62 50 29
Email: sales@jumo.co.uk
Internet: www.jumo.co.uk

JUMO Process Control, Inc.
6733 Myers Road
East Syracuse, NY 13057, USA
Phone: +1 315 437 5866
Fax: +1 315 437 5860
Email: info.us@jumo.net
Internet: www.jumousa.com

JUMO dTRANS T01 HART® / T01T HART® / T01 Junior / T01 Ex / T01 HART® Ex Programmable 2-wire transmitter

for connection to RTD temperature probes and thermocouples
for installation in : terminal head Form B to DIN 43729
for mounting on : rail

Type 707011/... (HART®), Type 707015/... (Ex), Type 707016/... (HART® Ex)

Type 707014/... (Junior)

Type 707013/... (HART®)

Brief description

The 2-wire transmitter detects the temperature by means of an RTD temperature probe or a thermocouple. For RTD temperature probes, the probe can be connected in a 2-wire circuit, 3-wire circuit, or 4-wire circuit. The probe type, connection type, and measuring range can be configured using a setup program. The output signal 4 to 20 mA or reversed 20 to 4 mA is available in a linearized way (temperature linear).
The device is designed for industrial applications and complies with the respective European standards to guarantee electromagnetic compatibility (EMC).
The inexpensive version dTRANS T01 Junior type 707014/... supports a limited selection of RTD temperature probes and thermocouples. This type does not have a customer-specific linearization.
The versions 707015/... and 707016/... are electrical equipment for use in a potentially explosive area.
The transmitters JUMO dTRANS T01 (types 707011/..., 707013/... and 707016/...) can also be programmed using a HART® modem in conjunction with a PC setup program.

System diagrams

Connection examples (Types 707011/... to 707014/...) with power supply unit

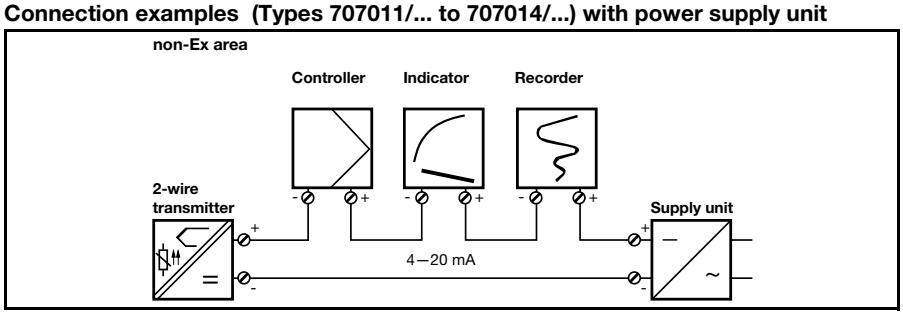

Connection examples (Types 707015/... and 707016/...) for Ex application with Ex supply isolator

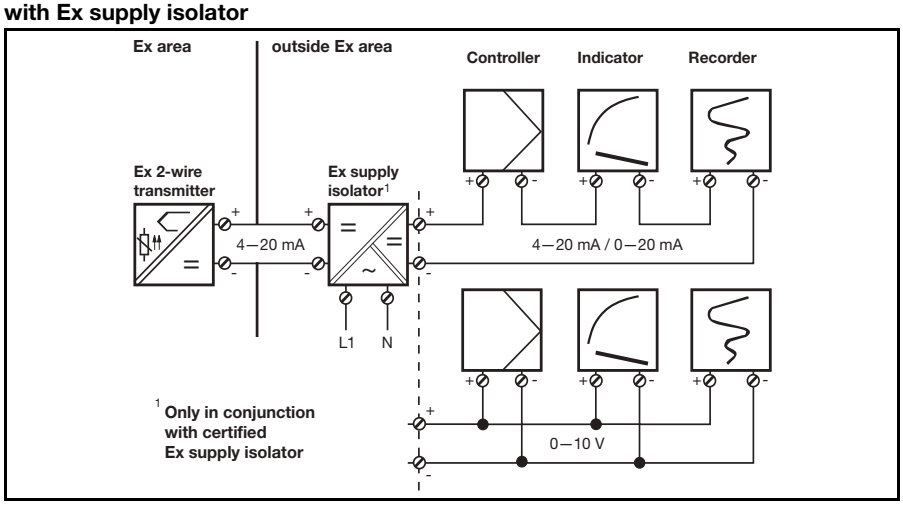

Features

- Types 707011/..., 707013/... and 707016/... with HART® interface
- Type 707015/... Ex and IECEx version
  Ⓔx II 1 G Ex ia IIC T6–T4 Ga
  Ex ia IIC T6...T4 Ga
- Type 707016/... with HART® interface and as Ex version
  Ⓔx II 1 G Ex ia IIC T6/T5/T4
  II 2 G Ex ia IIC T6/T5/T4
- Type 707013/... in rail-mounting housing
- input and output electrically isolated
- freely configurable ranges
- customized linearization for RTD temperature probe and thermocouple (excepting 707014/…)

Technical data

Input for Thermocouple for the types 707011/..., 707013/..., 707015//..., 707016/...

Designation	Range limits	Accuracy[a] (typical)
Fe-CuNi „L“ DIN 43710[c]	-200 … +900°C	typ. 0,5 K
Fe-CuNi „J“ DIN EN 60584	-210 … +1200°C	typ. 0,5 K above -150°C
Cu-CuNi „U“ DIN 43710[c]	-200 … +600°C	typ. 0,5 K
Cu-CuNi „T“ DIN EN 60584[c]	-270 … +400°C	typ. 0,5 K above -200°C
NiCr-Ni „K“ DIN EN 60584	-270 … +1372°C	typ. 0,5 K above -140°C
NiCr-CuNi „E“ DIN EN 60584[c]	-270 … +1000°C	typ. 0,5 K above -150°C
NiCrSi-NiSi „N“ DIN EN 60584[c]	-270 … +1300°C	typ. 1 K above -100°C
Pt10Rh-Pt „S“ DIN EN 60584[c]	-50 … +1768°C	typ. 2 K above 20°C
Pt13Rh-Pt „R“ DIN EN 60584[c]	-50 … +1768°C	typ. 2 K above 50°C
Pt30Rh-Pt6Rh „B“ DIN EN 60584[c]	0 … 1820°C	typ. 2 K above 400°C
MoRe5-MoRe41[b]	0 ... 2000°C	typ. 2 K above 500°C
W3Re-W25Re „D“[c]	0 ... 2495°C	typ. 1 K above 500°C
W5Re-W26Re „C“[c]	0 ... 2320°C	typ. 1 K above 500°C
Shortest span	Type L, J, U, T, K, E, N: 50 K Type S, R, B: 500 K Type MoRe5-MoRe41, D, C: 500 K	
Cold junction	Pt100 internal or external cold junction (adjustable from 0 ... 80 °C)	
Cold junction accuracy	±1 K	
Sampling rate	>1 measurement per second	
Sensor current	350 nA	
Input filter	1st order digital filter; filter constant adjustable: - on Type 707015/... within the range 0 ... 125sec - on Types 707011/..., 707013/... and 707016/... within the range 0 ... 100 sec	
Features	also programmable in °F; freely programmable range limits; input isolated from output	

[a] The accuracy refers to the maximum range span.
[b] Only for type 707015/....
[c] For type 707013/... on request only.

Input RTD temperature probe for the types 707011/..., 707013/..., 707015/..., 707016/...

Designation	Range limits	Range	Accuracy[a]
Pt100 DIN EN 60751	-200 … +850°C	-100 … +200 °C -200 … +850 °C	±0,2 K ±0,4 K
Pt100 JIS	-200 … +649°C	-100 … +200 °C -200 … +649 °C	±0,2 K ±0,4 K
Pt500 DIN	-200 … +250°C	-100 … +200 °C -200 … +250 °C	±0,2K ±0,4 K
Pt1000 DIN	-200 … +250°C	-100 … +200 °C -200 … +250 °C	±0,2 K ±0,4 K
Ni100	-60 … +250°C	-60 … +250 °C	±0,2 K
Ni500	-60 … +150°C	-60 … +150 °C	±0,2 K
Ni1000	-60 … +150°C	-60 … +150 °C	±0,2 K
Connection circuit	2-,3- or 4-wire circuit		
Shortest span	10 K		
Sensor lead resistance - for 3-, 4-wire connection - for 2-wire connection	≤ 11Ω per conductor measuring resistance + ≤22 Ω internal lead resistance		
Sensor current	< 0,6 mA		
Sampling rate	> 1 measurement per second		
Input filter	1st order digital filter; filter constant adjustable: - on type 707015/...within a range 0 … 125s - on types 707011/..., 707013/... and 707016/... within a range 0 … 100s		
Features	also programmable in °F; freely programmable range limits; input isolated from output		

[a] The accuracy refers to the maximum range span.

Input thermocouple for the type 707014/...

Designation			Range limits	Accuracy[a] (typical)
Fe-CuNi	„J“	DIN EN 60584	-210 … +1200 °C	typ. 0,5K above -150 °C
NiCr-Ni	„K“	DIN EN 60584	-270 … +1372 °C	typ. 0,5K above -140 °C
NiCrSi-NiSi	„N“	DIN EN 60584	-270 … +1300 °C	typ. 1K above -100 °C
Pt10Rh-Pt	„S“	DIN EN 60584	-50 … +1768 °C	typ. 2K above 20 °C
Pt13Rh-Pt	„R“	DIN EN 60584	-50 … +1768 °C	typ. 2K above 50 °C
Shortest span			Type J, K, N: 50K Type S, R: 500K	
Cold junction			Pt100 internal or external cold junction (adjustable from 0 ... 80 °C)	
Cold junction accuracy			±1 K	
Sampling rate			>1 measurement per second	
Sensor current			350nA	
Input filter			1st order digital filter; filter constant adjustable: - on type 707014/... within the range 0 … 125s	
Features			also programmable in °F; freely programmable range limits; input isolated from output	

[a] The accuracy refers to the maximum range span.

Input RTD temperature probe for the type 707014/...

Designation		Range limits	Range	Accuracy[a]
Pt100	DIN EN 60751	-200 … +850 °C	-100 … +200 °C -200 … +850 °C	±0,2 K ±0,4 K
Pt100	JIS	-200 … +649 °C	-100 … +200 °C -200 … +649 °C	±0,2 K ±0,4 K
Pt1000	DIN	-200 … +250 °C	-100 … +200 °C -200 … +250 °C	±0,2 K ±0,4 K
Connection circuit		2-,3- or 4-wire circuit		
Shortest span		10K		
Sensor lead resistance - for 3-, 4-wire connection - for 2-wire connection		≤ 11 Ω per conductor measuring resistance + ≤22 Ω internal lead resistance		
Sensor current		< 0,6 mA		
Sampling rate		> 1 measurement per second		
Input filter		1st order digital filter; filter constant adjustable: - on type 707014/... within the range 0 … 125 s		
Features		also programmable in °F; freely programmable range limits; input isolated from output		

[a] The accuracy refers to the maximum range span.

Measurement circuit monitoring

Underrange	linear drop to 3.8 mA (as per NAMUR recommendation 43)
Overrange	linear rise to 20.5 mA (as per NAMUR recommendation 43)
Probe short circuit / probe and lead break	RTD temperature probe: ≤ 3.5 mA or ≥ 21.0 mA (configurable) thermocouple: ≤ 3.5 mA or ≥ 21.0 mA (configurable)[a]
Current limiting on probe short circuit or probe break	≤ 23 mA

[a] Probe short-circuit recognition is not possible for thermocouple.

Output

	Types 707014/..., 707015/...	Types 707011/..., 707013/..., 707016/...
Output signal	proportional DC current 4 ... 20 mA, 20 ... 4 mA	
Electrical isolation Test voltage	between input and output Type 707014/...: U_{peak} = 1.0 kV/50 Hz Type 707015/...: U_{peak} = 3.75 kV/50 Hz	between input and output U = 2.0 kV/50 Hz
Transfer characteristic	linear with temperature	
	Type 707015/...: customized linearization	customized linearization
	reversion of output signal	
Burden (Rb)	Rb = (Ub - 8 V) / 0.022 A	Rb = (Ub - 11.5V) / 0.022A
Burden error	≤ ± 0.02 % / 100 Ω[a]	
Calibration conditions / accuracy	24V DC at approx. 22 °C / ≤ ± 0.05 %[a]	
1st order digital filter	0 — 125 sec configurable	0 — 100 sec configurable
Step response 0 — 100 %	< 2 sec (with filter constant 0 sec)	
Switch-on delay (correct measurement after connecting the supply voltage only after ...)	5 sec	4 sec

[a] All specified values refer to 20 mA full scale.

Custom linearization

Types 707011/..., 707013/..., 707016/... - Number of calibration points - Polynomial	maximum: 40 with linear interpolation 4th order polynomial
Type 707015/... - Number of calibration points	maximum: 40 with linear interpolation
Type 707014/...	No custom linearization available

Supply

Supply voltage (Ub) with reverse polarity protection	Type 707014/...: DC 8 ... 35V Type 707015/...: DC 8 ... 30V	Type 707011/...: DC 11.5 ... 35V Type 707013/...: DC 11.5 ... 35V Type 707016/...: DC 11.5 ... 30V
Supply voltage error	≤ ± 0,01 % per V deviation from 24 V[a]	

[a] All specified values refer to 20 mA full scale.

Environmental influences

Operating temperature range	-40 to +85 °C	
Storage temperature range	-40 to +100 °C	
Temperature error	RTD temperature probe: ≤ ± 0.005 % per °C deviation from 22 °C[a] thermocouple: ≤ ± 0.005 % per °C deviation from 22 °C[a] plus accuracy of cold junction	
Long-term stability	≤ 0.1 °C per year[b] or ≤ 0.05 % per year[b,c]	
Climatic conditions	rel. humidity ≤ 95 %, with condensation	
Vibration strength	according to GL characteristic 2	
Electromagnetic compatibility (EMC) - interference emission - immunity to interference	EN 61326-1 Class B[d] to industrial requirements	
IP protection - in terminal head - open mounting - on rail	 IP54 IP00 –	 Types 707011/... and 707016/...: IP66 Types 707011/... and 707016/...: IP00 Type 707013/...: IP20

[a] All specified values refer to 20 mA full scale
[b] under calibration conditions
[c] % refer to the selected span. The larger value applies.
[d] The product is suitable for industrial use as well as for households and small businesses.

Housing

	Types 707011/..., 707014/..., 707015/..., 707016/...	Type 707013/...
Material	polycarbonate (encapsulated)	polycarbonate
Screw terminal	≤ 1.75 mm²; max. tightening torque 0.6 Nm	≤ 2.5 mm²; max. tightening torque 0.6 Nm
Mounting	in terminal head Form B (DIN EN 50446); in surface-mounting case (on request); in switchgear cabinet (mounting bracket is required)	on DIN rail 35mm x 7.5mm (DIN EN 60715); on DIN rail 15mm (DIN EN 60715); on G rail (DIN EN 60715)
Operating position	unrestricted	
Weight	approx. 40g	approx. 90g

Version 707015/... (Ex) - Extract from the EC Type-Examination Certificate ZELM 99 ATEX 0018X

Marking	Ex II 1 G Ex ia IIC T6–T4 Ga
Temp. range in “II 2 G” and “II 3 G”	T6 = -40 to +55°C / T5 = -40 to +70°C / T4 = -40 to +75°C
Temp. range in “II 1 G”	T6 = -40 to +40°C / T5 = -40 to +50°C / T4 = -40 to +60°C
Supply circuit Max. values at the terminals 1(+) and 2(-) Internal inductance and capacitance	U_i = 30V DC I_i = 100 mA P_i = 750 mW L_i = negligible C_i = negligible
Sensor circuit Max. values at the terminals 3, 4, 5 and 6 Max. permissible external inductance and capacitance Ex ia IIC Ex ia IIB	U_o = 9.6V DC I_o = 4.5 mA P_o = 11 mW linear output characteristic L_o = 4.5 mH / C_o = 709 nF L_o = 8.5 mH / C_o = 1300 nF

Version 707016/... (Ex) - Extract from the EC Type-Examination Certificate PTB 01 ATEX 2124

Marking	Ex II 1 G Ex ia IIC T6/T5/T4 II 2 G Ex ia IIC T6/T5/T4
Temp. range in “II 2 G” and “II 3 G”	T6 = -40 to +55 °C / T5 = -40 to +70 °C / T4 = -40 to +85 °C
Temp. range in “II 1 G”	T6 = -20 to +40 °C / T5 = -20 to +50 °C / T4 = -20 to +60 °C
Supply circuit Max. value at the terminals 1(+) and 2(-) Internal inductance and capacitance	U_i = 30 VDC I_i = 100 mA P_i = 750 mW L_i = negligible C_i = negligible
Sensor circuit Max. values at the terminals 3, 4, 5 and 6 Internal inductance and capacitance Connected circuit **without** lumped external inductance or capacitance Connected circuit **with** lumped external inductance or capacitance Ex ia IIC Ex ia IIB, Ex ia IIA	U_o = 5 V DC I_o = 5.4 mA P_o = 6.6 mW linear characteristic L_i = negligible C_i = negligible L_o = 1000 mH C_o = 100 µF L_o = 100 mH / C_o = 2 µF L_o = 100 mH / C_o = 9.9 µF

Approvals/marks of conformity

Mark of conformity	Testing laboratory	Certificates/ certification numbers	Test basis	valid for
II 1 G Ex ia IIC T6-T4 Ga	ZELM Ex	ZELM 99 ATEX 0018 X	EN 60079-0:2012 + A11:2013 EN 60079-11:2012 EN 60079-26:2007 EN 1127-1:2011	Type 707015/...
Ex ia IIC T6...T4 Ga	Primara	IECEx ZLM 14.0011X	IEC 60079-0:2011 (ed. 6) IEC 60079-11:2011 (ed. 6) IEC 60079-26:2006 (ed. 2)	Type 707015/...
II 1 G Ex ia IIC T6/T5/T4 II 2 G Ex ia IIC T6/T5/T4	PTB	PTB 01 ATEX 2124	EN 60079-0:2012 + A11:2013 EN 60079-11:2012 EN 60079-26:2015	Type 707016/...

Setup program

The setup program is available for configuring the transmitter from a PC. With Types 707014/... and 707015/... , the connection is via the PC interface with a an USB/TTL converter and the setup interface of the transmitter, in the case of Types 707011/..., 707013/... and 707016/..., via a HART® modem. The connection for the setup circuit must only be used outside the hazardous area. It is not permissible to configure the transmitter inside the Ex area.
The protective cover must be closed after programming type 707015/... .

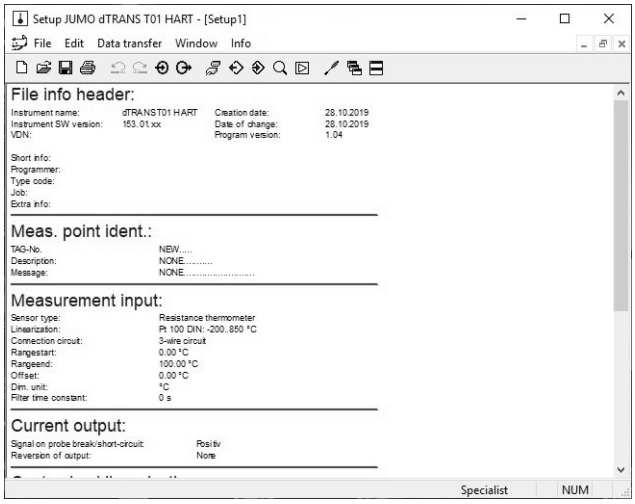

Configurable parameters

TAG number (10 characters) on Types 707011/..., 707013/... and 707016/..., 8 characters only, but with additional 16-character description	Sensor type
Connection circuit (2-/3-/4-wire)	External and internal cold junction
Customized linearization (not for type 707014/...)	Range limits
Output signal rising/falling (reversion)	Digital filter
Response to probe break/short circuit	Recalibration/fine calibration (not for Types 707011/..., 707013/... and 707016/...)
Lead resistance with 2-wire circuit	

If no power supply (supply isolator) is available, the 2-wire transmitter Type 707014/... or 707015/... has to be configured using a 9V block battery as a power source.

Fine calibration (not on Types 707011/..., 707013/... and 707016/...)

Fine calibration means correction of the output signal. The signal can be adjusted within ± 5 % of the 20 mA full-scale value. Fine calibration is performed through the setup program. Values for 4 mA (zero), 20 mA (full scale) and offset can be calibrated separately, via the setup program.

Hardware and software requirements

A PC with a serial interface or USB interface (e.g. HART® modem) is required to install and use the setup program.
Details about supported operating systems (Microsoft® Windows®), required hard disk drives, and memory can be found under information about the setup program on the manufacturer's website.

Setup interface (Types 707014/... and 707015/...)

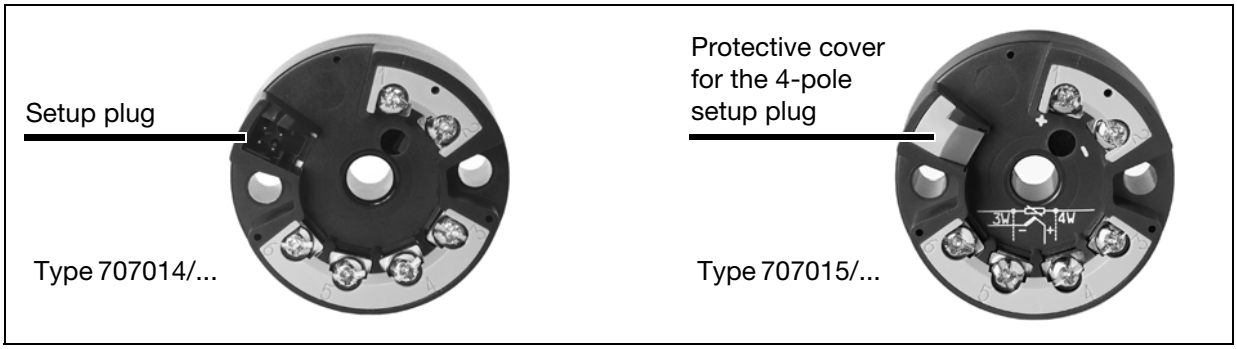

HART® interface (Type 707011/... and 707013/...)

Connection via HART® modem

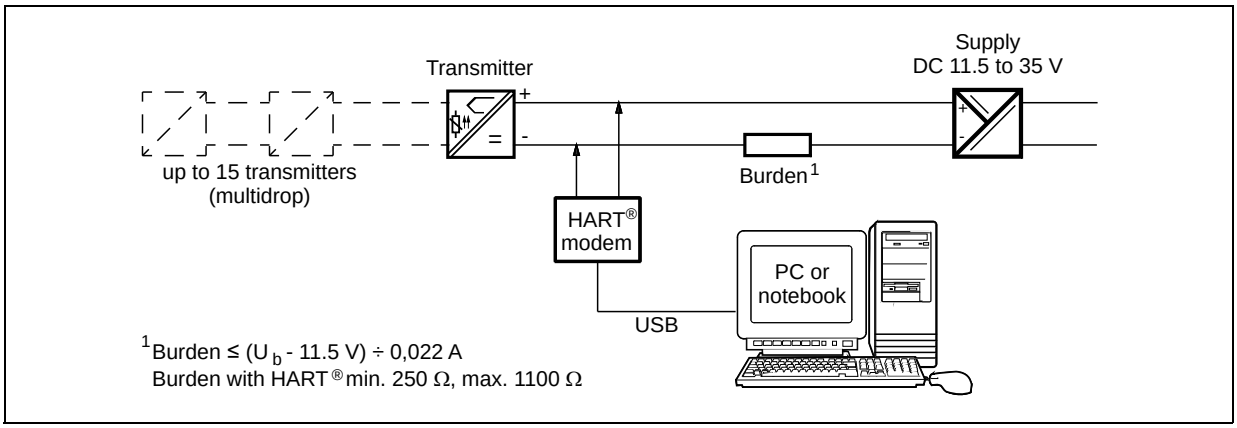

HART® interface (Type 707016/...)

Connection via HART® modem for Ex application

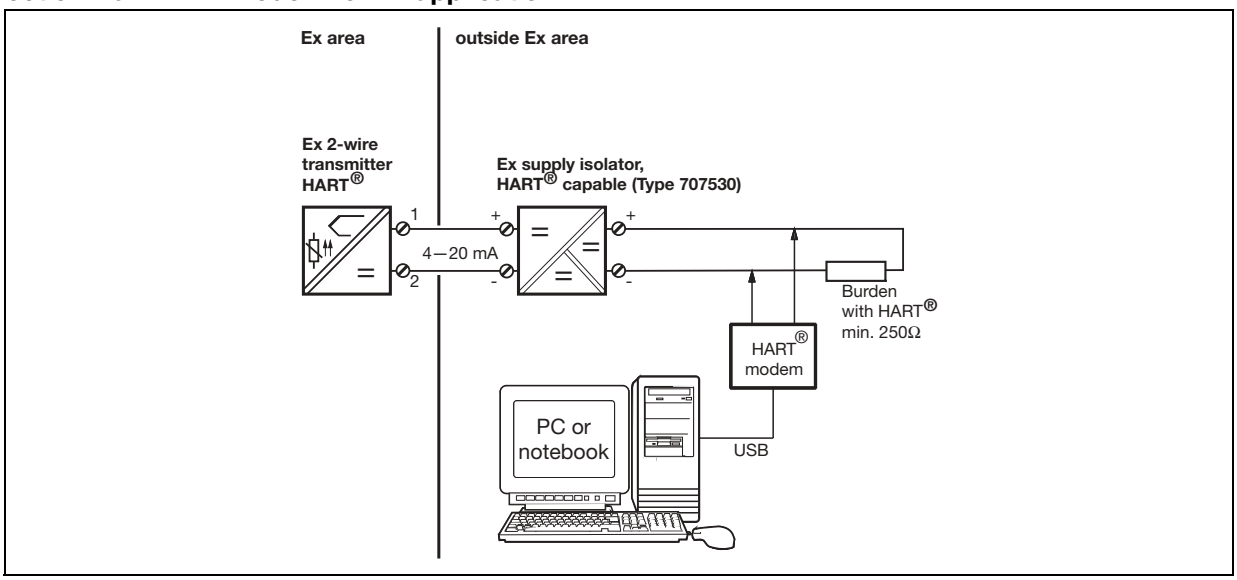

Connection diagram

Setup

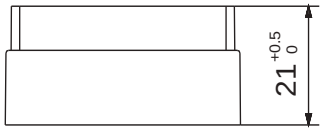

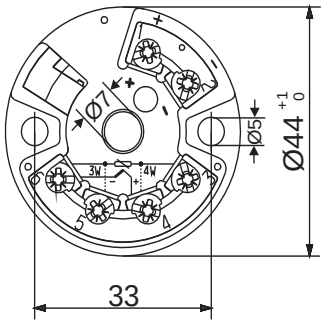

Type 707011/..., Type 707015/..., Type 707016/...

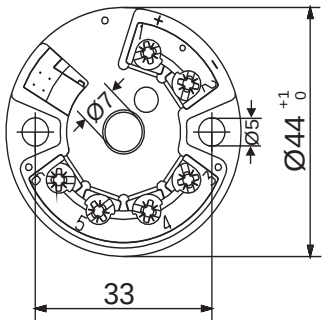

Type 707014/...

Connection for		Terminals	
	Supply voltage for Type 707011/... 11.5 ... 35V DC	+1 $R_B = \frac{U_b - 11.5V}{22mA}$	
	Supply voltage for Type 707014/... 8 ... 35V DC	-2 $R_B = \frac{U_b - 8V}{22mA}$	
	Supply voltage for Type 707015/... 8 ... 30V DC (Ex)[a]	$R_B = \frac{U_b - 8V}{22mA}$	1 2 + −
	Supply voltage for Type 707016/... 11.5 ... 30V DC (Ex)[a]	$R_B = \frac{U_b - 11.5V}{22mA}$	
	Current output 4 — 20 mA	R_B = burden resistance U_b = supply voltage	
	Ex version only in conjunction with certified Ex transmitter supply unit		
Analog inputs			
	Thermocouple	+4 -6	4 6 + −
	RTD temperature probe in 2-wire circuit	3 6 $R_L \leq 11\ \Omega$ R_L = lead resistance per conductor	3 6 ϑ
	RTD temperature probe in 3-wire circuit	3 5 6 $R_L \leq 11\ \Omega$ R_L = lead resistance per conductor	3 5 6 ϑ
	RTD temperature probe in 4-wire circuit	3 4 5 6 $R_L \leq 11\ \Omega$ R_L = lead resistance per conductor	3 4 5 6 ϑ
	Ex version: please note connection data of the Ex input circuit!		

[a] On types 707015/... and 707016/... only up to 30V. The connection must only be made to an intrinsically safe circuit.

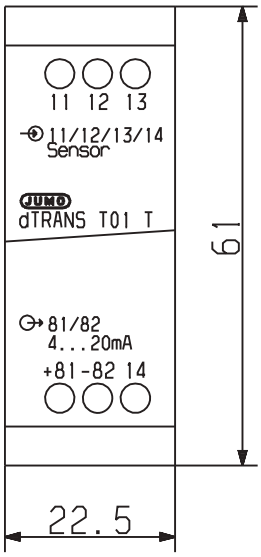

Depth behind panel 98 max.

Connection for		Terminals	
	Supply voltage for Type 707013/... 11.5 — 35 V DC	+81 $R_B = \frac{U_b - 11.5V}{22mA}$ -82	81 82 + −
	Current output 4 — 20 mA	R_B = burden resistance U_b = supply voltage	
Analog inputs			
	Thermocouple (special feature: see order details)	+11 -12	11 12 + −
	RTD temperature probe in 2-wire circuit	11 13 $R_L \leq 11\ \Omega$ R_L = lead resistance per conductor	11 13 ϑ
	RTD temperature probe in 3-wire circuit	11 12 13 $R_L \leq 11\ \Omega$ R_L = lead resistance per conductor	11 12 13 ϑ
	RTD temperature probe in 4-wire circuit	11 12 13 14 $R_L \leq 11\ \Omega$ R_L = lead resistance per conductor	11 14 12 13 ϑ

Caution: the order details on P. 9 must be observed

Order details: JUMO dTRANS T01 / T01T

Programmable 2-wire transmitter

						(1)	**Basic type**
					707011		dTRANS T01 B HART® programmable 2-wire transmitter with HART® interface
					707013		dTRANS T01 T HART programmable 2-wire transmitter with HART interface installed in rail mounting housing[a] (Caution: observe the footnotes)
					707014		dTRANS T01 Junior
					707015		dTRANS T01 B Ex programmable 2-wire transmitter with Ex protection
					707016		dTRANS T01 B Ex HART® programmable 2-wire transmitter with HART® interface and Ex protection
						(2)	**Input (programmable)**
x	x	x	x	x	888		factory-set (Pt100 DIN 4w / 0 ... 100 °C)
x	x	x	x	x	999		configuration to customer specification[b]
						(3)	**Output (proportional DC current)**
x	x	x	x	x	888		factory-set (4 — 20 mA)
x	x	x	x	x	999		configuration to customer specification (20 ... 4 mA)
						(4)	**Probe break/ short circuit**
x	x	x	x	x	888		factory-set (positive protection)
x	x	x	x	x	999		configuration to customer specification (negative protection)
						(5)	**Extra codes**
x	x	x	x	x	000		none
x					243		transmitter in surface-mounting case

	(1)		(2)		(3)		(4)		(5)
Order code	[ ]	/	[ ]	-	[ ]	-	[ ]	/	[ ]
Order example	707010	/	888	-	888	-	888	/	243

[a] When ordering, please specify the type of sensor required (thermocouple or RTD temperature probe). For thermocouple inputs, the sensor input cannot be changed retrospectively, because of the internal compensating cable. For RTD temperature probe inputs, all types of RTD temperature probes listed on P. 2 can be connected, but no thermocouples. Thermocouple inputs are available on request.

[b] Probe type and range have to be specified in plain text for configuration to customer specification.

Standard accessories

- 1 Operating Instructions
- Fixing items: 2 fastening screws, 2 compression springs, and 2 locking washers (not for Type 707013/...)

Accessories

- PC setup program, multilingual
- PC interface with USB/TTL converter, adapter (socket) and adapter (pins) for Types 707014/... and 707015/...
- Bracket for mounting on DIN rail, part no. 00352463
- HART® modem USB (for Types 707011/..., 707013/... and 707016/...), part no. 00443447
- Power supply units 1- and 4-way (Data Sheet 707500)
- Ex-i power supply/input isolating amplifier (Data Sheet 707530), part no. 00577948

JUMO GmbH & Co. KG
Delivery address: Mackenrodtstraße 14
36039 Fulda, Germany
Postal address: 36035 Fulda, Germany
Phone: +49 661 6003-0
Fax: +49 661 6003-607
E-mail: mail@jumo.net
Internet: www.jumo.net

JUMO Instrument Co. Ltd.
JUMO House
Temple Bank, Riverway
Harlow, Essex CM20 2DY, UK
Phone: +44 1279 635533
Fax: +44 1279 635262
E-mail: sales@jumo.co.uk
Internet: www.jumo.co.uk

JUMO Process Control, Inc.
6733 Myers Road
East Syracuse, NY 13057, USA
Phone: 315-437-5866
1-800-554-5866
Fax: 315-437-5860
E-mail: info.us@jumo.net
Internet: www.jumousa.com

JUMO dTRANS T02 Programmable 4-wire Transmitter (Smart Transmitter)

with isolation of the standard signal for mounting on DIN rail 35mm x 7.5mm to EN 60715

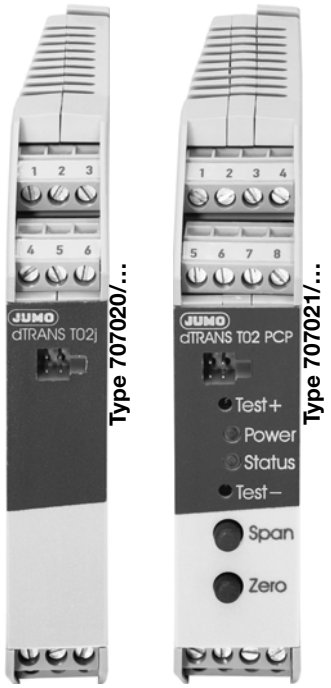

Brief description

The JUMO dTRANS T02 transmitters incorporate a microprocessor for digital signal processing. Input and output are electrically isolated. They can be mounted on a DIN rail, the electrical connection is by screw terminals for stranded or solid wire up to 2.5mm² conductor cross-section.
Depending on the type, the 0/4 — 20mA or 0/2 — 10V output signal is available either linearized (linear with temperature) or inverted (option). The transmitters can be programmed via the PC setup program, which is supplied as an accessory (sensor type, range, output action, fine calibration, custom linearization).
On types 707021/... and 707022/... it is possible to additionally program the limits of the limit comparators, and the frequency output.
Current and voltage outputs are available directly on terminals. No hardware alterations are required.

Overview of function

	dTRANS T02j (junior) Type 707020/...	dTRANS T02 PCP Type 707021/...	dTRANS T02 LCD Type 707022/...	dTRANS T02 EX Type 707025/...
Housing width	17.5mm	22.5mm	22.5mm	22.5mm
Display	none	2 LEDs	2 LEDs and LCD display	2 LEDs
Keys	none	2 keys	3 keys	2 keys
Supply	24V DC	20 — 53V AC/DC 110 — 240V AC	20 — 53V AC/DC 110 — 240V AC	230V AC 20 — 53V AC/DC
Inputs	thermocouple, resistance thermometer (restricted), potentiometer, voltage (≤100mV), current with ext. shunt	thermocouple, resistance thermometer, resistance transmitter, potentiometer, voltage (up to ±10V), current (up to ±20mA)	thermocouple, resistance thermometer, resistance transmitter, potentiometer, voltage (up to ±10V), current (up to ±20mA)	thermocouple, resistance thermometer, resistance transmitter, potentiometer, voltage (up to ±10V), current (up to ±20mA)
Outputs	0/4 — 20mA, 0 — 10V	0/4 — 20mA, 0/2 — 10V, 2 open-collector	0/4 — 20mA, 0/2 — 10V, 2 open-collector	0/4 — 20mA, 0/2 — 10V
Internal	linearization, customized linearization	linearization, customized linearization, 2 limit comparators or 1 limit comparator and 1 frequency output	linearization, customized linearization, 2 limit comparators or 1 limit comparator and 1 frequency output	linearization, customized linearization 2 limit comparators (indication only via the power and status LEDs)
Operation	fine calibration via setup program	fine calibration and limits via instrument keys and setup program	fine calibration and limits via instrument keys and setup program	fine calibration via instrument keys and setup program

Technical data for type 707020

Input for thermocouple

Designation				Range limits	Range	Accuracy[a]
Fe-Con	L	DIN	43710	-200 to +900°C	-200 to +900°C	0.25%
Fe-Con	J	EN	60584	-210 to +1200°C	-200 to +1200°C	0.25%
Cu-Con	U	DIN	43710	-200 to +600°C	-200 to +600°C	0.25%
Cu-Con	T	EN	60584	-270 to +400°C	-200 to +400°C	0.25%
NiCr-Ni	K	EN	60584	-270 to +1372°C	-150 to +1372°C	0.25%
NiCr-Con	E	EN	60584	-270 to +1000°C	-200 to +1000°C	0.25%
NiCrSi-NiSi	N	EN	60584	-270 to +1300°C	-100 to +1300°C	0.25%
Pt10Rh-Pt	S	EN	60584	-50 to +1768°C	-50 to +1768°C	0.25%
Pt13Rh-Pt	R	EN	60584	-50 to +1768°C	-50 to +1768°C	0.25%
Pt30Rh-Pt6Rh	B	EN	60584	0 — 1820°C	400 — 1820°C	0.25%
MoRe5-MoRe41				0 — 2000°C	500 — 2000°C	0.25%
W3Re-W25Re	D			0 — 2495°C	500 — 2495°C	0.25%
W5Re-W26Re	C			0 — 2320°C	500 — 2320°C	0.25%
Shortest span				Type L, J, U, T, K, E, N: 50°C Type S, R, B: 500°C Type MoRe5-MoRe41: 500°C Type D, C: 500°C		
Range start/end				freely programmable range limits		
Cold junction				Pt100 internal or external cold junction (0 — 80°C is adjustable)		
Cold junction accuracy				± 1°C		
Sampling rate				> 1 measurement per second		
Input filter				1st order digital filter; filter constant adjustable from 0 to 125sec		
Special features				also programmable in °F; input isolated from output		

[a] The accuracy refers to the maximum range span.
For small ranges, as well as for short spans, the linearization accuracy is reduced.

Input for resistance thermometer

Designation		Range limits	Range	Accuracy
Pt 100	EN 60751	-200 to +850°C	-100 to +200°C -200 to +850°C	±0.4°C ±0.8°C
Pt 100	JIS	-200 to +649°C	-100 to +200°C -200 to +649°C	±0.4°C ±0.8°C
Pt 500	DIN	-200 to +250°C	-100 to +200°C -200 to +250°C	±0.4°C ±0.8°C
Pt 1000	DIN	-200 to +250°C	-100 to +200°C -200 to +250°C	±0.4°C ±0.8°C
Ni 100		-60 to +180°C	-60 to +180°C	±0.8°C
Ni 500, Ni 1000		-60 to +150°C	-60 to +150°C	±0.8°C
Connection circuit		2-, 3- or 4-wire		
Shortest span		20°C		
Range start/end		freely programmable range limits		
Sensor lead resistance - for 3-, 4-wire connection - for 2-wire connection		≤ 11Ω per conductor meas. resistance + ≤22Ω internal lead resistance		
Sensor current		< 0.6mA		
Sampling rate		> 1 measurement per second		
Input filter		1st order digital filter; filter constant adjustable from 0 to 125sec		
Special features		also programmable in °F; input isolated from output		

Input for potentiometer

Range	Accuracy
up to 400Ω up to 2000Ω	±500mΩ ±1Ω
Connection circuit	2-, 3- or 4-wire circuit
Shortest span	6Ω
Resistance values	freely programmable within the limits in 0.1Ω steps
Sensor lead resistance - for 3-, 4-wire connection - for 2-wire connection	 ≤ 11Ω per conductor meas. resistance + ≤22Ω internal lead resistance
Sampling rate	> 1 measurement per second
Input filter	1st order digital filter; filter constant adjustable from 0 to 125sec
Special features	also programmable in °F; input isolated from output

Input for DC voltage, DC current

Range	Accuracy	Input resistance
0 — 100mV	±150µV	R_{IN} > 10 MΩ
Shortest span	5mV	
Range start/end	freely programmable within the limits (up to 999mV in 0.1mV steps, above 1V in 1mV steps)	
Sampling rate	> 1 measurement per second	
Input filter	1st order digital filter; filter constant adjustable from 0 to 125sec	
Current input	The current input can only be implemented in conjunction with an external shunt (not included in delivery). Example: a 5Ω shunt results in 0 — 20mA current input, with a programmed voltage range of 0 — 100mV. The accuracy corresponds to the voltage input plus the inaccuracy of the shunt.	

Measurement circuit monitoring

	Resistance thermometer	Thermocouple
Underrange	linear drop to 3.8mA or 0mA (as per NAMUR recommendation 43)	
Overrange	linear rise to 20.5mA (as per NAMUR recommendation 43)	
Probe short-circuit / Probe/lead break	0mA or ≥ 21.0mA (configurable)	0mA or ≥ 21.0mA (configurable)[a]

[a] Probe short-circuit recognition is not possible for thermocouple.

Analog outputs

	Current output
Output signal	proportional DC current 0 — 20mA or 4 — 20mA programmable
Transfer characteristic	linear with temperature
	inversion of the output signal
Max. burden	750Ω
Burden error	≤ ± 0.02% / 100Ω
1st order digital filter	0 — 125sec configurable
Step response 0 — 100 %	< 2sec (with filter constant 0sec)
Switch-on delay	5sec (correct measurement after connecting the supply voltage)
	Voltage output
Output range	0 — 10V
Accuracy	± 5mV
Linearity error	± 2mV
Load resistance	≥ 2kΩ
Load error	± 15mV
Ripple	± 1% referred to 10V, 0 — 90kHz

Custom linearization

Number of calibration points	40 max.
Interpolation	linear

Electrical data

Supply voltage	24V DC +10%/-15%
Power consumption	1W
Supply voltage error	≤ ± 0.01% per V deviation from 24V
Test voltage	to DIN 61010, Part 1 510V/50Hz, 1min
Isolation - between input and output - between input and mains supply - between output and mains supply - between input and setup plug	 50V 50V 50V no isolation between input and setup plug

Technical data type 707021/..., type 707022/... and type 707025/...

Input for thermocouple

Designation				Range limits	Range	Accuracy[a]
Fe-Con	L	DIN	43710	-200 to +900°C	-200 to +900°C	0.1% above -150°C
Fe-Con	J	EN	60584	-210 to +1200°C	-200 to +1200°C	0.1% above -100°C
Cu-Con	U	DIN	43710	-200 to +600°C	-200 to +600°C	0.1% above -100°C
Cu-Con	T	EN	60584	-270 to +400°C	-200 to +400°C	0.1% above -100°C
NiCr-Ni	K	EN	60584	-270 to +1372°C	-200 to +1372°C	0.1% above -60°C
NiCr-Con	E	EN	60584	-270 to +1000°C	-200 to +1000°C	0.1% above -60°C
NiCrSi-NiSi	N	EN	60584	-270 to +1300°C	-100 to +1300°C	0.1% above -80°C
Pt10Rh-Pt	S	EN	60584	-50 to +1768°C	-50 to +1768°C	0.15% above 0°C
Pt13Rh-Pt	R	EN	60584	-50 to +1768°C	-50 to +1768°C	0.15% above 0°C
Pt30Rh-Pt6Rh	B	EN	60584	0 — 1820°C	400 — 1820°C	0.15% above 400°C
W3Re-W25Re	D			0 — 2495°C	500 — 2495°C	0.15% above 500°C
W5Re-W26Re	C			0 — 2320°C	500 — 2320°C	0.15% above 500°C
Shortest span				Type L, J, U, T, K, E, N: 100°C; type S, R, B, D, C: 500°C		
Range start/end				freely programmable within the limits in 0.1°C steps		
Cold junction				Pt100 internal or external cold junction (adjustable from 0 to 100°C)		
Cold junction accuracy				± 1°C		
Sampling rate				≤ 100msec		
Special features				also programmable in °F; input isolated from output		

[a] The accuracy refers to the maximum range span.
For small ranges, as well as for short spans, the linearization accuracy is reduced.

Input for resistance thermometer

Designation		Connection circuit	Range limits	Range	Accuracy
Pt 100	EN 60751	2/3-wire 2/3-wire 4-wire 4-wire	-200 to +850°C	-100 to +200°C -200 to +850°C -100 to +200°C -200 to +850°C	±0.4°C ±0.8°C ±0.4°C ±0.5°C
Pt 100	JIS	2/3-wire 2/3-wire 4-wire 4-wire	-200 to +649°C	-100 to +200°C -200 to +649°C -100 to +200°C -200 to +649°C	±0.4°C ±0.8°C ±0.4°C ±0.5°C
Pt 500	DIN	2/3-wire 2/3-wire 4-wire 4-wire	-200 to +850°C	-100 to +200°C -200 to +850°C -100 to +200°C -200 to +850°C	±0.4°C ±0.8°C ±0.4°C ±0.5°C
Pt 1000	DIN	2/3-wire 2/3-wire 4-wire 4-wire	-200 to +850°C	-100 to +200°C -200 to +850°C -100 to +200°C -200 to +850°C	±0.4°C ±0.8°C ±0.4°C ±0.5°C
Ni 100		2/3-wire 4-wire	-60 to +180°C	-60 to +180°C -60 to +180°C	±0.8°C ±0.5°C

Designation	Connection circuit	Range limits	Range	Accuracy
Ni 500, Ni 1000	2/3-wire 4-wire	-60 to +150°C	-60 to +150°C -60 to +150°C	±0.8°C ±0.5°C
Connection circuit	2-, 3- or 4-wire circuit			
Shortest span	15°C			
Range start/end	freely programmable within the limits in 0.1°C steps			
Sensor lead resistance	≤ 30Ω per conductor (for 3- and 4-wire circuit) ≤ 15Ω per conductor (for 2-wire circuit)			
Sensor current	< 0.6mA			
Sampling rate	≤ 100msec			
Input filter	2nd order digital filter; filter constant adjustable from 0 to 20.0sec			

Input for resistance transmitter and potentiometer

Range	Accuracy
up to 200Ω up to 400Ω up to 800Ω up to 2000Ω up to 3900Ω	±300mΩ ±600mΩ ±1Ω ±2Ω ±3Ω
Connection circuit	resistance transmitter: 3-wire potentiometer: 2-, 3- or 4-wire
Shortest span	6Ω
Resistance values	freely programmable within the limits in 0.1Ω steps
Sensor lead resistance	≤ 30Ω per conductor for 4-wire circuit ≤ 15Ω per conductor for 2- and 3-wire circuit up to 200Ω range: ≤ 10Ω per conductor for 2- and 3-wire circuit
Sampling rate	≤ 100msec
Input filter	2nd order digital filter; filter constant adjustable from 0 to 20.0sec

Input for DC voltage, DC current

Range	Accuracy	Input resistance
-25 to +75mV	±100µV	R_{IN} > 10 MΩ
0 to 100mV	±100µV	R_{IN} > 10 MΩ
-100 to +100mV	±150µV	R_{IN} > 10 MΩ
0 to 200mV	±150µV	R_{IN} > 10 MΩ
-500 to +500mV	±1mV	R_{IN} > 10 MΩ
0 to 1V	±1mV	R_{IN} > 10 MΩ
-1 to +1V	±2mV	R_{IN} > 10 MΩ
-5 to +5V	±10mV	R_{IN} > 0.5 MΩ
0 to 10V	±10mV	R_{IN} > 0.5 MΩ
-10 to +10V	±15mV	R_{IN} > 0.5 MΩ
Shortest span	5mV	
Range start/end	freely programmable within the limits (up to 999mV in 0.1mV steps, above 1V in 1mV steps)	
4 to 20mA 0 to 20mA -20 to +20mA	±20µA ±20µA ±40µA	burden voltage ≤ 2.6V burden voltage ≤ 2.6V burden voltage ≤ 2.6V
Shortest span	0.5mA	
Range start/end	freely programmable within the limits in 0.1mA steps	
Sampling rate	≤ 100msec	
Input filter	2nd order digital filter; filter constant adjustable from 0 to 20.0sec	

Analog outputs

	Current output
Output range	proportional DC current 0 — 20mA or 4 — 20mA programmable
Accuracy	± 0.015mA
Linearity error	± 0.005mA
Max. burden	750Ω
Burden error	± 0.01mA
Ripple	± 1% referred to 20mA, 0 — 90kHz; above 90kHz: tested to EN 50081
Output current on probe break, over/underrange	0mA or 22mA (programmable)
	Voltage output
Output range	0 — 10V or 2 — 10V
Accuracy	± 5mV
Linearity error	± 2mV
Load resistance	≥ 2kΩ
Burden error	± 15mV
Ripple	± 1% referred to 10V, 0 — 90kHz
Output voltage on probe break, over/underrange	0V or 11V (programmable)

Digital outputs (only for types 707021/... and 707022/...)

2 open-collector outputs	
Output 1	lk7 or lk8 or fault output
Output 2	lk7 or lk8 or frequency output
Function lk7	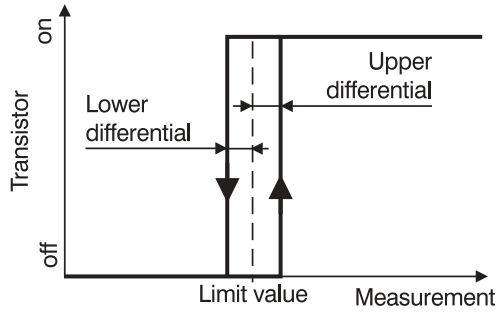
Function lk8	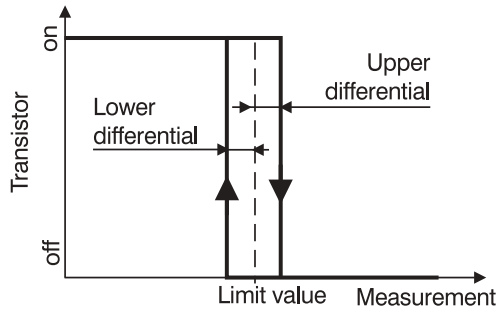
Switching capacity of open-collector	35V, 100mA
Voltage drop	in switched condition ≤ 1.2V
Short-circuit strength	not available
Frequency output	
Function	the frequency output produces the latest measurement as a frequency; the frequency at range start/end is programmable
Smallest/highest frequency	10Hz / 1000Hz
Error output	
Activation	due to probe break, over/underrange and internal errors (Pt100 of cold junction faulty, EEPROM does not respond)

Customized linearization

Interpolation: linear	max. 41 calibration points
Interpolation: square-law	max. 53 calibration points
Interpolation: cube-law	max. 61 calibration points
Input of calibration points	through setup program (accessory)

Electrical data

Supply voltage - types 707021/... and 707022/... - type 707025/...	 20 — 53V AC/DC, 48 — 63Hz or 110 — 240V AC +10/-15%, 48 — 63Hz 230V AC ±10%, 48 — 63Hz or 20 — 53V AC/DC, 48 — 63Hz
Power consumption	max. 5VA
Test voltage - between input or output and supply - with AC supply - with AC/DC supply - between input and output	to DIN 61010, Part 1 2.3kV/50Hz, 1min 510V/50Hz, 1min 510V/50Hz, 1min
Isolation - between input and output - between input and mains supply - between output and mains supply - between output and setup plug	 50V 250V 250V no isolation between output and setup plug

Version 707025/... (Ex)

Marking IEC IECEx	 Ex II (1) G [Ex ia Ga] IIC Ex II (1) D [Ex ia Da] IIIC [Ex ia Ga] IIC [Ex ia Da] IIIC
Ambient temperature range	-10 to +60°C
Supply circuit (terminals L1(L+), N(L-) and PE) Max. safe voltage	230V AC ±10%, 48 — 63Hz or 20 — 53V AC/DC, 48 — 63Hz U_m = 253V
Output circuit (terminals 9(+) and 10(-)) Max. safe voltage	0 — 20mA U_m = 253V
Output circuit (terminals 11(-) and 12(+)) Max. safe voltage	0 — 10V U_m = 253V
Setup circuit Max. safe voltage	5V TTL level U_m = 253V
Sensor circuit (terminals 1 through 5) type of protection Intrinsic Safety Ex ia IIC or Ex ia IIIC Maximum values: For relationship between explosion group and the external reactances reference is made to the table:	U_0 = 6.0V I_0 = 18.9mA P_0 = 28.4mW linear characteristic L_i negligibly low C_i negligibly low

	IIC	IIB	IIA
L_o	20 mH	20 mH	20 mH
C_o	1.3 µF	7.1 µF	10 µF

Approvals/marks of conformity

Mark of conformity	Testing laboratory	Certificates / certification numbers	Test basis	valid for
II (1) G [Ex ia Ga] IIC II (1) D [Ex ia Da] IIIC	PTB	PTB 01 ATEX 2149	EN 60079-0:2012 + A11:2013 EN 60079-11:2012	Type 707025/...
[Ex ia Ga] IIC [Ex ia Da] IIIC	PTB	IECEx PTB 14.0034	IEC 60079-0:2011 IEC 60079-11:2011	Type 707025/...

For all types

Electrical data

Electrical safety	to EN 61010
Electromagnetic compatibility (EMC) - interference emission - immunity to interference	EN 61326-1 Class B[a] to industrial requirements

[a] The product is suitable for industrial use as well as for households and small businesses.

Environmental influences

Ambient/storage temperature range	-10 to +60 °C / -10 to +70 °C
Temperature error	≤ ± 0.005 % per °C deviation from 22 °C[a]
Climatic conditions	< 75 % rel. humidity, no condensation

[a] All specifications refer to the range-end value 20 mA.

Housing

Material	polyamide (PA 6.6)
IP protection	IP20 (EN 60529)
Screw connection	screw terminal 0.2 — 2.5 mm²
Mounting	on 35 mm x 7.5 mm DIN rail to EN 60715
Operating position	upright
Weight	approx. 50 g

Setup interface

The setup interface is used for configuring the transmitter from a PC. Connection is via the PC interface with a TTL/RS232 converter (or an USB/TTL converter) and adapter.

Configurable parameters		
TAG number (6 characters on type 707020/..., for all the others: 10 characters)	Sensor type	Connection circuit (2-/3-/4-wire)
External and internal cold junction	Customized linearization	Range limits
Selection of type lk7 or lk8 (not on type 707020/...)	Input of limit (not on type 707020/...)	Input of differential (upper and lower) (not on type 707020/...)
Output signal rising/falling (inversion)	Digital filter	Response to probe break/short-circuit
Recalibration (fine calibration)	Lead resistance for 2-wire circuit	

Fine calibration

Fine correction means correction of the output signal. The signal can be corrected in the range ± 5 % of the 20 mA end value.
Fine calibration is performed using the setup program.
On type 707021/..., type 707022/... and 707025/... fine calibration can also be carried out from the instrument keys.

Connection diagram

	Type 707020/...	Type 707021/..., Type 707022/... and Type 707025/...
	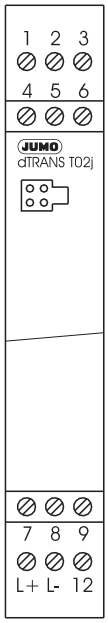	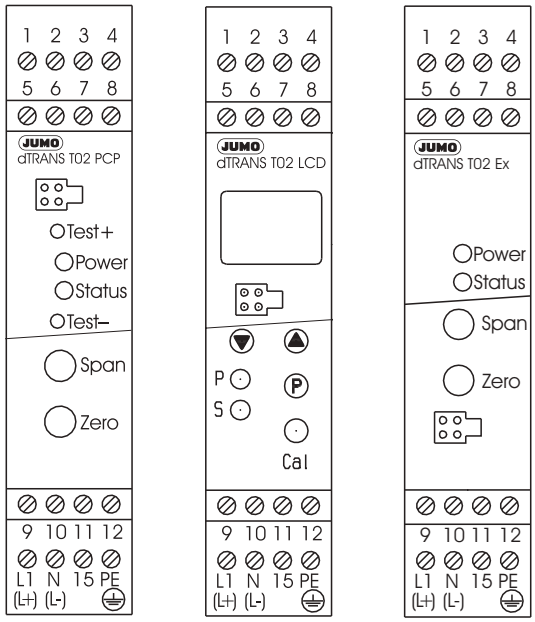
Connection for		
Supply see nameplate	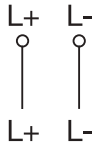	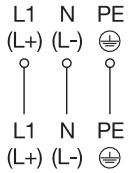
Analog inputs		
Thermocouple	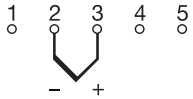	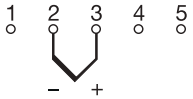
Resistance thermometer in 2-wire circuit	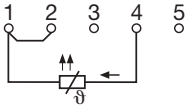	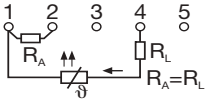
Resistance thermometer in 3-wire circuit	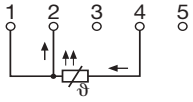	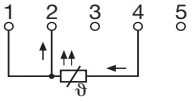
Resistance thermometer in 4-wire circuit	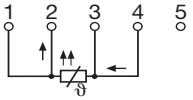	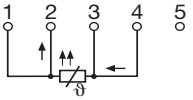
Potentiometer in 2-wire circuit	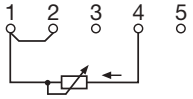	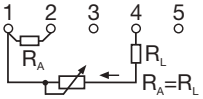
Potentiometer in 3-wire circuit	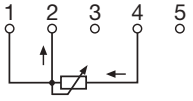	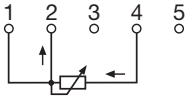
Potentiometer in 4-wire circuit	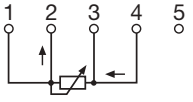	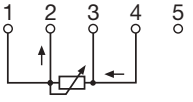

	Type 707020/...	Type 707021/..., Type 707022/... and Type 707025/...
Resistance transmitter in 3-wire circuit	not possible	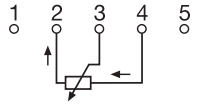
Voltage input < 1V	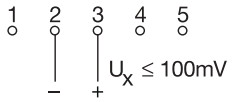	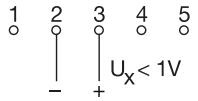
Voltage input ≥ 1V	not possible	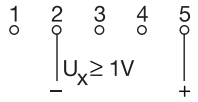
Current input	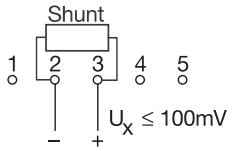 The voltage drop on the shunt[a] must not exceed 100mV	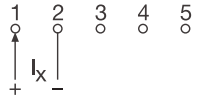
Analog outputs		
Voltage output		
Current output	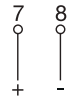	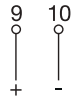
Digital outputs		
Open-collector output 1	not possible	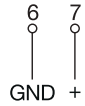 not possible on type 707025/...[b]
Open-collector output 2	not possible	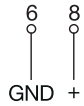 not possible on type 707025/...[b]

[a] When using a shunt resistor, the signal leads and the shunt must be provided with a crimp connector.
[b] On type 707025/... the limits are indicated only via the status and power LEDs.

Connection example for the open-collector output

Connection of a relay

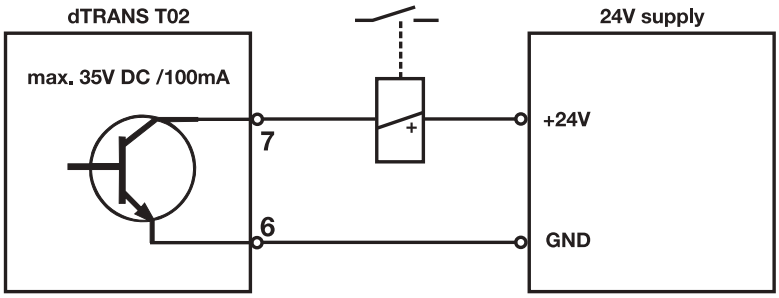

Connection of a PLC

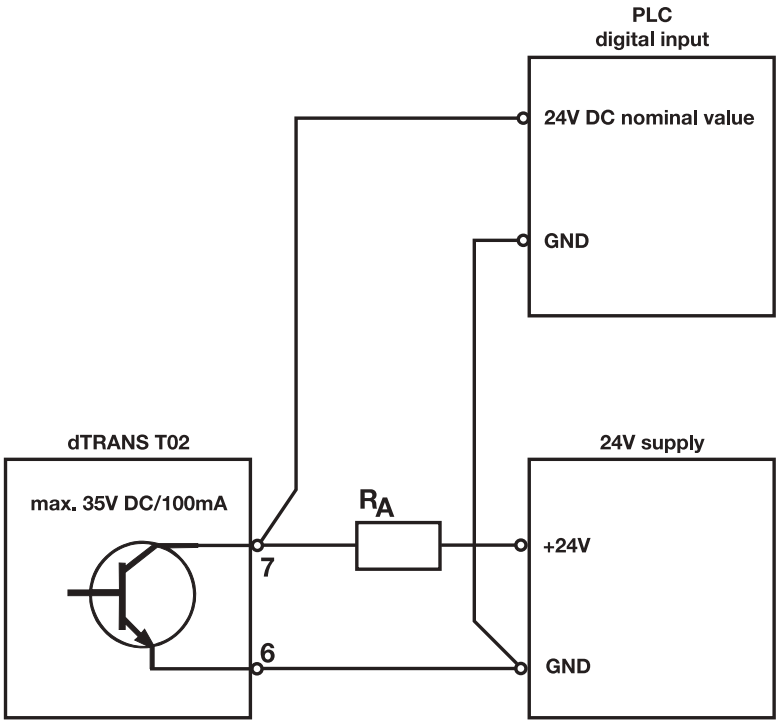

Dimensions

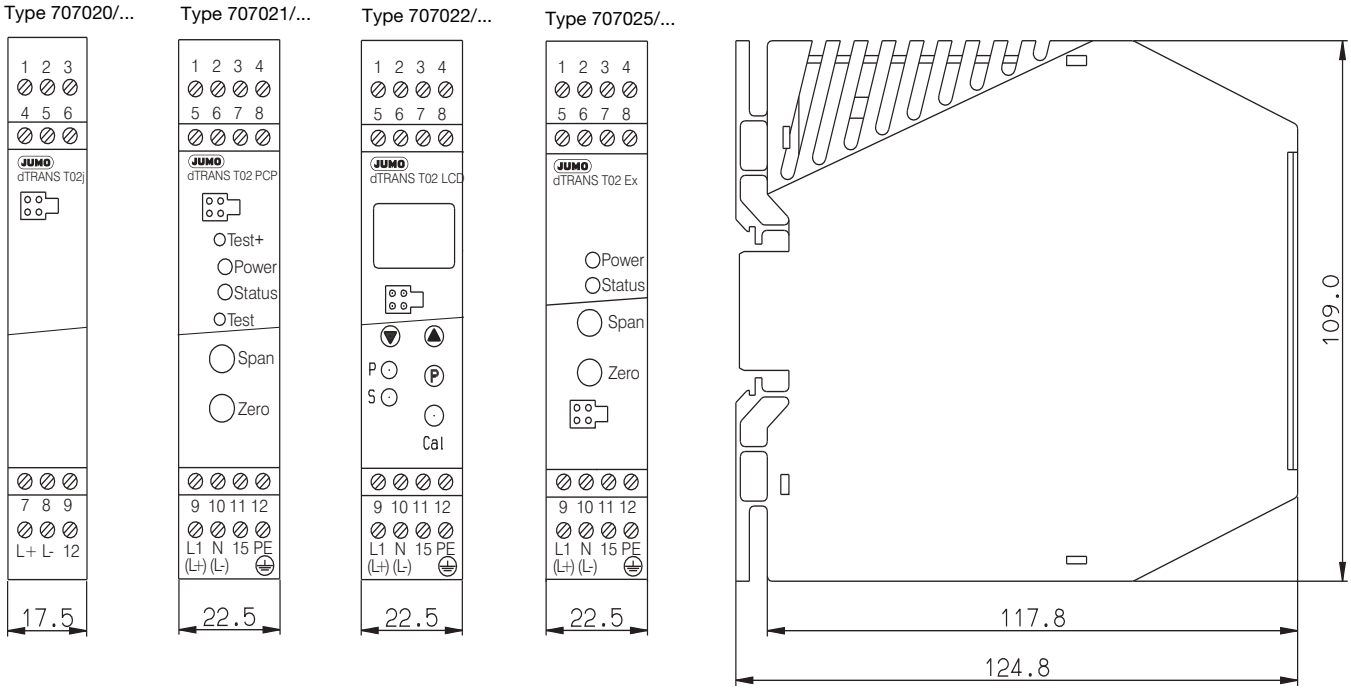

Order details: JUMO dTRANS T02

Programmable 4-wire Transmitter (Smart Transmitter)

					(1) Basic version
				707020	dTRANS T02j - programmable transmitter
				707021	dTRANS T02 PCP - programmable transmitter
				707022	dTRANS T02 LCD - programmable transmitter with LCD display
				707025	dTRANS T02 Ex - programmable transmitter Ex protection
					(2) Input (programmable)
x	x	x	x	888	factory-set (Pt100 DIN vl / 0 to 100 °C)
x	x	x	x	999	configuration to customer specification[a]
					(3) Output (proportional DC current - programmable)
x	x	x	x	888	factory-set (0 — 20 mA)
x	x	x	x	999	configuration to customer specification (4 — 20 mA or 0 — 10 V or 2 — 10 V)
					(4) Supply
			x	03	230 V AC ±10 %, 48 — 63 Hz
	x	x	x	22	20 — 53 V AC/DC, 48 — 63 Hz
	x	x		23	110 — 240 V AC +10/-15 %, 48 — 63 Hz
x				29	24 V DC +10/-15%

	(1)		(2)		(3)		(4)
Order code	[ ]	/	[ ]	-	[ ]	-	[ ]
Order example	707021	/	888	-	888	-	22

[a] For configuration to customer specification, probe type and range have to be specified in plain text.

Standard accessories

- 1 Operating Instructions

Accessory

	Part no.
- Setup program, multilingual	00378730
- PC interface with USB/TTL converter, adapter (socket) and adapter (pins)	00456352

JUMO GmbH & Co. KG
Delivery address: Mackenrodtstraße 14, 36039 Fulda, Germany
Postal address: 36035 Fulda, Germany
Phone: +49 661 6003-0
Fax: +49 661 6003-607
e-mail: mail@jumo.net
Internet: www.jumo.net

JUMO Instrument Co. Ltd.
JUMO House
Temple Bank, Riverway
Harlow, Essex CM20 2DY, UK
Phone: +44 1279 635533
Fax: +44 1279 635262
e-mail: sales@jumo.co.uk
Internet: www.jumo.co.uk

JUMO PROCESS CONTROL INC.
885 Fox Chase, Suite 103
Coatesville PA 19320, USA
Phone: 610-380-8002
1-800-554-JUMO
Fax: 610-380-8009
e-mail: info@JumoUSA.com
Internet: www.JumoUSA.com

JUMO dTRANS T03 J, B, T
Analog 2-wire transmitter with digital adjustment

JUMO dTRANS T03 BU, TU
Analog 3-wire transmitter with digital adjustment

for connection to Pt100 resistance thermometers
for installation in: - terminal head Form B to DIN EN 50446
- terminal head Form J
for mounting on: - mounting rail according to DIN EN 60715

dTRANS T03 J
Type 707030/...

dTRANS T03 B
Type 707031/...

dTRANS T03 BU
Type 707033/...

dTRANS T03 T
Type 707032/...

dTRANS T03 TU
Type 707034/...

Brief description

These transmitters are designed for industrial applications and are used to measure the temperature through Pt100 resistance thermometers in 2-wire or 3-wire circuit connections (Pt500 or Pt1000 linearization upon request).
The 4 to 20 mA (2-wire transmitter) or 0 to 10 V (3-wire transmitter) output signal is linear with temperature.
The continuous analog signal path enables an extremely fast reaction time of the output to a change in temperature (continuous analog measurement instead of digital sampling rate), resulting in a low-noise output signal that is insensitive to interference. A very high degree of precision – even with small ranges – is ensured thanks to the range-specific gain adjustment.
Digital communication allows the transmitter to be adapted to the measurement task (range, probe break and fine calibration).
Two versions are available to suit specific requirements:

Instruments with basic type extension 880/990 (adjustable)
The transmitters are calibrated for a fixed range but can, at any time, be calibrated for a different range through the setup program.
Instruments with basic type extension 881/991 (configurable)
The required range can be configured through the setup program, without sensor simulation and measurement.

Overview of function

	dTRANS T03 J Type 707030/...	dTRANS T03 B Type 707031/...	dTRANS T03 T Type 707032/...	dTRANS T03 BU Type 707033/...	dTRANS T03 TU Type 707034/...
Input	Pt100	Pt100	Pt100	Pt100	Pt100
Connection circuit (sensor)	2-wire	2-wire or 3-wire	2-wire or 3-wire	2-wire or 3-wire	2-wire or 3-wire
Mounting	terminal head Form J	terminal head Form B	mounting rail	terminal head Form B	mounting rail
Output	4 to 20mA	4 to 20mA	4 to 20mA	0 to 10V	0 to 10V
Connection circuit (output)	2-wire	2-wire	2-wire	3-wire	3-wire

Technical data for 2-wire transmitter (Types 707030/..., 707031/... and 707032/...)

Input for resistance thermometer

	dTRANS T03 J Type 707030/...	dTRANS T03 B Type 707031/...	dTRANS T03 T Type 707032/...
Measurement input	Pt100 (EN 60751)		
Range limits	-200 to +850 °C		
Connection circuit	2-wire circuit	2-wire or 3-wire circuit	2-wire or 3-wire circuit
Smallest span	25 °C		
Largest span	1050 °C		
Unit	measuring range configuration in °C or °F		
Zero shift	for spans < 75 °C fixed zero: -40 °C, -20 °C, 0 °C, 20 °C, 40 °C[a]		
	for span 75 °C: ±50 °C		
	for spans > 75 °C: see “Range organization” on page 7		
Sensor lead resistance for 3-wire connection	≤ 11 Ω per conductor		
Sensor lead resistance for 2-wire connection	factory-set: 0 Ω lead resistance settable through setup program		
Sensor current	≤ 0.5 mA		
Sampling rate	continuous measurement because of analog signal path		

[a] -30 °C, -10 °C, 0 °C, 10 °C, 30 °C available upon request

Measurement circuit monitoring to NAMUR recommendation NE43

Underrange	falling to ≤ 3.6 mA
Overrange	rising to ≥ 22 mA to < 28 mA (typically 24 mA)
Probe short-circuit	≤ 3.6 mA
Probe and lead break	positive: ≥ 22 mA to < 28 mA (typically 24 mA) negative: ≤ 3.6 mA

Output

Output signal	proportional DC current 4 to 20 mA
Transfer characteristic	linear with temperature
Transfer accuracy	≤ ± 0.1 %[a]
Damping of ripple on supply voltage	> 40 dB
Burden (R_B)	R_B = (U_b - 7.5 V) divided by 22 mA
Burden error	≤ ± 0.02 % per 100 Ω[a]
Settling time on a temperature change	≤ 10 msec
Calibration conditions	24 V DC at approx. 22 °C
Calibration/configuration accuracy	≤ ± 0.2 %[a, b, c] or ≤ ± 0.2 °C[b]

[a] All details refer to the range-end value 20 mA.
[b] The larger value applies.
[c] If the measuring range end value > 600 °C then the calibration or configuration accuracy is ≤ ± 0.4 %.

Supply voltage

Supply voltage (U_b)	7.5 to 30 V DC The transmitter is only designed for operation in electrical circuit SELV and PELV according to DIN EN 50178.
Reverse polarity protection	yes
Supply voltage error	≤ ± 0.01 % per V deviation from 24 V[a]
Requirements	The transmitter must be equipped with an electrical circuit that meets the requirements of DIN EN 61010-1 with regard to "Limited-energy circuits".

[a] All details refer to the range-end value 20 mA.

Ambient conditions

	dTRANS T03 J Type 707030/...	dTRANS T03 B Type 707031/...	dTRANS T03 T Type 707032/...
Operating temperature range	-50 to +85 °C	-50 to +85 °C	-25 to +70 °C
Storage temperature range	-50 to +85 °C	-50 to +85 °C	-40 to +85 °C
Temperature error	≤ ± 0.01 % per °C deviation from 22 °C[a]		
Climatic conditions	rel. humidity ≤ 95 % annual mean, no condensation		
Vibration strength	to GL Characteristic 2	to GL Characteristic 2	-
EMC - interference emission - immunity to interference	EN 61326 Class B[b] to industrial requirements		
IP enclosure protection - in terminal head / open mounting - on DIN rail	IP54 / IP00 -	IP54 / IP00 -	- IP20

[a] All details refer to the range-end value 20 mA
[b] The product is suitable for industrial use as well as for households and small businesses.

Housing

	Type 707030/...	Type 707031/...	Type 707032/...
Material	polycarbonate (encapsulated)	polycarbonate (encapsulated)	polycarbonate
Screw terminal	admissible cross section (stranded wire): 0.34 to 1.0 mm²; admissible diameter (wire): 0.3 to 1.0 mm; max. torque 0.15 Nm	≤ 1.75 mm²; max. torque 0.6 Nm	≤ 2.5 mm²; max. torque 0.6 Nm
Mounting	inside terminal head Form J	inside terminal head Form B DIN EN 50446; in surface-mounting case (upon request); in switch cabinet (fixing bracket is required)	on DIN rail 35 mm × 7.5 mm (DIN EN 60715); on DIN rail 15 mm (DIN EN 60715); on G-rail (DIN EN 60715)
	Use only original accessories for mounting!		
Operating position	unrestricted		
Weight	approx. 12 g	approx. 45 g	approx. 70 g

System diagrams for 2-wire transmitter

Connection example with supply unit

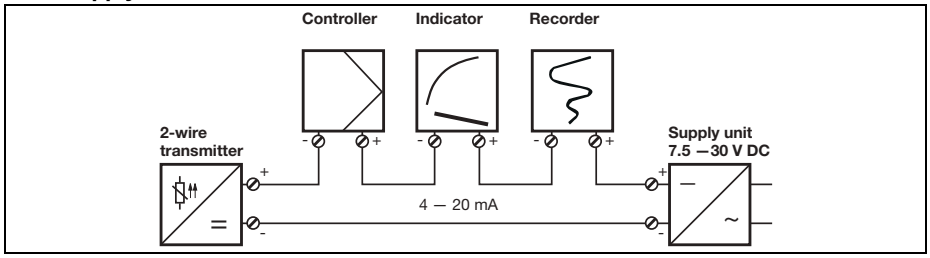

Connection example with supply isolator

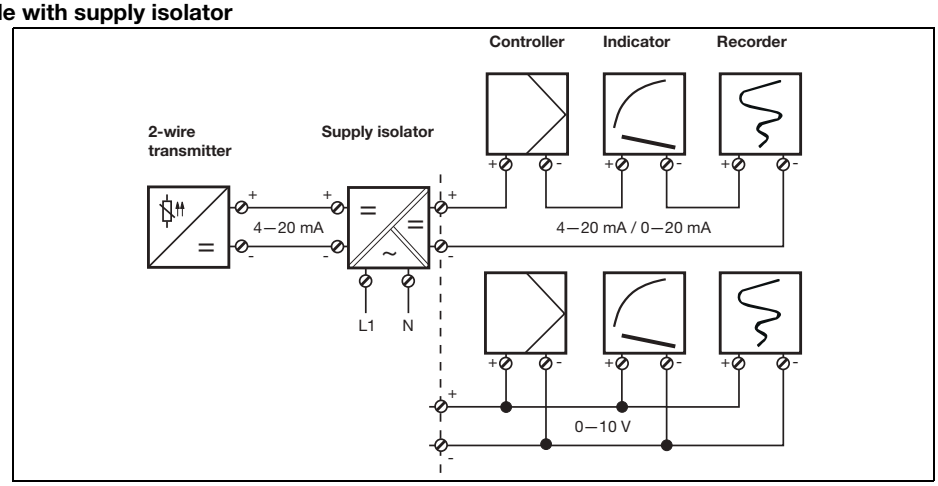

Technical data for 3-wire transmitter (Types 707033/..., and 707034/...)

Input for resistance thermometer

	dTRANS T03 BU Type 707033/...	dTRANS T03 TU Type 707034/...
Measurement input	Pt100 (EN 60751)	
Range limits	-200 to +850 °C	
Connection circuit	2-wire or 3-wire circuit	
Smallest span	25 °C	
Largest span	1050 °C	
Unit	measuring range configuration in °C or °F	
Zero shift	for spans < 75 °C fixed zero: -40 °C, -20 °C, 0 °C, 20 °C, 40 °C	
	for span 75 °C: ±50 °C	
	for spans > 75 °C: see “Range organization” on page 7	
Sensor lead resistance for 3-wire connection	≤ 11 Ω per conductor	
Sensor lead resistance for 2-wire connection	factory-set: 0 Ω lead resistance, settable through setup program	
Sensor current	≤ 0.5 mA	
Sampling rate	continuous measurement because of analog signal path	

Measurement circuit monitoring to NAMUR recommendation NE43

Underrange	0 V
Overrange	rising to > 11 V to < 14 V (typically 12 V)
Probe short-circuit	0 V
Probe and lead break	positive: rising to > 11 V to < 14 V (typically 12 V) negative: 0 V

Output

Output signal	DC voltage 0 to 10 V
Transfer characteristic	linear with temperature
Transfer accuracy	≤ ± 0.2 %[a]
Damping of ripple on supply voltage	> 40 dB
Load	≥ 10 kΩ
Load error	≤ ± 0.1 %[a]
Settling time on a temperature change	≤ 10 msec
Calibration conditions	24 V DC at approx. 22 °C
Calibration/configuration accuracy	≤ ± 0.2 %[a, b, c] or ≤ ± 0.2 °C[b]

[a] All details refer to the range-end value 10 V.
[b] The larger value applies.
[c] If the measuring range end value > 600 °C then the calibration or configuration accuracy is ≤ ± 0.4 %.

Supply voltage

Supply voltage (U_b)	15 to 30 V DC The transmitter is only designed for operation in electrical circuit SELV and PELV according to DIN EN 50178.
Reverse polarity protection	yes
Supply voltage error	≤ ± 0.01 % per V deviation from 24 V[a]
Requirements	The transmitter must be equipped with an electrical circuit that meets the requirements of DIN EN 61010-1 with regard to "Limited-energy circuits".

[a] All details refer to the range-end value 10 V.

Ambient conditions

	dTRANS T03 BU Type 707033/...	dTRANS T03 TU Type 707034/...
Operating temperature range	-40 to +85 °C	-25 to +70 °C
Storage temperature range	-40 to +85 °C	
Temperature error	≤ ± 0.01 % per °C deviation from 22 °C[a]	
Climatic conditions	rel. humidity ≤ 95 % annual mean, no condensation	
Vibration strength	to GL Characteristic 2	-
EMC - interference emission - immunity to interference	EN 61326 Class B[b] to industrial requirements	
IP enclosure protection - in terminal head / open mounting - on DIN rail	 IP54 / IP00 -	 - IP20

[a] All details refer to the range-end value 10 V
[b] The product is suitable for industrial use as well as for households and small businesses.

Housing

	Type 707033/...	Type 707034/...
Material	polycarbonate (encapsulated)	polycarbonate
Screw terminal	≤ 1.75 mm²; max. torque 0.6 Nm	≤ 2.5 mm²; max. torque 0.6 Nm
Mounting	inside terminal head Form B DIN EN 50446; in surface-mounting case (upon request); in switch cabinet (fixing bracket is required)	on DIN rail 35 mm × 7.5 mm (DIN EN 60715); on DIN rail 15 mm (DIN EN 60715); on G-rail (DIN EN 60715)
	Use only original accessories for mounting!	
Operating position	unrestricted	
Weight	approx. 45 g	approx. 70 g

System diagram for 3-wire transmitter

Connection example

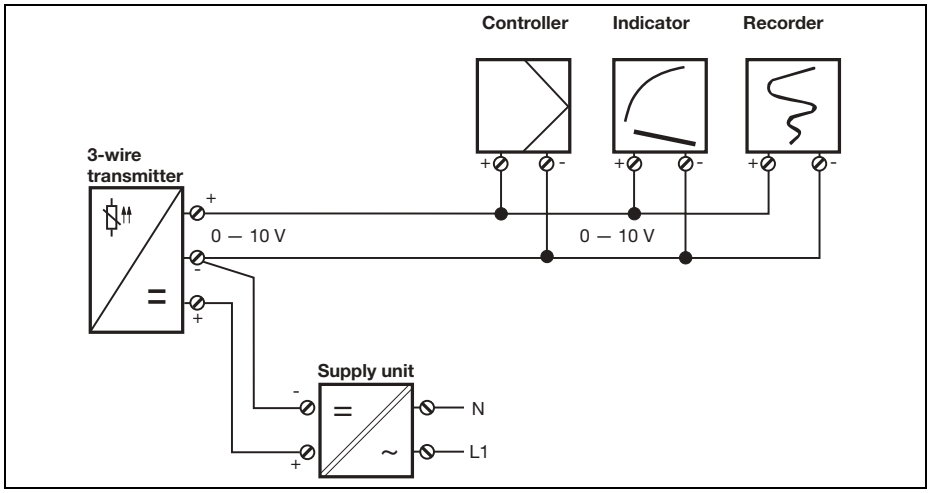

Setup program (for all types)

The setup program is available for calibrating/configuring the transmitter from a PC.
Connection is through a USB/SPI-interface (including adapter) and the setup interface of the transmitter. In order to calibrate/configure the transmitter, it has to be connected to the supply voltage. If no power supply or supply isolator is available, Types 707030/..., 707031/... and 707032/... can be supplied from a 9V block battery.

Adjustable/configurable parameters

- TAG number (8 characters)
- response to probe and cable break
- range start, range end
- lead resistance for 2-wire circuit
- measuring range configuration in °C or °F

Fine calibration

Fine calibration means adjustment of the output signal of a calibrated/configured transmitter. Errors due to the system (such as an unfavorable probe installation) can be compensated. The signal can be adjusted in the range ±0.2 mA for current output and ±0.1 V for voltage output. Negative output voltages are not possible with voltage output. Fine calibration can only be carried out through the setup program.

Hardware and software requirements

The following hardware and software requirements have to be met for installing and operating the setup program:

- IBM-PC or compatible PC
- 256 MB main memory
- 50 MB available on hard disk
- 1 USB interface
- Windows 7, Windows 8, and Windows 10 (respectively 32-bit and 64-bit version)

Connection layout for calibrating/configuring the dTRANS T03 B and BU

Calibration
(basic type extension 880/990)

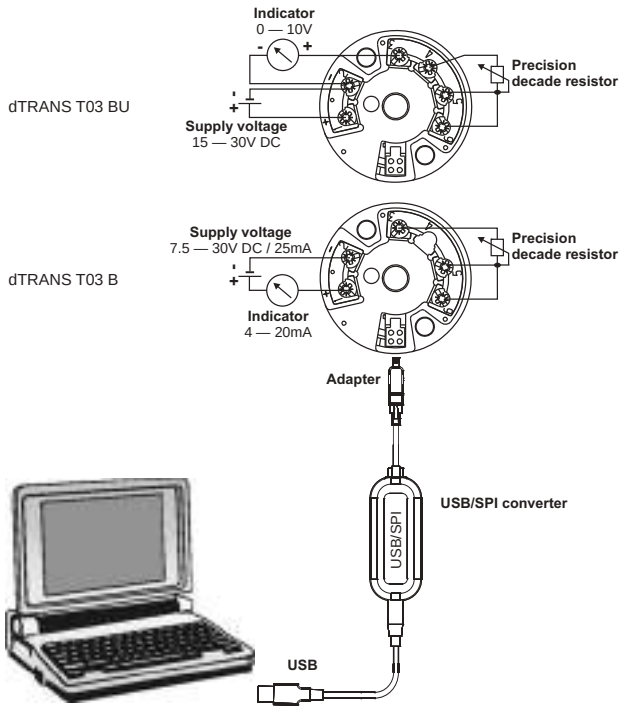

Configuration
(basic type extension 881/991)

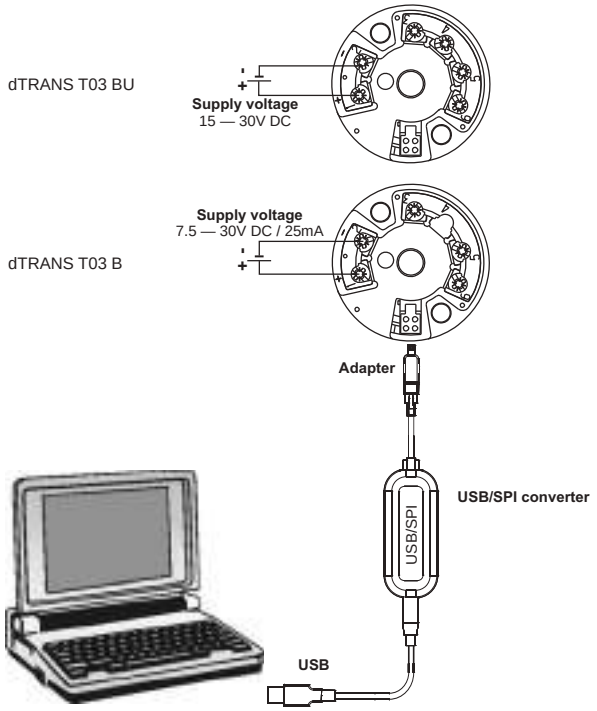

Range organization

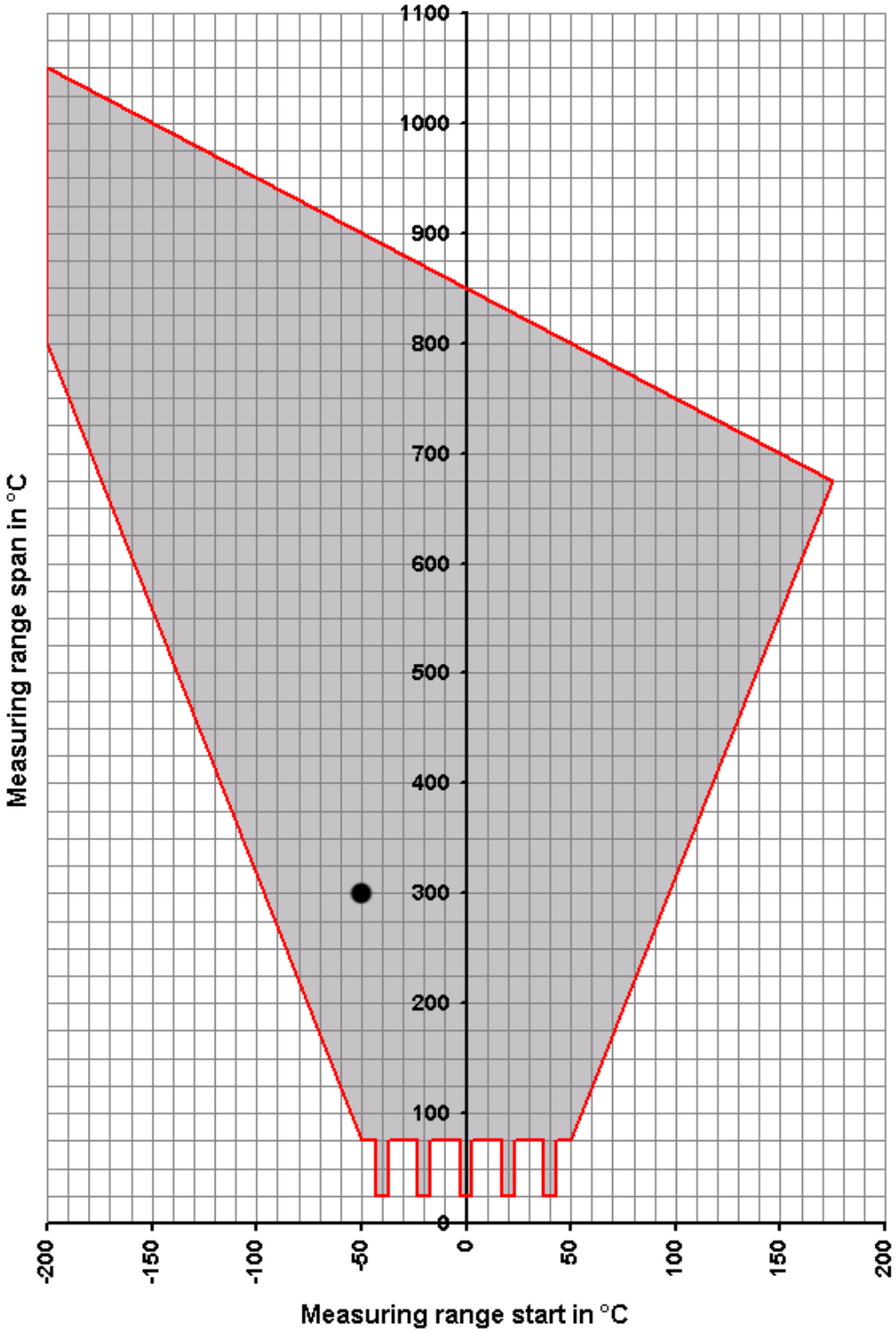

All the possible range-start values in relation to the range span are contained within the gray area.

range span = range end – range start

Example: range start = -50°C, range end = 250°C
range span = range end – range start = 250°C - (-50°C) = 300°C

Caution: When selecting the range start, make sure it lies within the gray area.

Please note: for spans smaller than 75°C, the only permissible start values are:
-40°C, -20°C, 0°C, +20°C and +40°C.

Connection diagram for 2-wire transmitter

dTRANS T03 J - Type 707030/...

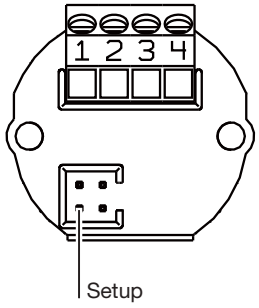

Connection for		Terminal assignments		
	Supply voltage 7.5 to 30V DC Current output 4 to 20mA	+1 -2	$R_B = \frac{U_b - 7.5V}{22mA}$ R_B = burden resistance U_b = supply voltage	1 2 + –
Analog inputs				
	Resistance thermometer in 2-wire circuit	3 4	standard is $R_L = 0\Omega$	3 4 ϑ

Caution: the maximum torque of the screw terminals is 0.15 Nm.

dTRANS T03 B - Type 707031/...

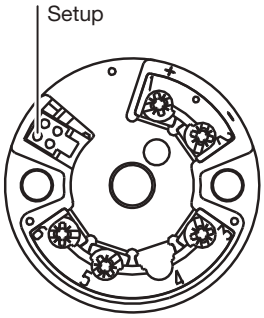

Connection for		Terminal assignments		
	Supply voltage 7.5 to 30V DC Current output 4 to 20mA	+1 -2	$R_B = \frac{U_b - 7.5V}{22mA}$ R_B = burden resistance U_b = supply voltage	1 2 + –
Analog inputs				
	Resistance thermometer in 2-wire circuit	3 5 6	standard is $R_L = 0\Omega$	3 5 6 ϑ
	Resistance thermometer in 3-wire circuit	3 5 6	$R_L \leq 11\Omega$ R_L = lead resistance per conductor	3 5 6 ϑ

dTRANS T03 T - Type 707032/...

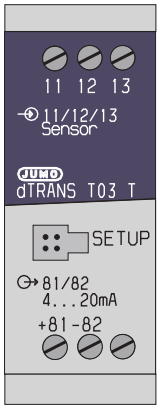

Connection for		Terminal assignments		
	Supply voltage 7.5 to 30V DC Current output 4 to 20mA	+81 -82	$R_B = \frac{U_b - 7.5V}{22mA}$ R_B = burden resistance U_b = supply voltage	81 82 + –
Analog inputs				
	Resistance thermometer in 2-wire circuit	11 12 13	standard is $R_L = 0\Omega$	11 12 13 ϑ
	Resistance thermometer in 3-wire circuit	11 12 13	$R_L \leq 11\Omega$ R_L = lead resistance per conductor	11 12 13 ϑ

Connection diagram for 3-wire transmitter

dTRANS T03 BU - Type 707033/...

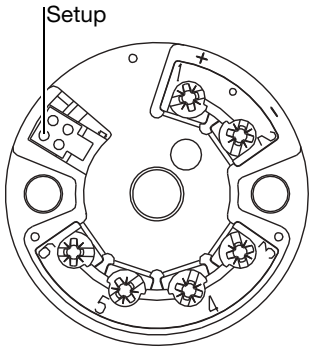

Connection for		Terminal assignments		
	Supply voltage 15 to 30V DC	+1 -2		1 2 3 + – +
	Voltage output 0 to 10V	-2 +3	load ≥ 10kΩ	
Analog inputs				
	Resistance thermometer in 2-wire circuit	4 5 6	standard is $R_L = 0\Omega$	4 5 6
	Resistance thermometer in 3-wire circuit	4 5 6	$R_L \leq 11\Omega$ R_L = lead resistance per conductor	4 5 6

dTRANS T03 TU - Type 707034/...

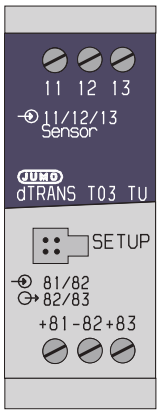

Connection for		Terminal assignments		
	Supply voltage 15 to 30V DC	+81 -82		81 82 83 + – +
	Voltage output 0 to 10V	-82 +83	load ≥ 10kΩ	
Analog inputs				
	Resistance thermometer in 2-wire circuit	11 12 13	standard is $R_L = 0\Omega$	11 12 13
	Resistance thermometer in 3-wire circuit	11 12 13	$R_L \leq 11\Omega$ R_L = lead resistance per conductor	11 12 13

Dimensions

dTRANS T03 J

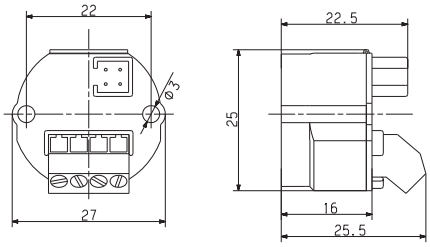

dTRANS T03 B and dTRANS T03 BU

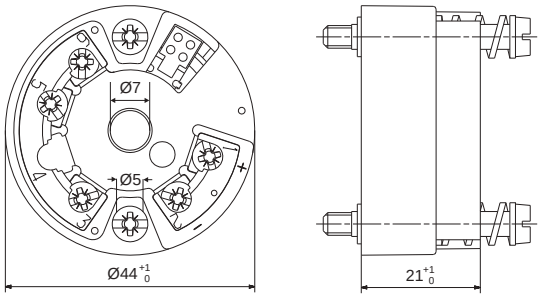

dTRANS T03 T and dTRANS T03 TU

Mounting rail: DIN rail 35 mm × 7,5 mm EN 60715

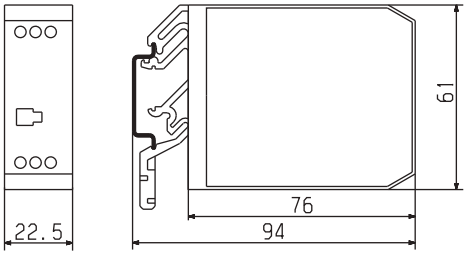

Surface-mounted housing

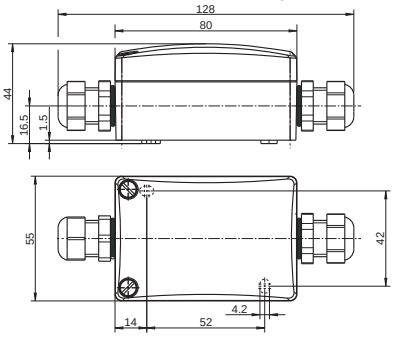

Order details: JUMO dTRANS T03

Analog transmitter with digital adjustment

						(1)	**Basic version**
					707030		dTRANS T03 J analog 2-wire transmitter for installation in terminal head Form J (2-wire circuit only)
					707031		dTRANS T03 B analog 2-wire transmitter for installation in terminal head Form B
					707032		dTRANS T03 T analog 2-wire transmitter for rail mounting
					707033		dTRANS T03 BU analog 3-wire transmitter for installation in terminal head Form B
					707034		dTRANS T03 TU analog 3-wire transmitter for rail mounting
						(2)	**Basic type extensions**
x	x	x	x	x	880		adjustable[a, b]
x	x	x	x	x	881		configurable[a, c]
x	x	x	x	x	990		adjustable[d, b]
x	x	x	x	x	991		configurable[d, c]
						(3)	**Input**
	x	x	x	x	001		Pt100 in 3-wire circuit[e]
x	x	x	x	x	003		Pt100 in 2-wire circuit[e]
						(4)	**Output**
x	x	x			005		4 to 20mA
			x	x	040		0 to 10V
						(5)	**Extra codes**
x	x	x	x	x	000		none
	x		x		243		transmitter in surface-mounting case
x					950		railway application[f]

	(1)		(2)		(3)		(4)		(5)
Order code	[ ]	/	[ ]	-	[ ]	-	[ ]	/	[ ]
Order example	707031	/	880	-	001	-	005	/	243

[a] factory-set (probe break: positive; lead resistance: 0 Ω)
[b] The transmitters are calibrated for a fixed range but can be calibrated for a different range through the setup program and additional equipment (resistance decade and measuring device) at any time.
[c] The required range can be configured through the setup program without sensor simulation and measurement.
[d] setting to customer specification (please specify in plain text)
[e] Pt500 or Pt1000 upon request
[f] upon request

Standard accessories

- Operating Instructions
- Fixing items

Accessories

- Setup program, multilingual
- PC interface with USB/SPI converter and adapter (socket), part no. 00553388
- Fixing bracket for mounting Type 707031/... and Type 707033/... on mounting rail, part no. 00352463
- Supply units 1- way and 4-way (Data Sheet 707500)

JUMO GmbH & Co. KG
Delivery address: Mackenrodtstraße 14
36039 Fulda, Germany
Postal address: 36035 Fulda, Germany
Phone: +49 661 6003-0
Fax: +49 661 6003-607
Email: mail@jumo.net
Internet: www.jumo.net

JUMO Instrument Co. Ltd.
JUMO House
Temple Bank, Riverway
Harlow, Essex, CM20 2DY, UK
Phone: +44 1279 63 55 33
Fax: +44 1279 62 50 29
Email: sales@jumo.co.uk
Internet: www.jumo.co.uk

JUMO Process Control, Inc.
6733 Myers Road
East Syracuse, NY 13057, USA
Phone: +1 315 437 5866
Fax: +1 315 437 5860
Email: info.us@jumo.net
Internet: www.jumousa.com

JUMO dTRANS T04
Four-wire Transmitter, settable via DIP switch/PC setup program

for connection to Pt100/Pt1000 resistance thermometer or potentiometer, rail-mounted to EN 60715

dTRANS T04
Type 707040/...

Brief description

These transmitters are designed for industrial applications and are used to measure the temperature or resistance through a Pt100 or Pt1000 resistance sensor or potentiometer in two-wire or three-wire circuit connection.
The 0 to 20 mA, 4 to 20 mA or 0 to 10 V output signal is available linear with temperature/resistance. The continuous analog signal path enables a fast reaction of the output to a temperature change (analog continuous measurement instead of digital sampling rate). This results in a low-noise output signal that is immune to interference. High precision, even with small ranges, is ensured by the range-specific gain adjustment.
The transmitter can be set either on the instrument itself, via DIP switch, or through the PC setup program.

Block structure

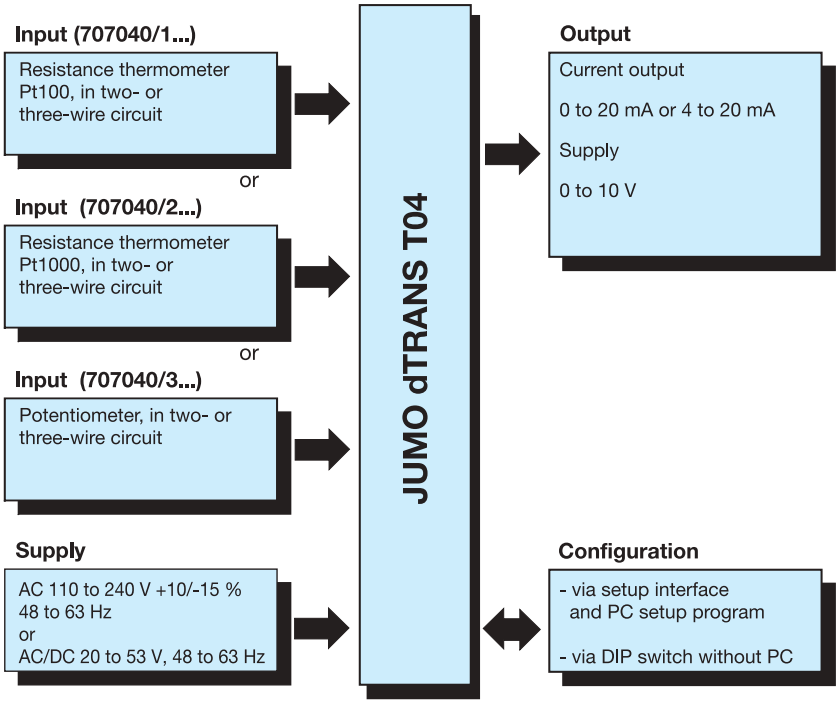

Controls

	The chosen measuring range and output response can be set via DIP switch. Using the PC setup program, additional ranges and parameters are configurable.

Key features

- Measuring range selectable via DIP switch or through the PC setup program
- Choice of signal output: 0 to 10 V, 0 to 20 mA or 4 to 20 mA
- Fast response, thanks to continuous analog measurement
- Low-noise current signal, immune to interference
- Electrical isolation between input, output/mains supply
- Current/voltage output

JUMO GmbH & Co. KG
Delivery address: Mackenrodtstraße 14
36039 Fulda, Germany
Postal address: 36035 Fulda, Germany
Phone: +49 661 6003-0
Fax: +49 661 6003-607
Email: mail@jumo.net
Internet: www.jumo.net

JUMO Instrument Co. Ltd.
JUMO House
Temple Bank, Riverway
Harlow, Essex, CM20 2DY, UK
Phone: +44 1279 63 55 33
Fax: +44 1279 62 50 29
Email: sales@jumo.co.uk
Internet: www.jumo.co.uk

JUMO Process Control, Inc.
6733 Myers Road
East Syracuse, NY 13057, USA
Phone: +1 315 437 5866
Fax: +1 315 437 5860
Email: info.us@jumo.net
Internet: www.jumousa.com

Technical data

Input

Measurement input	Pt100 EN 60751	Pt1000 EN 60751	Potentiometer
Range limits	-200 to +850 °C	-200 to +850 °C	0 to 11000 Ω
Connection circuit	Two- and three-wire circuit		
Configuration	Through DIP switch or using the PC setup program		
Shortest span	25 °C	25 °C	250 Ω
Largest span	1050 °C	1050 °C	11000 Ω
Range start for shortest span	-50 to +20 °C	-50 to +20 °C	0 to 500 Ω
Range start for other spans	See range organization on Page 5 and Page 6		
Unit	°C (°F settable through the PC setup program)	°C (°F settable through the PC setup program)	Ω
Sensor lead resistance for 3-wire connection	≤ 11 Ω per conductor		
Sensor lead resistance for 2-wire connection	Factory-set: 0 Ω lead resistance, adjustable through the PC setup program		
Sensor current	≤ 0.5 mA	≤ 0.1 mA	≤ 0.1 mA
Sampling rate	Continuous measurement (analog signal path)		

Output

Measurement input	Pt100 EN 60751	Pt1000 EN 60751	Potentiometer
Output signal - Current: - Voltage:	selectable through DIP switch or PC setup program proportional DC current 0 to 20 mA or 4 to 20 mA DC voltage 0 to 10 V		
Transfer characteristic - For resistance thermometer: - For potentiometer:	Linear with temperature Linear with resistance		
Transfer accuracy	≤ ±0.1 %[a]		
Residual ripple	≤ ±0.2 %[a]		
Burden (with current output)	≤ 750 Ω		
Burden error	≤ ±0.01 % per 100 Ω[a]		
Current limiting	> 21.6 to < 28 mA (24 mA typical)		
Load (with voltage output)	≥ 10 kΩ		
Load error	≤ ±0.1 %[a]		
Voltage limiting	> 11 to < 14 V (12 V typical)		
Settling time on a temperature change	≤ 40 msec		
Settling time after switch-on or reset	≤ 200 msec		
Calibration conditions	AC 230 V or DC 24 V (depending on the supply) at 23 °C (±5 °C)		
Calibration accuracy	≤ ±0.3 %[a, b] or ≤ ±0.3 °C[b]	≤ ±0.5 %[a, b] or ≤ ±0.5 °C[b]	≤ ±0.3 %[a]
Voltage supply error	≤ ±0.05 %[a]		

[a] All data refer to the range end value 10 V or 20 mA.
[b] The larger value applies.

Measuring circuit monitoring

Underrange: - Current output 4 to 20 mA - Current output 0 to 20 mA - Voltage output 0 to 10 V	 Falling to ≤ 3.6 mA < 0 mA (-0.05 mA typical) < 0 V -0.6 V typical)
Overrange - Current output 4 to 20 mA - Current output 0 to 20 mA - Voltage output 0 to 10 V	 Rising to > 21.6 to < 28 mA (24 mA typical) Rising to > 21.6 to < 28 mA (24 mA typical) Rising to > 11 to < 14 V (12 V typical)

JUMO GmbH & Co. KG
Delivery address: Mackenrodtstraße 14
36039 Fulda, Germany
Postal address: 36035 Fulda, Germany
Phone: +49 661 6003-0
Fax: +49 661 6003-607
Email: mail@jumo.net
Internet: www.jumo.net

JUMO Instrument Co. Ltd.
JUMO House
Temple Bank, Riverway
Harlow, Essex, CM20 2DY, UK
Phone: +44 1279 63 55 33
Fax: +44 1279 62 50 29
Email: sales@jumo.co.uk
Internet: www.jumo.co.uk

JUMO Process Control, Inc.
6733 Myers Road
East Syracuse, NY 13057, USA
Phone: +1 315 437 5866
Fax: +1 315 437 5860
Email: info.us@jumo.net
Internet: www.jumousa.com

Probe short-circuit: - Current output 4 to 20 mA - Current output 0 to 20 mA - Voltage output 0 to 10 V	 ≥ 1.5 to ≤ 3.6 mA (2 mA typical) < 0 mA (-0.05 mA typical) < 0 V (-0.6 V typical)
Probe and lead break: - Current output 4 to 20 mA - Current output 0 to 20 mA - Voltage output 0 to 10 V	Signal is configurable. Positive signal: > 21.6 to < 28 mA (24 mA typical) Negative signal: ≥ 1.5 to ≤ 3.6 mA (2 mA typical) Positive signal: > 21.6 to < 28 mA (24 mA typical) Negative signal: < 0mA (-0.05 mA typical) Positive signal: > 11 V to < 14 V (12 V typical) Negative signal: < 0 V (-0.6 V typical)

Electrical data

Voltage supply	AC 110 to 240 V +10/-15 %, 48 to 63 Hz	AC/DC 20 to 53 V, 48 to 63 Hz
Power consumption	4 VA	3 VA
Electrical safety	To EN 61010, Part 1 Overvoltage category III, pollution degree 2, for switching cabinet mounting to EN 50178	To EN 61010, Part 1 Protection class III, for operation with SELV/PELV circuits
Test voltage	3700 V	500 V
Electrical isolation	The supply is electrically isolated from the input and the output. There is no electrical isolation between input, output and setup connector.	

Environmental influences

Operating temperature range	-25 to +55 °C
Storage temperature range	-40 to +90 °C
Storage temperature humidity	Rel. humidity ≤ 85 %, no condensation
Temperature error	≤ ±0.01 %/°C[a]
Climatic conditions	EN 60721-3-3 3K3 Rel. humidity ≤ 85 % annual average, no condensation
Vibration strength	According to GL Characteristic 2
EMC - Interference emission - Immunity to interference	EN 61326 Class B[b] To industrial requirements
IP enclosure protection	IP20 to EN 60529

[a] All data refer to the range end value 10 V or 20 mA.
[b] The product is suitable for industrial use as well as for households and small businesses.

Housing

Material	Polycarbonate
Flammability class	UL 94 V0
Dimensions (W × H × D)	22.5 mm × 93.5 × 60 mm
Screw terminal	2,5 mm^2 wire cross-section/2.5 mm wire dia.
Mounting	On 35 mm × 7.5 mm DIN rail to EN 60715 A.1, for installation in control cabinets
Operating position	Unrestricted
Weight	Approx. 100 g

JUMO GmbH & Co. KG
Delivery address: Mackenrodtstraße 14
36039 Fulda, Germany
Postal address: 36035 Fulda, Germany
Phone: +49 661 6003-0
Fax: +49 661 6003-607
Email: mail@jumo.net
Internet: www.jumo.net

JUMO Instrument Co. Ltd.
JUMO House
Temple Bank, Riverway
Harlow, Essex, CM20 2DY, UK
Phone: +44 1279 63 55 33
Fax: +44 1279 62 50 29
Email: sales@jumo.co.uk
Internet: www.jumo.co.uk

JUMO Process Control, Inc.
6733 Myers Road
East Syracuse, NY 13057, USA
Phone: +1 315 437 5866
Fax: +1 315 437 5860
Email: info.us@jumo.net
Internet: www.jumousa.com

PC setup program

The PC setup program is used for configuration and fine adjustment of the transmitter from a PC (e.g. when the sensor drifts). Connection is through the PC interface with USB/TTL converter and adapter and the setup interface of the transmitter. In order to configure the transmitter, it must be connected to the supply.

Configurable parameters

- TAG number (14 characters)
- response to probe and cable break
- range start, range end
- output signal 0(4) to 20 mA or 0 to 10 V
- lead resistance for 2-wire circuit

Fine adjustment

Fine adjustment means correction of the output signal of a configured transmitter; systematic errors such as those caused by an unsuitable probe mounting can be compensated. The signal can be adjusted in the range ±0.2 mA for current output and ±0.1 V for voltage output. Fine adjustment can only be carried out through the setup program.

Hardware and software requirements

The following hardware and software requirements must be met for installing and operating the PC setup program:

- IBM-PC or compatible PC with Pentium processor or higher
- 512 MB main memory
- 500 MB available on hard disk
- CD-ROM drive
- 1 free USB interface
- Windows® 7, 8 or 10 (32-bit version and 64-bit version)

DIP switch configuration

Function or measuring range for Pt100 and Pt1000	Function or measuring range for potentiometer	DIP switch					
		1	2	3	4	5	6
PC setup[a]	PC setup[a]						
Output 0 to 10 V	Output 0 to 10 V	•					
Output 0 to 20 mA	Output 0 to 20 mA		•				
Output 4 to 20 mA	Output 4 to 20 mA	•	•				
Range 0 to 50 °C	Range 0 to 500 Ω			•			
Range 0 to 60 °C	Range 0 to 1 kΩ				•		
Range 0 to 100 °C	Range 0 to 2 kΩ			•	•		
Range 0 to 150 °C	Range 0 to 3 kΩ					•	
Range 0 to 200 °C	Range 0 to 4 kΩ			•		•	
Range 0 to 250 °C	Range 0 to 5 kΩ				•	•	
Range 0 to 300 °C	Range 0 to 6 kΩ			•	•	•	
Range 0 to 400 °C	Range 0 to 7 kΩ						•
Range 0 to 500 °C	Range 0 to 8 kΩ			•			•
Range 0 to 600 °C	Range 0 to 9 kΩ				•		•
Range -20 to +80 °C	Range 0 to 10 kΩ			•	•		•
Range -30 to +60 °C	Range 0 to 11 kΩ					•	•
Range -30 to +70 °C				•		•	•
Range -40 to +60 °C					•	•	•
Range -50 to +50 °C				•	•	•	•

• = on

[a] When configuring through the PC setup program, the input **and** output must be configured from the PC.

JUMO GmbH & Co. KG
Delivery address: Mackenrodtstraße 14
36039 Fulda, Germany
Postal address: 36035 Fulda, Germany
Phone: +49 661 6003-0
Fax: +49 661 6003-607
Email: mail@jumo.net
Internet: www.jumo.net

JUMO Instrument Co. Ltd.
JUMO House
Temple Bank, Riverway
Harlow, Essex, CM20 2DY, UK
Phone: +44 1279 63 55 33
Fax: +44 1279 62 50 29
Email: sales@jumo.co.uk
Internet: www.jumo.co.uk

JUMO Process Control, Inc.
6733 Myers Road
East Syracuse, NY 13057, USA
Phone: +1 315 437 5866
Fax: +1 315 437 5860
Email: info.us@jumo.net
Internet: www.jumousa.com

Measuring range organization (resistance thermometer)

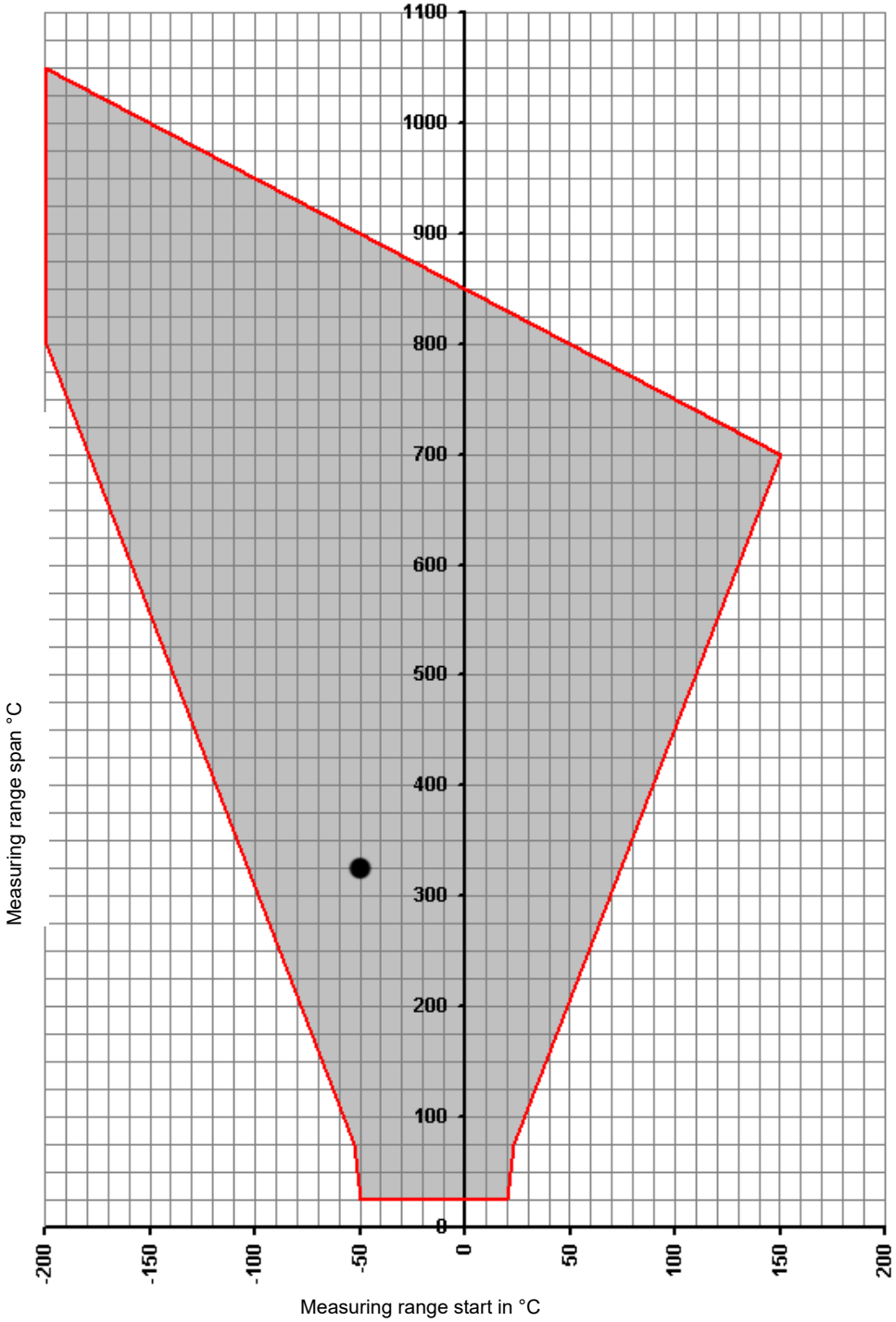

All the possible range-start values in relation to the range span are contained within the gray area.

range span = range end – range start

Example: Range start = -50 °C, range end = 275 °C
Rrange span = range end – range start = 275 °C - (-50 °C) = 325 °C

Please note: When selecting the range start, make sure it lies within the gray area.

JUMO GmbH & Co. KG
Delivery address: Mackenrodtstraße 14
36039 Fulda, Germany
Postal address: 36035 Fulda, Germany
Phone: +49 661 6003-0
Fax: +49 661 6003-607
Email: mail@jumo.net
Internet: www.jumo.net

JUMO Instrument Co. Ltd.
JUMO House
Temple Bank, Riverway
Harlow, Essex, CM20 2DY, UK
Phone: +44 1279 63 55 33
Fax: +44 1279 62 50 29
Email: sales@jumo.co.uk
Internet: www.jumo.co.uk

JUMO Process Control, Inc.
6733 Myers Road
East Syracuse, NY 13057, USA
Phone: +1 315 437 5866
Fax: +1 315 437 5860
Email: info.us@jumo.net
Internet: www.jumousa.com

Measuring range organization (potentiometer)

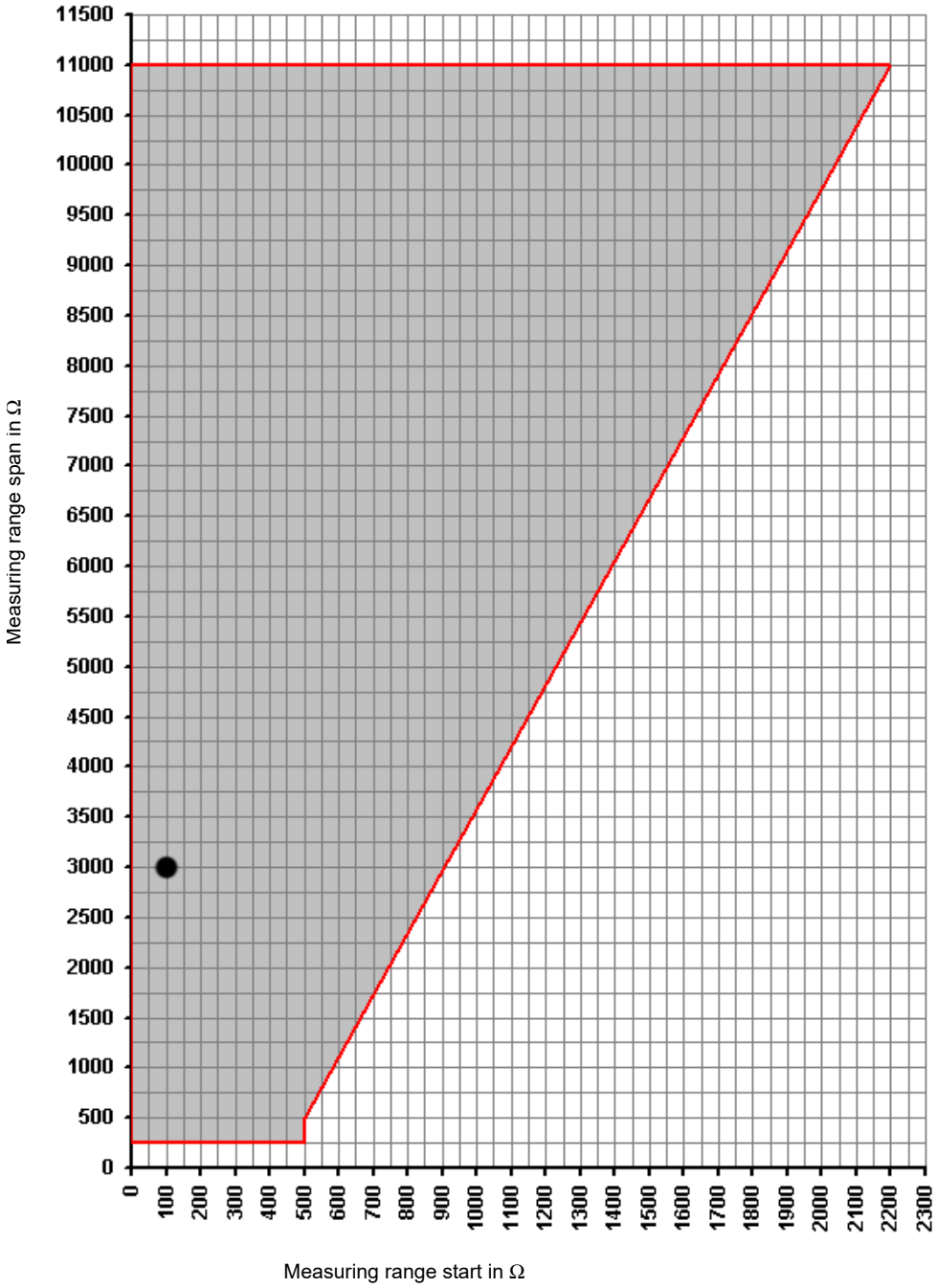

All the possible range-start values in relation to the range span are contained within the gray area.

range span = range end – range start

Example: Range start = 100 Ω, range end = 3100 Ω
Rrange span = range end – range start = 3100 Ω – 100 Ω = 3000 Ω

Please note: When selecting the range start, make sure it lies within the gray area.

Connection diagram

JUMO GmbH & Co. KG
Delivery address: Mackenrodtstraße 14
36039 Fulda, Germany
Postal address: 36035 Fulda, Germany
Phone: +49 661 6003-0
Fax: +49 661 6003-607
Email: mail@jumo.net
Internet: www.jumo.net

JUMO Instrument Co. Ltd.
JUMO House
Temple Bank, Riverway
Harlow, Essex, CM20 2DY, UK
Phone: +44 1279 63 55 33
Fax: +44 1279 62 50 29
Email: sales@jumo.co.uk
Internet: www.jumo.co.uk

JUMO Process Control, Inc.
6733 Myers Road
East Syracuse, NY 13057, USA
Phone: +1 315 437 5866
Fax: +1 315 437 5860
Email: info.us@jumo.net
Internet: www.jumousa.com

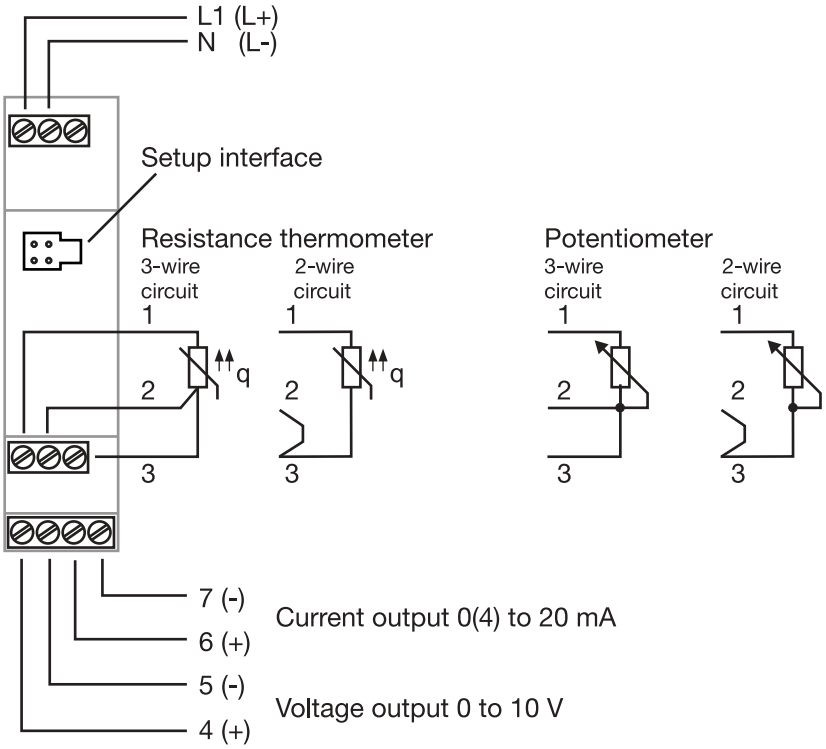

Dimensions

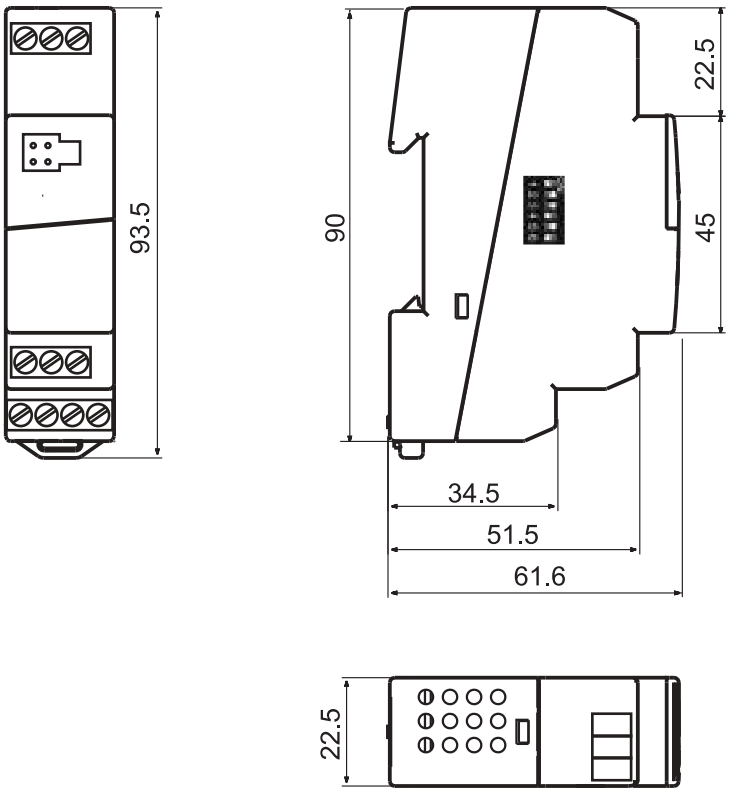

Order details

JUMO GmbH & Co. KG
Delivery address: Mackenrodtstraße 14
36039 Fulda, Germany
Postal address: 36035 Fulda, Germany
Phone: +49 661 6003-0
Fax: +49 661 6003-607
Email: mail@jumo.net
Internet: www.jumo.net

JUMO Instrument Co. Ltd.
JUMO House
Temple Bank, Riverway
Harlow, Essex, CM20 2DY, UK
Phone: +44 1279 63 55 33
Fax: +44 1279 62 50 29
Email: sales@jumo.co.uk
Internet: www.jumo.co.uk

JUMO Process Control, Inc.
6733 Myers Road
East Syracuse, NY 13057, USA
Phone: +1 315 437 5866
Fax: +1 315 437 5860
Email: info.us@jumo.net
Internet: www.jumousa.com

				(1)	**Basic version**[a]
			707040/1		dTRANS T04 for Pt100 resistance thermometer
			707040/2		dTRANS T04 for Pt1000 resistance thermometer
			707040/3		dTRANS T04 for potentiometer
				(2)	**Input**
x	x		888		Factory-set[b] (three-wire circuit, 0 to 100 °C)
		x	888		Factory-set[b] (three-wire circuit, 0 to 1 kΩ)
x	x	x	999		Configuration to customer specification (please specify in plain text)[c]
				(3)	**Output**
x	x	x	888		Factory-set (0 to 20 mA)
x	x	x	999		Setting to customer specification (please specify in plain text)[c]
				(4)	**Voltage supply**
x	x	x	22		AC/DC 20 to 53 V, 48 to 63 Hz
x	x	x	23		AC 110 to 240 V +10/-15 %, 48 to 63 Hz

[a] It is not possible to switch between the sensor types.
[b] Additional measuring ranges are selectable via DIP switch or PC setup program (see page 4).
[c] Please check whether the required measuring range and output can be set via DIP switch. In such a case, “factory-set” can be ordered.

	(1)		(2)		(3)		(4)
Order code		-		-		-	
Order example	707040/1	-	888	-	888	-	23

Standard accessory

Operating Manual

Accessories – Data Sheet 709700

Article	**Part no.**
PC setup program, multilingual	00448774
PC interface with USB/TTL converter, adapter (socket) and adapter (pins)	00456352

JUMO GmbH & Co. KG
Delivery address: Mackenrodtstraße 14
36039 Fulda, Germany
Postal address: 36035 Fulda, Germany
Phone: +49 661 6003-0
Fax: +49 661 6003-607
Email: mail@jumo.net
Internet: www.jumo.net

JUMO Instrument Co. Ltd.
JUMO House
Temple Bank, Riverway
Harlow, Essex CM 20 2DY, UK
Phone: +44 1279 63 55 33
Fax: +44 1279 62 50 29
Email: sales@jumo.co.uk
Internet: www.jumo.co.uk

JUMO Process Control, Inc.
6733 Myers Road
East Syracuse, NY 13057, USA
Phone: +1 315 437 5866
Fax: +1 315 437 5860
Email: info.us@jumo.net
Internet: www.jumousa.com

JUMO dTRANS T05

Programmable two-wire transmitter

for installation into terminal head form B and for installation on DIN rail

Brief description

The transmitters record sensor signals from RTD temperature probes, thermocouples, resistance transmitters, or resistors/potentiometers. When using a resistor/potentiometer or RTD temperature probe, the sensor connection on the input side can be connected with a two-wire, three-wire, or four-wire circuit. Voltage signals in the range from -100 to +1100 mV can also be recorded. Depending on the selected measurement input, the linear and temperature-linear linearization variants and the possibility of easily configurable customer-specific linearization are available.

Type 707050 delivers 4 to 20 mA as an output signal. Type 707051 delivers 4 to 20 mA or 0 to 10 V as an output signal. The measurement input and the output signal are galvanically isolated from one another. The output signal can be reversed for both types.

The transmitter configuration with respect to probe type, connection technology of the probe, measuring range (user configurable), and linearization is carried out by a setup program on the PC. The connection to the PC is established via a USB interface which does not require additional auxiliary voltage. Via the USB interface, the min./max. process value and the min./max. operating temperature recorded by the transmitter can be read and the sensor wiring can be checked online.

The operating status of the transmitter is indicated by a two-color control LED (red/green). The control LED is lit green during malfunction-free operation. A fault such as a probe break will be shown by the corresponding LED signaling.

Type 707050 (dTRANS T05 B)

Type 707051 (dTRANS T05 T)

Block diagram

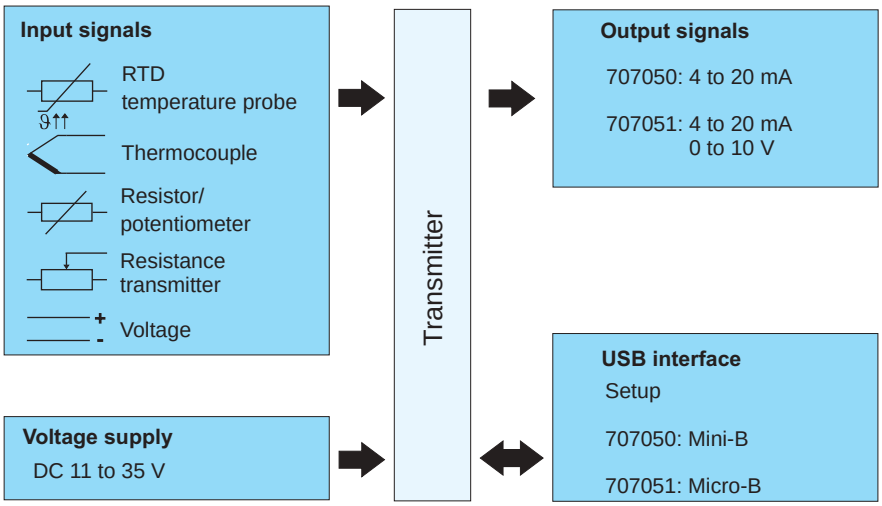

Special features

- Measuring input for RTD temperature probe, thermocouple, resistor/ potentiometer, resistance transmitter, and voltage
- Input and output are electrically isolated
- Control LED (red/green)
- Configuration directly via USB cable without additional auxiliary voltage
- Customer-specific linearization
- Detection of the min./max. process value (drag pointer function including point in time)
- Option to specify the temperature in °F for temperature sensors
- Type 707051 available with screw terminals or spring-cage terminals

JUMO GmbH & Co. KG
Delivery address: Mackenrodtstraße 14
36039 Fulda, Germany
Postal address: 36035 Fulda, Germany
Phone: +49 661 6003-0
Fax: +49 661 6003-607
Email: mail@jumo.net
Internet: www.jumo.net

JUMO Instrument Co. Ltd.
JUMO House
Temple Bank, Riverway
Harlow, Essex CM 20 2DY, UK
Phone: +44 1279 63 55 33
Fax: +44 1279 62 50 29
Email: sales@jumo.co.uk
Internet: www.jumo.co.uk

JUMO Process Control, Inc.
6733 Myers Road
East Syracuse, NY 13057, USA
Phone: +1 315 437 5866
Fax: +1 315 437 5860
Email: info.us@jumo.net
Internet: www.jumousa.com

Technical data

Analog input

All analog inputs are equipped with a digital filter of second order (filter constant adjustable from 0 to 10 s) and have a sampling rate of > 2 measurements per second.

RTD temperature probes

Description	Standard	ITS	Connection type	Measuring range in °C		Measuring accuracy[a]
				Min.	Max.	
Pt100	IEC 60751:2008	ITS-90	Two/three-wire	-100	200	±0.2 K
Pt500			Two/three-wire	-200	850	±0.4 K
Pt1000			Four-wire	-100	200	±0.1 K
$T_K = 3.85 \times 10^{-3}$ 1/K			Four-wire	-200	850	±0.2 K
Pt100	GOST 6651-2009 A.2	ITS-90	Two/three-wire	-100	200	±0.2 K
$T_K = 3.917 \times 10^{-3}$ 1/K			Two/three-wire	-200	850	±0.4 K
			Four-wire	-100	200	±0.15 K
			Four-wire	-200	850	±0.25 K
Pt50			Two/three-wire	-200	850	±0.5 K
$T_K = 3.91 \times 10^{-3}$ 1/K			Four-wire	-200	850	±0.3 K
Ni100	DIN 43760	IPTS-68	Two/three-wire	-60	250	±0.4 K
$T_K = 6.18 \times 10^{-3}$ 1/K			Four-wire	-60	250	±0.2 K
Ni500			Two/three-wire	-60	250	±0.4 K
$T_K = 6.18 \times 10^{-3}$ 1/K			Four-wire	-60	250	±0.2 K
Ni1000			Two/three-wire	-60	250	±0.4 K
$T_K = 6.18 \times 10^{-3}$ 1/K			Four-wire	-60	250	±0.2 K
Ni100	GOST 6651-2009 A.5	ITS-90	Two/three-wire	-60	180	±0.4 K
$T_K = 6.17 \times 10^{-3}$ 1/K			Four-wire	-60	180	±0.2 K
Cu50	GOST 6651-2009 A.3	ITS-90	Two/three-wire	-180	200	±0.5 K
$T_K = 4.28 \times 10^{-3}$ 1/K			Four-wire	-180	200	±0.3 K
Cu100			Two/three-wire	-180	200	±0.4 K
$T_K = 4.28 \times 10^{-3}$ 1/K			Four-wire	-180	200	±0.2 K

[a] The accuracy values refer to the complete measuring range.

Connection type	Two-wire, three-wire, or four-wire circuit
Sensor line resistance	
for three and four-wire circuit	≤ 11 Ω per wire
for two-wire circuit	Measuring resistance + ≤ 22 Ω internal conductor resistance
Sensor current	< 0.3 mA

JUMO GmbH & Co. KG
Delivery address: Mackenrodtstraße 14
36039 Fulda, Germany
Postal address: 36035 Fulda, Germany
Phone: +49 661 6003-0
Fax: +49 661 6003-607
Email: mail@jumo.net
Internet: www.jumo.net

JUMO Instrument Co. Ltd.
JUMO House
Temple Bank, Riverway
Harlow, Essex CM 20 2DY, UK
Phone: +44 1279 63 55 33
Fax: +44 1279 62 50 29
Email: sales@jumo.co.uk
Internet: www.jumo.co.uk

JUMO Process Control, Inc.
6733 Myers Road
East Syracuse, NY 13057, USA
Phone: +1 315 437 5866
Fax: +1 315 437 5860
Email: info.us@jumo.net
Internet: www.jumousa.com

Thermocouples

Designation	Type	Standard	ITS	Measuring range in °C		Measuring accuracy[a]
				Min.	Max.	
Pt13Rh-Pt	R	IEC 584-1	ITS-90	-50	1768	± 0.15 % from +50 °C
Pt10Rh-Pt	S	IEC 584-1	ITS-90	-50	1768	± 0.15 % from +20 °C
Pt30Rh-Pt6Rh	B	IEC 584-1	ITS-90	0	1820	± 0.15 % from +400 °C
Fe-CuNi	J	IEC 584-1	ITS-90	-210	1200	± 0.1 % from -100 °C
Cu-CuNi	T	IEC 584-1	ITS-90	-270	400	± 0.1 % from -150 °C
NiCr-CuNi	E	IEC 584-1	ITS-90	-270	1000	± 0.1 % from -80 °C
NiCr-Ni	K	IEC 584-1	ITS-90	-270	1372	± 0.1 % from -80 °C
NiCrSi-NiSi	N	IEC 584-1	ITS-90	-270	1300	± 0.1 % from -80 °C
Fe-CuNi	L	DIN 43710	IPTS-68	-200	900	± 0.1 %
Cu-CuNi	U	DIN 43710	IPTS-68	-200	600	± 0.1 % from -100 °C
Chromel-Copel (Ni9.5Cr-Cu44Ni)	L	GOST R 8.585-2001	ITS-90	-200	800	± 0.1 % from -80 °C
Chromel-Alumel		GOST R 8.585-2001	ITS-90	-270	1372	± 0.1 % from -80 °C
W5Re-W20Re	A1	GOST R 8.585-2001	ITS-90	0	2500	± 0.15 %
W5Re-W26Re	C	ASTM E230/E230M-11	ITS-90	0	2315	± 0.15 %
W3Re-W25Re	D	ASTM E1751/E1751M-09	ITS-90	0	2315	± 0.25 %
PL II (Platinel[b] II)		ASTM E1751/E1751M-09	ITS-90	0	1395	± 0.15 %

Cold junction	Pt1000 internal or external cold junction; temperature adjustable 0 to 80 °C
Cold junction accuracy	± 1 K

[a] The accuracy values refer to the complete measuring range.
[b] Platinel is a registered trademark of Engelhardt Corp.

Resistance transmitter and resistor/potentiometer

Designation	Measuring range	Measuring accuracy
Resistance transmitter	Up to 10000 Ω	±10 Ω
Resistor/potentiometer	≤ 400 Ω ≥ 400 Ω to ≤ 4000 Ω > 4000Ω to ≤ 10000Ω	± 400 mΩ ± 4 Ω ± 10 Ω
Connection type	Resistance transmitter: three-wire circuit (A = Start, S = Slider, E = End) Resistor/potentiometer: two-wire circuit, three-wire circuit, and four-wire circuit	
Sensor lead resistance	≤ 11 Ω per line for two-wire circuit, three-wire circuit, and four-wire circuit	

Direct voltage

Designation	Measuring range	Accuracy[a]	Input resistance
Input for mV generator	-100 to 1100 mV	±0.05 %	$R_E \geq 1$ MΩ

[a] The accuracy value refers to the complete measuring range.

JUMO GmbH & Co. KG
Delivery address: Mackenrodtstraße 14
36039 Fulda, Germany
Postal address: 36035 Fulda, Germany
Phone: +49 661 6003-0
Fax: +49 661 6003-607
Email: mail@jumo.net
Internet: www.jumo.net

JUMO Instrument Co. Ltd.
JUMO House
Temple Bank, Riverway
Harlow, Essex CM 20 2DY, UK
Phone: +44 1279 63 55 33
Fax: +44 1279 62 50 29
Email: sales@jumo.co.uk
Internet: www.jumo.co.uk

JUMO Process Control, Inc.
6733 Myers Road
East Syracuse, NY 13057, USA
Phone: +1 315 437 5866
Fax: +1 315 437 5860
Email: info.us@jumo.net
Internet: www.jumousa.com

Measuring circuit monitoring

	Type 707050	**Type 707051**
Underrange	Linear drop up to 3.8 mA (According to NAMUR recommendation 43)	Linear drop up to 3.8 mA (According to NAMUR recommendation 43) Linear drop up to -0.12 V
Overrange	Linear drop up to 20.5 mA (According to NAMUR recommendation 43)	Linear drop up to 20.5 mA (According to NAMUR recommendation 43) Linear increase up to 10.31 V
Probe short circuit/probe and open circuit	RTD temperature probe: (configurable) ≤ 3.6 mA or ≥ 21.7 mA Or free setting: 3.6 up to 23 mA	RTD temperature probe: (configurable) ≤ 3.6 mA or ≥ 21.7 mA Or free setting: 3.6 up to 23 mA
		≤ -0.2 V or ≥ 11.0 V Or free setting: -0.25 up to +11.875 V
	Thermocouple: (configurable)[a] ≤ 3.6 mA or ≥ 21.7 mA Or free setting: 3.6 up to 23 mA	Thermocouple: (configurable)[a] ≤ 3.6 mA or ≥ 21.7 mA Or free setting: 3.6 up to 23 mA
		≤ -0.2 V or ≥ 11.0 V Or free setting: -0.25 up to +11.875 V
Current limiting in the event of a probe short circuit or probe break	≤ 23 mA	

[a] For thermocouples and mV generators a probe short-circuit detection is not possible.

Output

	Type 707050	**Type 707051**
Output signal	Load-independent direct current: Free setting: 4 to 20 mA or 20 to 4 mA	Load-independent direct current: Free setting: 4 to 20 mA or 20 to 4 mA
		Voltage signal: Free setting: 0 to 10 V or 10 to 0 V
Electrical isolation Test voltage	Between input and output: Û = 3.75 kV/50 Hz	Between input and output: Û = 1.875 kV/50 Hz
Transmission behavior	Linear, temperature-linear Customer specific Reversion of the output signal	
Step response 0 to 100 %	< 2 s (with filter constant 0 s)	
Switch-on delay	5 s (correct measured value after the supply voltage is applied)	
	Current output	
Load (R_b)	$R_b = (U_b - 11\ V) \div 0.022\ A$	
Load error	≤ ±0.02 %/100 Ω	
Calibration conditions/accuracy	DC 24 V at approx. 22 °C/±0.05 %[a]	
	Voltage output	
Load resistance	≥ 2 kΩ	
Load influence	± 15 mV	
Residual ripple	± 1 % referring to 10 V, 0 to 90 kHz	
Calibration conditions/accuracy	DC 24 V at approx. 22 °C/±0.05 %[b]	

[a] All specifications refer to the measuring range end value of 20 mA

[b] All specifications refer to the measuring range end value of 10 V

JUMO GmbH & Co. KG
Delivery address: Mackenrodtstraße 14
36039 Fulda, Germany
Postal address: 36035 Fulda, Germany
Phone: +49 661 6003-0
Fax: +49 661 6003-607
Email: mail@jumo.net
Internet: www.jumo.net

JUMO Instrument Co. Ltd.
JUMO House
Temple Bank, Riverway
Harlow, Essex CM 20 2DY, UK
Phone: +44 1279 63 55 33
Fax: +44 1279 62 50 29
Email: sales@jumo.co.uk
Internet: www.jumo.co.uk

JUMO Process Control, Inc.
6733 Myers Road
East Syracuse, NY 13057, USA
Phone: +1 315 437 5866
Fax: +1 315 437 5860
Email: info.us@jumo.net
Internet: www.jumousa.com

Interfaces

	Type 707050	**Type 707051**
USB device	To operate the setup program	
Type	USB interface 2.0; Full-speed	
Connection port	Mini-B	Micro-B

Customer-specific linearization

Method	**Characteristics**
Pairs of values	Max. number: 40 Interpolation: linear
Formula	Number of coefficients: 5 Polynomial: 4th order

Voltage supply

	Type 707050	**Type 707051**
Voltage supply (U_b)	DC 11 to 35 V (with reverse voltage protection[a]) Only for operation in SELV, PELV current circuits according to DIN EN 50178	
Voltage supply error	≤ ± 0.01 %/V deviation from 24 V[b]	
Requirement	The device must be equipped with an electrical circuit that meets the requirements of EN 61010-1 with regard to "Limited-energy circuits".	

[a] Prerequisite for use of the voltage output of type 707051 is a voltage supply of at least 15 V

[b] All specifications refer to the measuring range end value of 20 mA

Environmental influences

	Type 707050	**Type 707051**
Operating temperature range	-40 to +85 °C	-10 up to +70 °C
Storage temperature range	-40 to +100 °C	-10 up to +70 °C
Temperature influence		
RTD temperature probes	≤ ±0.005 %/K deviation from 22 °C[a]	
Resistance transmitter	≤ ±0.01 %/K deviation from 22 °C[a]	
Resistance/potentiometer	≤ ±0.01 %/K deviation from 22 °C[a]	
Thermocouple	≤ ±0.005 %/K deviation from 22 °C[a] (plus accuracy of the cold junction)	
Direct current	≤ ±0.01 %/K deviation from 22 °C[a]	
Long-term stability	≤ 0.1 K/year[b] or ≤ 0.05 %/year[c]	
Resistance to climatic conditions		
In terminal head, form B	Rel. humidity ≤ 95 %, with condensation	
Open assembly	Rel. humidity ≤ 95 %, without condensation	
On DIN-rail		Rel. humidity ≤ 95 %, without condensation
Climate class	3K8H acc. to DIN EN 60721-3-3	3K8H acc. to DIN EN 60721-3-3
Vibration resistance		
DIN EN 60068-2-6	Max. 2 g at 10 to 2000 Hz	Max. 2 g at 10 to 55 Hz
DIN EN 60068-2-27	Shock; 10 g/6 ms	Shock; 10 g/6 ms
Germanischer Lloyd	Characteristic line 2	-
Electromagnetic compatibility (EMC)	According to DIN EN 61326-1	
Interference emission	Class B	
Interference immunity	Industrial requirement	

JUMO GmbH & Co. KG
Delivery address: Mackenrodtstraße 14
36039 Fulda, Germany
Postal address: 36035 Fulda, Germany
Phone: +49 661 6003-0
Fax: +49 661 6003-607
Email: mail@jumo.net
Internet: www.jumo.net

JUMO Instrument Co. Ltd.
JUMO House
Temple Bank, Riverway
Harlow, Essex CM 20 2DY, UK
Phone: +44 1279 63 55 33
Fax: +44 1279 62 50 29
Email: sales@jumo.co.uk
Internet: www.jumo.co.uk

JUMO Process Control, Inc.
6733 Myers Road
East Syracuse, NY 13057, USA
Phone: +1 315 437 5866
Fax: +1 315 437 5860
Email: info.us@jumo.net
Internet: www.jumousa.com

	Type 707050	**Type 707051**
IP protection type		
In terminal head, form B	IP54/IP65 (depending on the version)	
Open assembly	IP00	
On DIN-rail		IP20

[a] All specifications refer to the measuring range end value of 20 mA or 10 V.

[b] Under calibration conditions.

[c] % refers to the set measuring span. The greater value of the long-term stability applies.

Case

	Type 707050	**Type 707051**
Material	Polycarbonate UL 94 V2 (grouted)	Polybutylene terephthalate UL 94 V0
Terminal type	Screw terminals:	Screw terminals:
Wire type	Rigid and flexible wires ≤ 1.75 mm^2; Max. torque 0.6 Nm	Rigid and flexible wires 0.2 to 2.5 mm^2 AWG/kcmil min. 26, max. 12 Stripping length 12 mm Torque 0.5 to 0.6 Nm
		Spring-cage terminals Rigid and flexible wires 0.2 to 2.5 mm^2 AWG/kcmil min. 26, max. 12 Stripping length 8 mm
Assembly type	In terminal head, form B (DIN EN 50446); In the surface-mounted case (see accessories); In the control cabinet (mounting element required)	On DIN rail TH 35-7.5 Or TH 35-15 (DIN EN 60715);
Installation position	Any	
Weight	~ 35 g	~ 50 g

JUMO GmbH & Co. KG
Delivery address: Mackenrodtstraße 14
36039 Fulda, Germany
Postal address: 36035 Fulda, Germany
Phone: +49 661 6003-0
Fax: +49 661 6003-607
Email: mail@jumo.net
Internet: www.jumo.net

JUMO Instrument Co. Ltd.
JUMO House
Temple Bank, Riverway
Harlow, Essex CM 20 2DY, UK
Phone: +44 1279 63 55 33
Fax: +44 1279 62 50 29
Email: sales@jumo.co.uk
Internet: www.jumo.co.uk

JUMO Process Control, Inc.
6733 Myers Road
East Syracuse, NY 13057, USA
Phone: +1 315 437 5866
Fax: +1 315 437 5860
Email: info.us@jumo.net
Internet: www.jumousa.com

Setup program

The transmitter is configured on the PC with the setup program. The connection between transmitter and PC is established via a USB cable. The transmitter interface is a USB port of the Mini-B type (707050) or of the Micro-B type (707051). It supports standard 2.0 "Full-speed". Once configuration of the transmitter has been completed make sure that the attached hinged-on lid is back on the transmitter's USB interface.

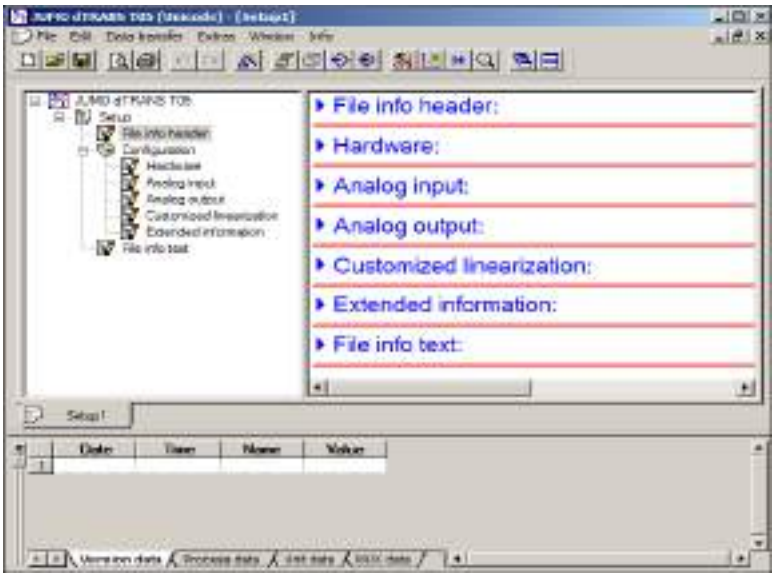

Configurable parameters

Sensor type	
Connection type two, three, or four-wire circuit for RTD temperature probe or resistance/potentiometer	
Linearization	
Customer-specific linearization	
Noise suppression	
Sensor factor for thermocouple / RTD temperature probe	
Lead wire resistance for two-wire circuit	
External or internal cold junction for thermocouple	
Scaling	
Digital filter	
Offset	
Unit	
Behavior in the event of a probe break/short-circuit	
Output signal increasing or decreasing (reversion)	
Output functions, current Type 705050 and type 705051	4 to 20 mA 4 to 20 mA scalable (start/end) Constant current source
Output functions, voltage Only type 705051	0 to 10 V 0 to 10 V scalable (start/end) Constant voltage source
TAG number (10-digit) and description (20-digit)	
Installation date	
Version, process, and device data of the transmitter can be displayed	

JUMO GmbH & Co. KG
Delivery address: Mackenrodtstraße 14
36039 Fulda, Germany
Postal address: 36035 Fulda, Germany
Phone: +49 661 6003-0
Fax: +49 661 6003-607
Email: mail@jumo.net
Internet: www.jumo.net

JUMO Instrument Co. Ltd.
JUMO House
Temple Bank, Riverway
Harlow, Essex CM 20 2DY, UK
Phone: +44 1279 63 55 33
Fax: +44 1279 62 50 29
Email: sales@jumo.co.uk
Internet: www.jumo.co.uk

JUMO Process Control, Inc.
6733 Myers Road
East Syracuse, NY 13057, USA
Phone: +1 315 437 5866
Fax: +1 315 437 5860
Email: info.us@jumo.net
Internet: www.jumousa.com

Hardware and software requirements

A PC with USB interface is required to operate the setup program. Details about supported operating systems (Microsoft® Windows®), required hard disk drive space, and memory can be found under information about the setup program on the manufacturer's website (search for 707050, in the search results click the link to the product, go to software, and look for further information about the setup program).

Connection diagram

The connection diagram in the data sheet provides preliminary information about the connection possibilities. Only use the operating manual for the electrical connection. The knowledge and the correct technical execution of the safety information/instructions contained in these documents are a prerequisite for installation, electrical connection, and startup as well as for safety during operation.

Connection example dTRANS T05 B

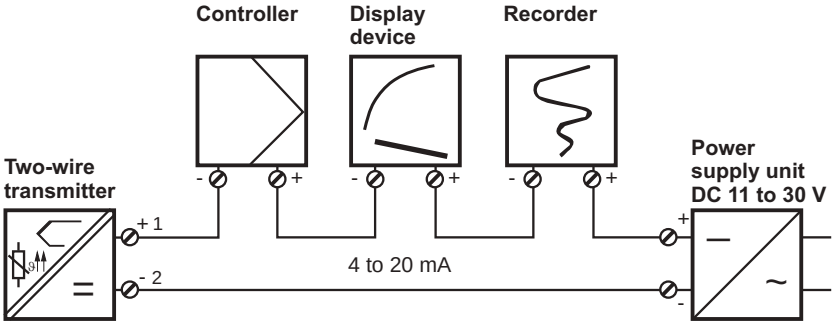

Terminal assignment and dimensions (mm) dTRANS T05 B

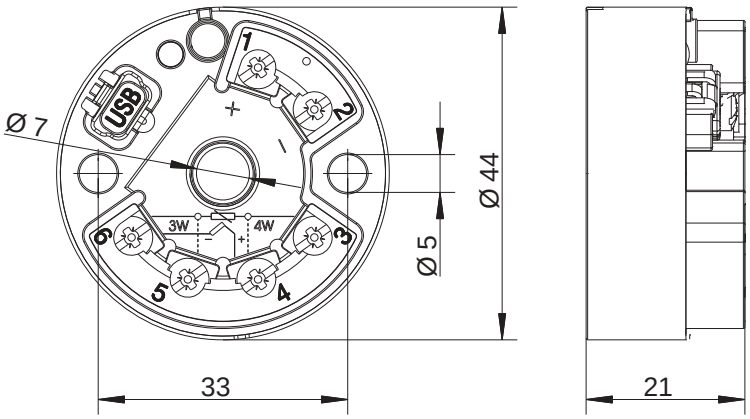

JUMO GmbH & Co. KG
Delivery address: Mackenrodtstraße 14
36039 Fulda, Germany
Postal address: 36035 Fulda, Germany
Phone: +49 661 6003-0
Fax: +49 661 6003-607
Email: mail@jumo.net
Internet: www.jumo.net

JUMO Instrument Co. Ltd.
JUMO House
Temple Bank, Riverway
Harlow, Essex CM 20 2DY, UK
Phone: +44 1279 63 55 33
Fax: +44 1279 62 50 29
Email: sales@jumo.co.uk
Internet: www.jumo.co.uk

JUMO Process Control, Inc.
6733 Myers Road
East Syracuse, NY 13057, USA
Phone: +1 315 437 5866
Fax: +1 315 437 5860
Email: info.us@jumo.net
Internet: www.jumousa.com

Type 707050		
Connection for	**Terminal assignment**	
Voltage supply Type 707050 DC 11 to 35 V Current output 4 to 20 mA	$R_B = (U_b - 11\ V) \div 22\ mA$ R_B = Load resistance U_b = Voltage supply	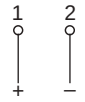
Analog inputs		
RTD temperature probe two-wire circuit	$R_L \leq 11\ \Omega$ R_L = Lead resistance per wire	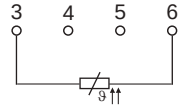
RTD temperature probe three-wire circuit (3W)	$R_L \leq 11\ \Omega$ R_L = Lead resistance per wire	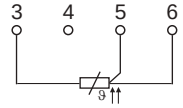
RTD temperature probe four-wire circuit (4W)	$R_L \leq 11\ \Omega$ R_L = Lead resistance per wire	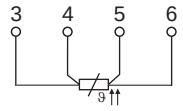
Thermocouple		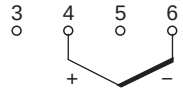
Resistor/potentiometer two-wire circuit	$R_L \leq 11\ \Omega$ R_L = Lead resistance per wire	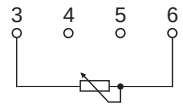
Resistor/potentiometer three-wire circuit (3W)	$R_L \leq 11\ \Omega$ R_L = Lead resistance per wire	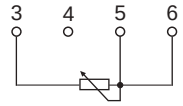
Resistor/potentiometer four-wire circuit (4W)	$R_L \leq 11\ \Omega$ R_L = Lead resistance per wire	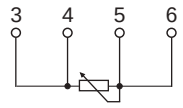
Resistance transmitter	E = End S = Slider A = Start	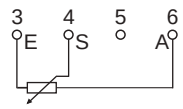
Voltage 0 to 1 V		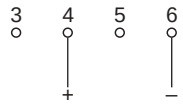
Interface		
USB device	Mini-B, standard (5-pin)	

JUMO GmbH & Co. KG
Delivery address: Mackenrodtstraße 14
36039 Fulda, Germany
Postal address: 36035 Fulda, Germany
Phone: +49 661 6003-0
Fax: +49 661 6003-607
Email: mail@jumo.net
Internet: www.jumo.net

JUMO Instrument Co. Ltd.
JUMO House
Temple Bank, Riverway
Harlow, Essex CM 20 2DY, UK
Phone: +44 1279 63 55 33
Fax: +44 1279 62 50 29
Email: sales@jumo.co.uk
Internet: www.jumo.co.uk

JUMO Process Control, Inc.
6733 Myers Road
East Syracuse, NY 13057, USA
Phone: +1 315 437 5866
Fax: +1 315 437 5860
Email: info.us@jumo.net
Internet: www.jumousa.com

Connection example dTRANS T05 T

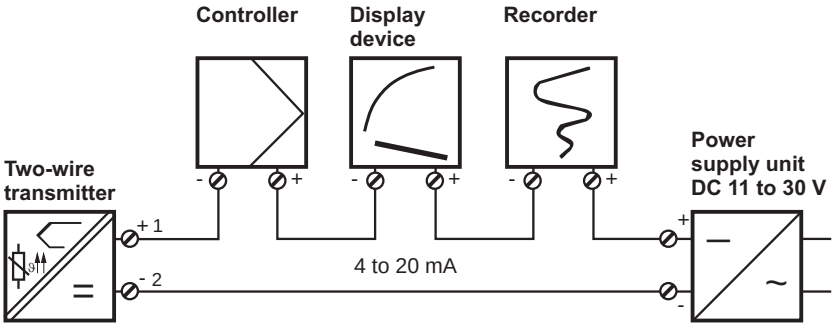

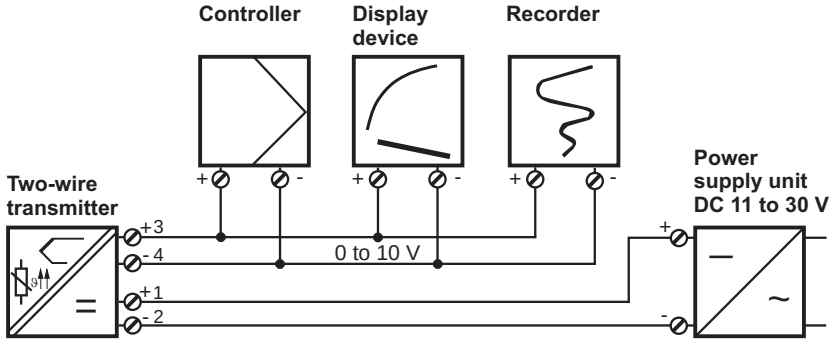

Connection assignment and dimensions (mm) dTRANS T05 T

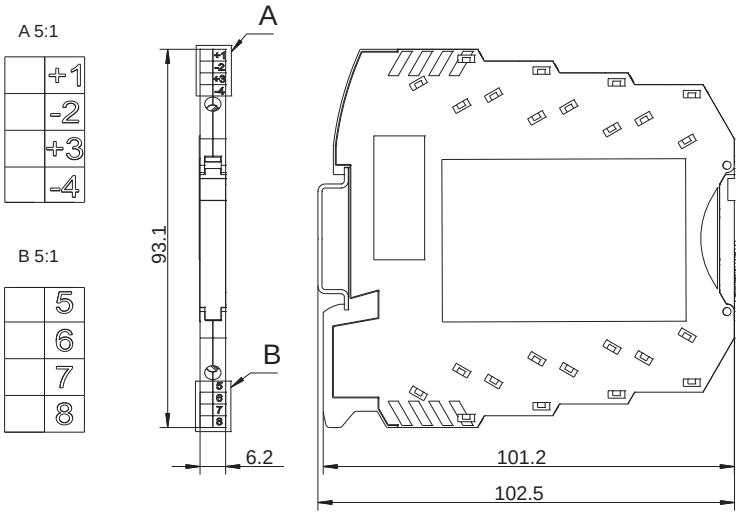

This figure shows type 707051 installed on a DIN rail TH 35-7.5. The specifications concerning dimensions only valid for the installation on this DIN rail and change accordingly if a DIN rail TH 35-15 is used.

JUMO GmbH & Co. KG
Delivery address: Mackenrodtstraße 14
36039 Fulda, Germany
Postal address: 36035 Fulda, Germany
Phone: +49 661 6003-0
Fax: +49 661 6003-607
Email: mail@jumo.net
Internet: www.jumo.net

JUMO Instrument Co. Ltd.
JUMO House
Temple Bank, Riverway
Harlow, Essex CM 20 2DY, UK
Phone: +44 1279 63 55 33
Fax: +44 1279 62 50 29
Email: sales@jumo.co.uk
Internet: www.jumo.co.uk

JUMO Process Control, Inc.
6733 Myers Road
East Syracuse, NY 13057, USA
Phone: +1 315 437 5866
Fax: +1 315 437 5860
Email: info.us@jumo.net
Internet: www.jumousa.com

Type 707051		
Connection for	**Terminal assignment**	
Voltage supply Type 707051 DC 11 to 35 V Current output 4 to 20 mA	$R_B = (U_b - 11\ V) \div 22\ mA$ R_B = Load resistance U_b = Voltage supply	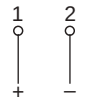
Voltage output 0 to 10 V		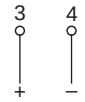
Analog inputs		
RTD temperature probe two-wire circuit	$R_L \leq 11\ \Omega$ R_L = Lead resistance per wire	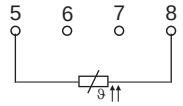
RTD temperature probe three-wire circuit (3W)	$R_L \leq 11\ \Omega$ R_L = Lead resistance per wire	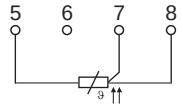
RTD temperature probe four-wire circuit (4W)	$R_L \leq 11\ \Omega$ R_L = Lead resistance per wire	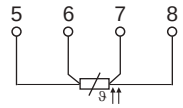
Thermocouple		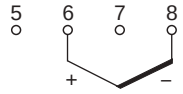
Resistor/potentiometer two-wire circuit	$R_L \leq 11\ \Omega$ R_L = Lead resistance per wire	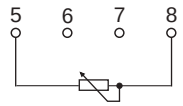
Resistor/potentiometer three-wire circuit (3W)	$R_L \leq 11\ \Omega$ R_L = Lead resistance per wire	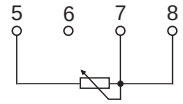
Resistor/potentiometer four-wire circuit (4W)	$R_L \leq 11\ \Omega$ R_L = Lead resistance per wire	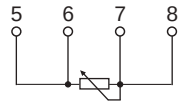
Resistance transmitter	E = End S = Slider A = Start	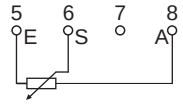
Voltage 0 to 1 V		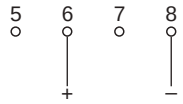
Interface		
USB device	Micro-B, standard (5-pin)	

JUMO GmbH & Co. KG
Delivery address: Mackenrodtstraße 14
36039 Fulda, Germany
Postal address: 36035 Fulda, Germany
Phone: +49 661 6003-0
Fax: +49 661 6003-607
Email: mail@jumo.net
Internet: www.jumo.net

JUMO Instrument Co. Ltd.
JUMO House
Temple Bank, Riverway
Harlow, Essex CM 20 2DY, UK
Phone: +44 1279 63 55 33
Fax: +44 1279 62 50 29
Email: sales@jumo.co.uk
Internet: www.jumo.co.uk

JUMO Process Control, Inc.
6733 Myers Road
East Syracuse, NY 13057, USA
Phone: +1 315 437 5866
Fax: +1 315 437 5860
Email: info.us@jumo.net
Internet: www.jumousa.com

Order details

			(1)	**Basic type**
		707050		dTRANS T05 B – Two-wire transmitter for installation in terminal head, form B
		707051		dTRANS T05 T – Two-wire transmitter for mounting on DIN-rail
			(2)	**Configuration**
x	x	8		Factory-set (0 to 100 °C, Pt100 three-wire circuit, 4 to 20 mA)
x	x	9		Customer-specific setting
			(3)	**Electrical connection type**
x	x	06		Screw terminals
	x	07		Spring-cage terminals

	(1)		(2)		(3)
Order code		/		-	
Order example	707050	/	8	-	06

Scope of delivery

1 transmitter in the version ordered For type 707050: including fastening material (2 screws, 2 pressure springs, and 2 retaining washers)
1 operating manual

Accessories

Description	**Part no.**
Setup program on CD-ROM, multilingual	00574959
USB cable, A-connector to Mini-B connector, length 3 m, for type 707050	00506252
USB cable, A-connector to Micro-B connector, length 3 m, for type 707051	00616250
USB cable set (mini/micro USB), length 3 m	00639360
Mounting element for mounting of type 707050 on mounting rail	00352463
Screw-on end clamp for mounting rail	00528648

JUMO GmbH & Co. KG
Delivery address: Mackenrodtstraße 14
36039 Fulda, Germany
Postal address: 36035 Fulda, Germany
Phone: +49 661 6003-0
Fax: +49 661 6003-607
Email: mail@jumo.net
Internet: www.jumo.net

JUMO Instrument Co. Ltd.
JUMO House
Temple Bank, Riverway
Harlow, Essex CM 20 2DY, UK
Phone: +44 1279 63 55 33
Fax: +44 1279 62 50 29
Email: sales@jumo.co.uk
Internet: www.jumo.co.uk

JUMO Process Control, Inc.
6733 Myers Road
East Syracuse, NY 13057, USA
Phone: +1 315 437 5866
Fax: +1 315 437 5860
Email: info.us@jumo.net
Internet: www.jumousa.com

JUMO Wtrans B

Programmable head transmitter with wireless data transmission

Brief description

The Wtrans B head transmitter with wireless data transmission is used in conjunction with a Wtrans receiver for stationary or mobile acquisition of temperatures with RTD temperature probes or thermocouples. Alternatively, resistances of up to 10 kΩ or voltages of up to 50 mV and up to 20 mA using external shunt currents can be measured. Customer-specific linearization possible.

The measured values are transmitted wirelessly to the receiver of the Wtrans measuring system. The measured values are displayed on the receiver and are available in digital format on the RS485 interface and as analog outputs. Alternatively, different alarms can be signaled with two relay outputs.

This head transmitter, designed for industrial applications, comprises a transmitter with integrated transmission unit and an antenna-battery housing. The transmitter is suitable for mounting in form B terminal heads and has an ambient temperature range of -30 to +85 °C. Installation in customer-specific terminal heads is also possible. The antenna-battery housing is connected to the terminal head with a screw connection (M20 × 1.5).

The radio frequency of the Wtrans measuring system is 868.4 MHz. This frequency is largely impervious to external interference and allows data to be transmitted even in harsh industrial environments. When using the antenna holder for wall mounting with the 3 m antenna cable for the receiver, the open air range is 300 m.

A 3.6 V, 2.2 Ah (size AA) lithium battery is used for the head transmitter voltage supply.

A setup program is available as an accessory for easy configuration and parameterization of the head transmitter and the Wtrans receiver on a laptop/PC. The OnlineChart function can be used optionally to record the measured values on a PC.

Type 707060/...

Block diagram

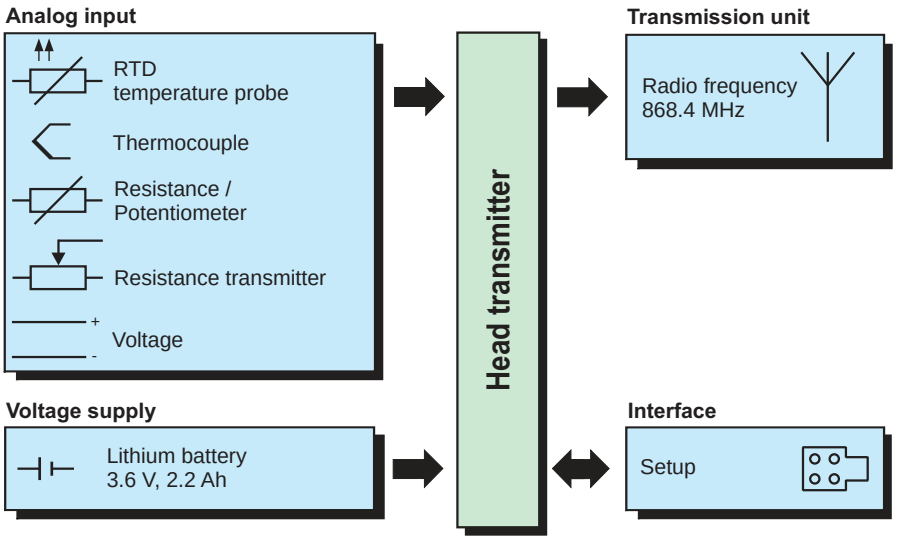

Special features

- Radio frequency 868.4 MHz
- Measurement input for RTD temperature probe, thermocouple, resistor/potentiometer, resistance transmitter, and voltage
- Configurable transmitter detection
- Battery status monitoring
- Easy battery change
- Configurable via setup program
- Customer-specific linearization (value pairs in tabular form or polynomials of the fourth order), can be configured on the receiver
- OnlineChart of the measured values via setup program and receiver

JUMO GmbH & Co. KG
Delivery address: Mackenrodtstraße 14
36039 Fulda, Germany
Postal address: 36035 Fulda, Germany
Phone: +49 661 6003-0
Fax: +49 661 6003-607
Email: mail@jumo.net
Internet: www.jumo.net

JUMO Instrument Co. Ltd.
JUMO House
Temple Bank, Riverway
Harlow, Essex CM 20 2DY, UK
Phone: +44 1279 63 55 33
Fax: +44 1279 62 50 29
Email: sales@jumo.co.uk
Internet: www.jumo.co.uk

JUMO Process Control, Inc.
6733 Myers Road
East Syracuse, NY 13057, USA
Phone: +1 315 437 5866
Fax: +1 315 437 5860
Email: info.us@jumo.net
Internet: www.jumousa.com

JUMO Wtrans

As well as the programmable head transmitter 707060, the JUMO Wtrans series also includes receivers 902931/..., transmitters 402060/..., 902928/... and 902930/...

JUMO Wtrans series

Type	Description	Data sheet
JUMO Wtrans receiver	Universal receiver for JUMO wireless measuring probes (Voltage supply AC 110 to 240 V or AC/DC 20 to 30 V)	902931
JUMO Wtrans T	Transmitter RTD temperature probe with wireless data transmission (for universal receivers as of software version 01.01) • as insertion or mineral-insulated RTD temperature probe • for various ambient and operating temperatures • with fixed and flexible protection tubes • with plug connector M12 × 1 for RTD temperature probes • with plug connector M12 × 1 for RTD temperature probes with connecting cable • with ATEX approval	902930
JUMO Wtrans E01	Transmitter Measuring probe for humidity, temperature, and CO_2 with wireless data transmission (for universal receivers as of software version 05.01)	902928
JUMO Wtrans B	Transmitter Programmable head transmitter with wireless data transmission (for universal receivers as of software version 03.01)	707060
JUMO Wtrans p	Transmitter Pressure transmitter with wireless data transmission (for universal receivers as of software version 04.01)	402060

JUMO GmbH & Co. KG
Delivery address: Mackenrodtstraße 14
36039 Fulda, Germany
Postal address: 36035 Fulda, Germany
Phone: +49 661 6003-0
Fax: +49 661 6003-607
Email: mail@jumo.net
Internet: www.jumo.net

JUMO Instrument Co. Ltd.
JUMO House
Temple Bank, Riverway
Harlow, Essex CM 20 2DY, UK
Phone: +44 1279 63 55 33
Fax: +44 1279 62 50 29
Email: sales@jumo.co.uk
Internet: www.jumo.co.uk

JUMO Process Control, Inc.
6733 Myers Road
East Syracuse, NY 13057, USA
Phone: +1 315 437 5866
Fax: +1 315 437 5860
Email: info.us@jumo.net
Internet: www.jumousa.com

Technical data

Analog input

RTD temperature probe

Designation	Standard	Measuring range	Measuring accuracy
Pt100 (TK value = 3.85 × 10^{-3} 1/K)	DIN EN 60751	-100 to +200 °C -200 to +600 °C	±0.1 K ±0.2 K
Pt500 (TK value = 3.85 × 10^{-3} 1/K)	DIN EN 60751	-100 to +200 °C -200 to +600 °C	±0.1 K ±0.2 K
Pt1000 (TK value = 3.85 × 10^{-3} 1/K)	DIN EN 60751	-100 to +200 °C -200 to +600 °C	±0.1 K ±0.2 K
Ni100 (TK value = 6.18 × 10^{-3} 1/K)	DIN 43760	-60 to +250 °C	±0.2 K
Ni500 (TK value = 6.18 × 10^{-3} 1/K)	DIN 43760	-60 to +150 °C	±0.2 K
Ni1000 (TK value = 6.18 × 10^{-3} 1/K)	DIN 43760	-60 to +150 °C	±0.2 K
Pt100 (TK value = 3.917 × 10^{-3} 1/K)	JIS 1604	-100 to +200 °C -200 to +600 °C	±0.1 K ±0.2 K
Pt50 (TK value = 3.91 × 10^{-3} 1/K)	ST RGW 1057 1985	-200 to +600 °C	±0.2 K
Pt100 (TK value = 3.91 × 10^{-3} 1/K)	GOST 6651-94 A.1	-100 to +200 °C -200 to +600 °C	±0.1 K ±0.2 K
Cu50 (TK value = 4.26 × 10^{-3} 1/K)	GOST 6651-94 A.4	-50 to +200 °C	±0.2 K
Cu100 (TK value = 4.26 × 10^{-3} 1/K)	GOST 6651-94 A.4	-50 to +200 °C	±0.2 K
Connection type		2-wire or 3-wire circuit	
Sensor current		< 0.5 mA	
Lead compensation		Not required for 3-wire circuit (max. admissible 11 Ω per line), max. adjustable line resistance for 2-wire circuit: 22 Ω	

JUMO GmbH & Co. KG
Delivery address: Mackenrodtstraße 14
36039 Fulda, Germany
Postal address: 36035 Fulda, Germany
Phone: +49 661 6003-0
Fax: +49 661 6003-607
Email: mail@jumo.net
Internet: www.jumo.net

JUMO Instrument Co. Ltd.
JUMO House
Temple Bank, Riverway
Harlow, Essex CM 20 2DY, UK
Phone: +44 1279 63 55 33
Fax: +44 1279 62 50 29
Email: sales@jumo.co.uk
Internet: www.jumo.co.uk

JUMO Process Control, Inc.
6733 Myers Road
East Syracuse, NY 13057, USA
Phone: +1 315 437 5866
Fax: +1 315 437 5860
Email: info.us@jumo.net
Internet: www.jumousa.com

Thermocouples

Designation	Standard	Measuring range	Measuring accuracy[a]
Fe-CuNi "L"	DIN 43710	-200 to +900 °C	±0.1 %
Fe-CuNi "J"	DIN EN 60584	-210 to +1200 °C	±0.1 % from -100 °C
Cu-CuNi "U"	DIN 43710	-200 to +600 °C	±0.1 % from -100 °C
Cu-CuNi "T"	DIN EN 60584	-270 to +400 °C	±0.1 % from -150 °C
NiCr-Ni "K"	DIN EN 60584	-270 to +1372 °C	±0.1 % from -80 °C
NiCr-CuNi "E"	DIN EN 60584	-270 to +1000 °C	±0.1 % from -80 °C
NiCrSi-NiSi "N"	DIN EN 60584	-270 to +1300 °C	±0.1 % from -80 °C
Pt10Rh-Pt "S"	DIN EN 60584	-50 to +1768 °C	±0.15 % from 20 °C
Pt13Rh-Pt "R"	DIN EN 60584	-50 to +1768 °C	±0.15 % from 50 °C
Pt30Rh-Pt6Rh "B"	DIN EN 60584	0 to 1820 °C	±0.15 % from 400 °C
W5Re-W26Re "C"		0 to 2320 °C	±0.15 %
W3Re-W25Re "D"		0 to 2495 °C	±0.25 %
W3Re-W26Re		0 to 2400 °C	±0.15 %
Chromel®-Copel®		-200 to +800 °C	±0.1 % from -80 °C
Chromel®-Alumel®		-200 to +1372 °C	±0.1 % from -80 °C
PLII (Platinel II)		0 to 1395 °C	±0.15 %
MoRe5-MoRe41		0 to 2000 °C	±0.2 %
Cold junction		Pt1000 internal	
Cold junction accuracy		±1 K	

[a] All accuracy values in % refer to the maximum measuring range.

Resistance/potentiometer

Designation	Measuring range	Measuring accuracy[a]
Resistance/potentiometer Linearization: 0 to 100 %	> 50 to ≤ 400 Ω > 400 to ≤ 4000 Ω > 4000 to ≤ 10000 Ω	±400 mΩ ±4 Ω ±10 Ω
Resistance/potentiometer Linearization: resistance in Ω	> 50 to ≤ 10000 Ω	±0.1 %
Connection type	2-wire or 3-wire circuit	
Lead compensation	Not required for 3-wire circuit (max. admissible 11 Ω per line), max. adjustable line resistance for 2-wire circuit: 22 Ω	

[a] All accuracy values in % refer to the maximum measuring range.

Resistance transmitter

Designation	Measuring range	Measuring accuracy
Resistance transmitter	> 50 to ≤ 400 Ω > 400 to ≤ 4000 Ω > 4000 to ≤ 10000 Ω	±400 mΩ ±4 Ω ±10 Ω
Connection type	3-wire connection	
Condition	$R_e + R_a + R_s \leq 10000\ \Omega$ and $R_e + R_a \leq 1/3\ R_s$	

Voltage

Designation	Measuring range	Measuring accuracy[a]
Voltage	0 to 50 mV	±0.1 %

[a] All accuracy values in % refer to the maximum measuring range.

JUMO GmbH & Co. KG
Delivery address: Mackenrodtstraße 14
36039 Fulda, Germany
Postal address: 36035 Fulda, Germany
Phone: +49 661 6003-0
Fax: +49 661 6003-607
Email: mail@jumo.net
Internet: www.jumo.net

JUMO Instrument Co. Ltd.
JUMO House
Temple Bank, Riverway
Harlow, Essex CM 20 2DY, UK
Phone: +44 1279 63 55 33
Fax: +44 1279 62 50 29
Email: sales@jumo.co.uk
Internet: www.jumo.co.uk

JUMO Process Control, Inc.
6733 Myers Road
East Syracuse, NY 13057, USA
Phone: +1 315 437 5866
Fax: +1 315 437 5860
Email: info.us@jumo.net
Internet: www.jumousa.com

Measuring circuit monitoring

Measuring probe	Out of range detection	Probe/cable short circuit detection	Wire break detection
Thermocouple	Yes/Yes	No	Yes
RTD temperature probe	Yes/Yes	Yes	Yes
Resistance/potentiometer	Yes/Yes	Yes	Yes
Resistance transmitter	No/No	No	No
Voltage	Yes/Yes	No	Yes

Output (radio transmission)

Transmitter detection (transmitter ID)	Max. five-digit ID, default setting, customer-specific configuration possible
Transmission interval	Adjustable from 1 to 3600 s (default setting 15 s)
Radio frequency	868.4 MHz (Europe)
Transmission power	< +10 dBm
Open air range	Max. 300 m when using the receiver antenna holder for wall mounting, and 3 m antenna cable; when installing the antenna directly on the receiver, the user must take approx. 40 % less range into consideration
Output signal Thermocouple RTD temperature probe Resistance/potentiometer Resistance transmitter Voltage	 Voltage (mV) Resistance (Ω) Percent (%) or resistance (Ω) Percent (%) Voltage (mV)
Configuration	With setup program
Configurable parameters	Transmitter ID (max. 5-digit ID) and transmission interval

Electrical data

Voltage supply Lithium battery	 Rated voltage: 3.6 V, rated capacity: 2.2 Ah; size AA
Operating life	Approx. 1 year with the factory-set values (transmission interval = 15 s) and at room temperature; shorter transmission interval and high or low ambient temperature reduce the battery operating life.
Battery change	Only use the lithium battery that is available as an accessory

Environmental influences

Transmitter in the terminal head, form B with antenna-battery housing

Ambient temperature range	-30 to +85 °C
Storage temperature range; storage humidity	-40 to +85 °C; rel. humidity ≤ 95 %
Temperature influence[a] Thermocouple RTD temperature probe Resistance/potentiometer Resistance transmitter Voltage	 ≤ ±0.005 %/K deviation 22 °C plus accuracy of the cold junction ≤ ±0.005 %/K deviation from 22 °C ≤ ±0.01 %/K deviation from 22 °C ≤ ±0.01 %/K deviation from 22 °C ≤ ±0.005 %/K deviation from 22 °C
Climate class	10 cycles at 10 °C / 80 °C, according to IEC 68-2-30, rel. humidity 95 %, during operation
Vibration resistance	According to GL characteristic line 2
Admissible mechanical shock resistance	10 g for 6 ms, DIN IEC 68-2.29
Electromagnetic compatibility (EMC)	DIN EN 61326-1

JUMO GmbH & Co. KG
Delivery address: Mackenrodtstraße 14
36039 Fulda, Germany
Postal address: 36035 Fulda, Germany
Phone: +49 661 6003-0
Fax: +49 661 6003-607
Email: mail@jumo.net
Internet: www.jumo.net

JUMO Instrument Co. Ltd.
JUMO House
Temple Bank, Riverway
Harlow, Essex CM 20 2DY, UK
Phone: +44 1279 63 55 33
Fax: +44 1279 62 50 29
Email: sales@jumo.co.uk
Internet: www.jumo.co.uk

JUMO Process Control, Inc.
6733 Myers Road
East Syracuse, NY 13057, USA
Phone: +1 315 437 5866
Fax: +1 315 437 5860
Email: info.us@jumo.net
Internet: www.jumousa.com

Interference emission	Class B - household and small businesses -
Interference immunity	Industrial requirements
Radio frequency spectrum	ETSI EN 300 220-1 and ETSI EN 300 220-2

[a] All accuracy values in % refer to the maximum measuring range.

Housing

Transmitters

Type	Plastic housing to be installed in terminal head, form B
Material	Polycarbonate
Flammability class	UL 94 V2
Dimensions	
Diameter	44 mm
Height with/without connectors	31 mm / 27 mm
Protection type	IP00: With open installation IP65: With installation in suitable terminal head, form B
Connections	
Sensor	3-pin connection terminal RM 5 mm, conductor cross-section 1.5 mm²
Antenna	SMB connector
Voltage supply	2-pin multi-pin connector RM 2.54 mm
Setup	4-pin connector
Weight	Approx. 35 g

Antenna battery housing

Type	Plastic housing with M20 × 1.5 thread for terminal head, form B
Material	Polyetherimide
Flammability class	UL 94 HB or UL 94 V-0
Dimensions	
Diameter	30 mm
Height	115 mm
Protection type	IP65, according to DIN EN 60529
Connection	
Antenna	SMB inlet, 50 Ω
Battery connection	2-pin connector RM 2.54 mm
Installation position	Preferably vertical (optimum alignment to the receiver antenna)
Weight (including battery)	Approx. 80 g

JUMO GmbH & Co. KG
Delivery address: Mackenrodtstraße 14
36039 Fulda, Germany
Postal address: 36035 Fulda, Germany
Phone: +49 661 6003-0
Fax: +49 661 6003-607
Email: mail@jumo.net
Internet: www.jumo.net

JUMO Instrument Co. Ltd.
JUMO House
Temple Bank, Riverway
Harlow, Essex CM 20 2DY, UK
Phone: +44 1279 63 55 33
Fax: +44 1279 62 50 29
Email: sales@jumo.co.uk
Internet: www.jumo.co.uk

JUMO Process Control, Inc.
6733 Myers Road
East Syracuse, NY 13057, USA
Phone: +1 315 437 5866
Fax: +1 315 437 5860
Email: info.us@jumo.net
Internet: www.jumousa.com

Connection elements and connectors

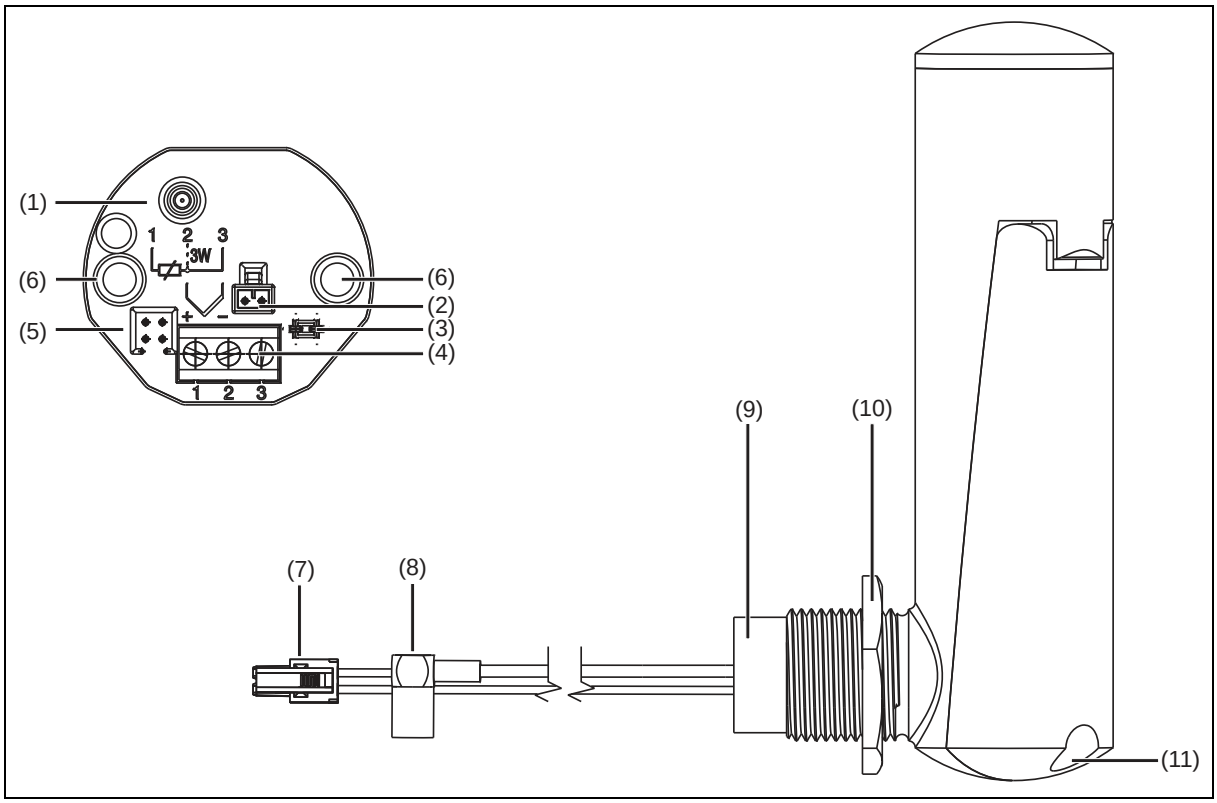

(1) SMB antenna connector (antenna connection)
(2) Voltage supply connector (battery connection)
(3) Cable guide for antenna cable and voltage supply
(4) Sensor connection
(5) Setup connector
(6) Fastening holes for installation in the terminal head, form B
(7) Voltage supply socket (battery connection)
(8) SMB antenna socket (antenna connection)
(9) Seal
(10) Locknut
(11) Battery lid screw

JUMO GmbH & Co. KG
Delivery address: Mackenrodtstraße 14
36039 Fulda, Germany
Postal address: 36035 Fulda, Germany
Phone: +49 661 6003-0
Fax: +49 661 6003-607
Email: mail@jumo.net
Internet: www.jumo.net

JUMO Instrument Co. Ltd.
JUMO House
Temple Bank, Riverway
Harlow, Essex CM 20 2DY, UK
Phone: +44 1279 63 55 33
Fax: +44 1279 62 50 29
Email: sales@jumo.co.uk
Internet: www.jumo.co.uk

JUMO Process Control, Inc.
6733 Myers Road
East Syracuse, NY 13057, USA
Phone: +1 315 437 5866
Fax: +1 315 437 5860
Email: info.us@jumo.net
Internet: www.jumousa.com

Connection diagram

The connection diagram in the data sheet provides preliminary information about the connection options. For the electrical connection, only use the installation instructions or the operating manual. The knowledge and the correct technical compliance with the safety information and warnings contained in these documents are mandatory for mounting, electrical connection, and startup as well as for safety during operation.

Voltage supply

Connection	Connec-tor	Terminals	Symbol and terminal designation
Lithium battery, DC 3.6 V	2		

Analog input

Connection	Connec-tor	Terminals	Symbol and terminal designation
RTD temperature probe 2-wire circuit	4	1 and 3	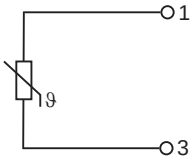
RTD temperature probe 3-wire circuit	4	1 to 3	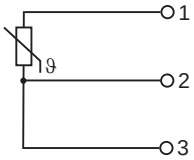
Thermocouple	4	2 and 3	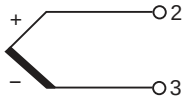
Resistance/potentiometer 2-wire circuit	4	1 and 3	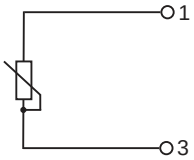
Resistance/potentiometer 3-wire circuit	4	1 to 3	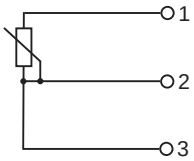
Resistance transmitter A = Start S = Slider E = End	4	1 to 3	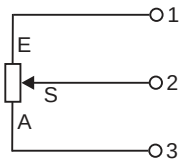
Voltage (0 to 50 mV)	4	2 and 3	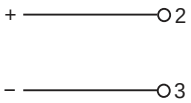

JUMO GmbH & Co. KG
Delivery address: Mackenrodtstraße 14
36039 Fulda, Germany
Postal address: 36035 Fulda, Germany
Phone: +49 661 6003-0
Fax: +49 661 6003-607
Email: mail@jumo.net
Internet: www.jumo.net

JUMO Instrument Co. Ltd.
JUMO House
Temple Bank, Riverway
Harlow, Essex CM 20 2DY, UK
Phone: +44 1279 63 55 33
Fax: +44 1279 62 50 29
Email: sales@jumo.co.uk
Internet: www.jumo.co.uk

JUMO Process Control, Inc.
6733 Myers Road
East Syracuse, NY 13057, USA
Phone: +1 315 437 5866
Fax: +1 315 437 5860
Email: info.us@jumo.net
Internet: www.jumousa.com

Connection	Connec-tor	Terminals	Symbol and terminal designation
Current (0 to 20 mA) Measuring range: Voltage (0 to 50 mV) with shunt 2.5 Ω (see accessories)	4	2 and 3	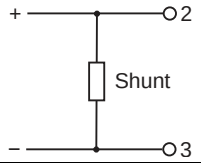

Output

Connection	Connec-tor	Terminals	Symbol and terminal designation
Antenna connector	1		

Interface

Connection	Connec-tor	Terminals	Symbol and terminal designation
Setup	5		

JUMO GmbH & Co. KG
Delivery address: Mackenrodtstraße 14
36039 Fulda, Germany
Postal address: 36035 Fulda, Germany
Phone: +49 661 6003-0
Fax: +49 661 6003-607
Email: mail@jumo.net
Internet: www.jumo.net

JUMO Instrument Co. Ltd.
JUMO House
Temple Bank, Riverway
Harlow, Essex CM 20 2DY, UK
Phone: +44 1279 63 55 33
Fax: +44 1279 62 50 29
Email: sales@jumo.co.uk
Internet: www.jumo.co.uk

JUMO Process Control, Inc.
6733 Myers Road
East Syracuse, NY 13057, USA
Phone: +1 315 437 5866
Fax: +1 315 437 5860
Email: info.us@jumo.net
Internet: www.jumousa.com

Dimensions

Transmitter

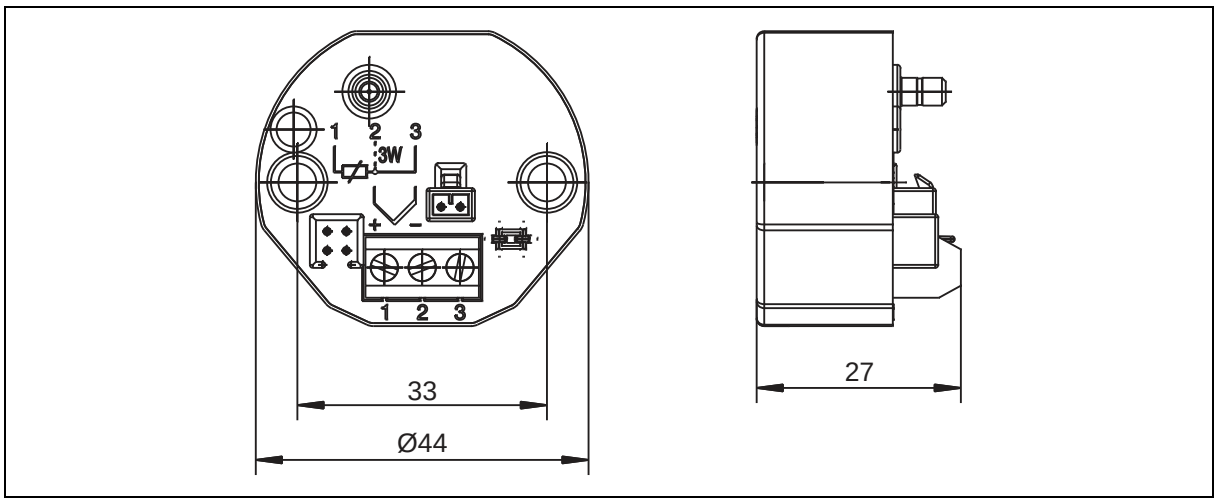

Antenna-battery housing

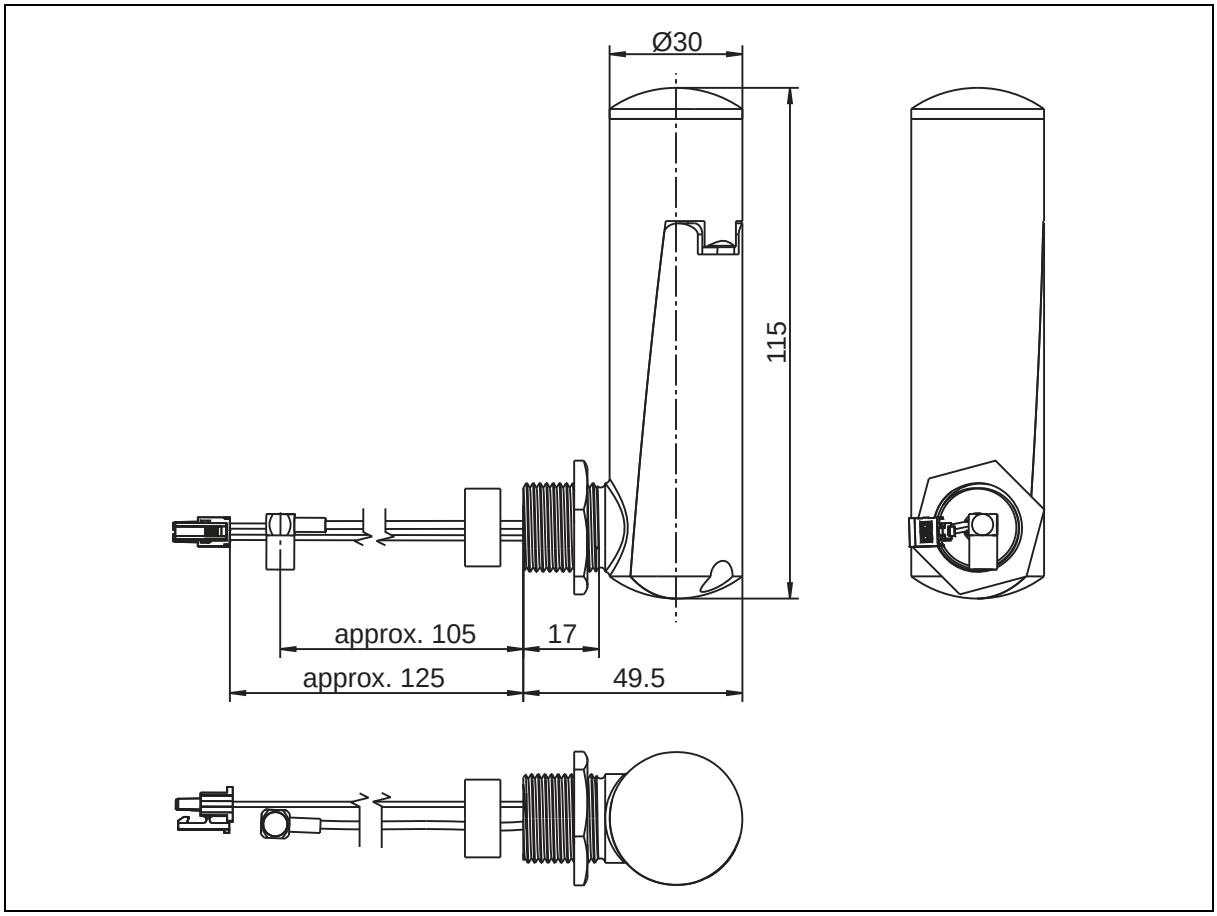

JUMO GmbH & Co. KG
Delivery address: Mackenrodtstraße 14
36039 Fulda, Germany
Postal address: 36035 Fulda, Germany
Phone: +49 661 6003-0
Fax: +49 661 6003-607
Email: mail@jumo.net
Internet: www.jumo.net

JUMO Instrument Co. Ltd.
JUMO House
Temple Bank, Riverway
Harlow, Essex CM 20 2DY, UK
Phone: +44 1279 63 55 33
Fax: +44 1279 62 50 29
Email: sales@jumo.co.uk
Internet: www.jumo.co.uk

JUMO Process Control, Inc.
6733 Myers Road
East Syracuse, NY 13057, USA
Phone: +1 315 437 5866
Fax: +1 315 437 5860
Email: info.us@jumo.net
Internet: www.jumousa.com

Order details

	(1)	**Basic type**
707060		JUMO Wtrans B Programmable head transmitter with wireless data transmission[a]
	(2)	**Input**
8		Standard with default settings
9		Customer-specific programming according to specifications[b]
	(3)	**Output (transmitter)**
10		Radio frequency 868.4 MHz (Europe)
	(4)	**Extra code**
000		None

[a] The terminal head form B is not included in the scope of delivery.

[b] Please specify the transmitter ID, transmission interval, measuring range and the probe type in plain text.

	(1)		(2)		(3)		(4)
Order code		/		-		/	
Order example	707060	/	8	-	10	/	000

Scope of delivery

1 head transmitter in the version ordered, without terminal head, form B, including fastening material (2 screws and 2 pressure springs)
1 antenna-battery housing with plug connections protected against polarity reversal
1 lithium battery, 3.6 V, 2.2 Ah (size AA), inserted in the antenna-battery housing, ready for use
1 operating manual

Accessories

Description	**Part no.**
Lithium battery, 3.6 V, 2.2 Ah (size AA)	00547559
PC interface with USB/TTL converter, adapter (socket), and adapter (pins)	00456352
Setup program on CD-ROM, multilingual	00488887
Setup program including OnlineChart on CD-ROM, multilingual	00549067
OnlineChart activation	00549188
Precision resistor, 2.5 Ω / 0.1% (shunt)	00555645

JUMO GmbH & Co. KG
Delivery address: Mackenrodtstraße 14
36039 Fulda, Germany
Postal address: 36035 Fulda, Germany
Phone: +49 661 6003-0
Fax: +49 661 6003-607
Email: mail@jumo.net
Internet: www.jumo.net

JUMO Instrument Co. Ltd.
JUMO House
Temple Bank, Riverway
Harlow, Essex, CM20 2DY, UK
Phone: +44 1279 63 55 33
Fax: +44 1279 62 50 29
Email: sales@jumo.co.uk
Internet: www.jumo.co.uk

JUMO Process Control, Inc.
6733 Myers Road
East Syracuse, NY 13057, USA
Phone: +1 315 437 5866
Fax: +1 315 437 5860
Email: info.us@jumo.net
Internet: www.jumousa.com

JUMO dTRANS T06 Junior

Entry-level multifunctional four-wire transmitter

Brief description

The dTRANS T06 Junior (type 707070) transmitter acquires the temperature through an RTD temperature probe with 2, 3, or 4-wire circuit or thermocouple. Resistance transmitters with a 3-wire circuit, as well as DC voltage signals in the range from 0 to 1 V can also be connected for the measurement conversion.
The output signal is galvanically isolated from the measurement input and the voltage supply (triple isolation).
Depending on the measurement input, different linearization variants (linear, temperature-linear, or customer-specific) are possible. The variants 0(4) to 20 mA or 0(2) to 10 V are available as the output signal.
Process variables such as temperature or pressure are reliably emitted at the analog output and monitored for out of range.
If a malfunction occurs the transmitter sends a defined output signal according to the recommendation of NAMUR NE 43, which downstream systems can recognize.
The operating statuses are signaled optically using a two-color LED (red, green).
Smooth operation is indicated through a permanent green LED; malfunction status is indicated through a permanent red LED.
The transmitter is configured using the convenient PC setup program without connecting an additional voltage supply (USB-powered).

Type 707070/...

Block diagram

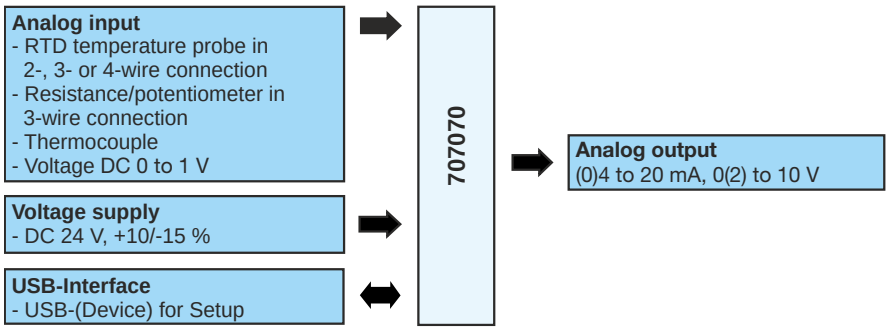

Available ex-works

Special features

- High galvanic signal separation
- Customer-specific linearization
- Output simulation
- Min./Max.drag indicator function
- Operating hours counter
- Convenient setup configuration (USB-powered)
- UL approval

Approvals/approval marks (see "Technical data")

JUMO GmbH & Co. KG
Delivery address: Mackenrodtstraße 14
36039 Fulda, Germany
Postal address: 36035 Fulda, Germany
Phone: +49 661 6003-0
Fax: +49 661 6003-607
Email: mail@jumo.net
Internet: www.jumo.net

JUMO Instrument Co. Ltd.
JUMO House
Temple Bank, Riverway
Harlow, Essex, CM20 2DY, UK
Phone: +44 1279 63 55 33
Fax: +44 1279 62 50 29
Email: sales@jumo.co.uk
Internet: www.jumo.co.uk

JUMO Process Control, Inc.
6733 Myers Road
East Syracuse, NY 13057, USA
Phone: +1 315 437 5866
Fax: +1 315 437 5860
Email: info.us@jumo.net
Internet: www.jumousa.com

Technical data

Analog input

Noise suppression, filter time, measuring value offset, and fine adjustment can be adjusted for all input variants.

RTD temperature probe

Designation	Standard	Measuring range	Measuring accuracy[a]	R_{100} / R_0	ITS
Pt50	GOST 6651-2009 A.2			1.3911	90
2/3-wire circuit		-200 to +850 °C	±0.5 K		
4-wire circuit		-200 to +850 °C	±0.3 K		
Pt100, Pt500, Pt1000	IEC 60751:2008			1.3851	90
2/3-wire circuit		-100 to +200 °C	±0.2 K		
		-200 to +850 °C	±0.4 K		
4-wire circuit		-100 to +200 °C	±0.1 K		
		-200 to +850 °C	±0.2 K		
Ni100, Ni500, Ni1000	DIN 43760:1987-09			1.618	IPTS-68
2/3-wire circuit		-60 to +250 °C	±0.4 K		
4-wire circuit		-60 to +250 °C	±0.2 K		
Ni100	GOST 6651-2009 A.5			1.6172	90
2/3-wire circuit		-60 to +180 °C	±0.4 K		
4-wire circuit		-60 to +180 °C	±0.2 K		
Pt100	GOST 6651-2009 A.2			1.3911	90
2/3-wire circuit		-100 to +200 °C	±0.2 K		
		-200 to +850 °C	±0.4 K		
4-wire circuit		-100 to +200 °C	±0.15 K		
		-200 to +850 °C	±0.25 K		
Cu50	GOST 6651-2009 A.3			1.428	90
2/3-wire circuit		-180 to +200 °C	±0.5 K		
4-wire circuit		-180 to +200 °C	±0.3 K		
Cu100	GOST 6651-2009 A.3			1.428	90
2/3-wire circuit		-180 to +200 °C	±0.4 K		
4-wire circuit		-180 to +200 °C	±0.2 K		

Ambient temperature influence	≤ ±0.005 %/K deviation from 22 °C
Measuring current	< 0.3 mA
Sensor line resistance	≤ 50 Ω per line for 3 and 4-wire circuit ≤ 100 Ω line resistance for 2-wire circuit
Lead compensation	Not required for 3-wire circuit. In 2-wire circuits, lead compensation is performed in the software by entering a fixed line resistance.
Special features	- Can also be programmed in °F - Basic sensor type can be changed with sensor factor (e.g., Pt50 to Pt100)

[a] The accuracy specifications refer to the maximum measuring range.

Thermocouples

Designation	Standard	Measuring range	Measuring accuracy[a]	ITS
Fe-CuNi “L”	DIN 43710:1985-12	-200 to +900 °C	±0.1 %	IPTS-68
Fe-CuNi “J”	DIN EN 60584-1:2014	-210 to +1200 °C	±0.1 % from -100 °C	90
Cu-CuNi “U”	DIN 43710:1985-12	-200 to +600 °C	±0.1 % from -100 °C	IPTS-68
Cu-CuNi “T”	DIN EN 60584-1:2014	-200 to +400 °C	±0.1 % from -150 °C	90
NiCr-Ni “K”	DIN EN 60584-1:2014	-200 to +1300 °C	±0.1 % from -80 °C	90
NiCr-CuNi “E”	DIN EN 60584-1:2014	-200 to +1000 °C	±0.1 % from -80 °C	90
NiCrSi-NiSi “N”	DIN EN 60584-1:2014	-200 to +1300 °C	±0.1 % from -80 °C	90
Pt10Rh-Pt “S”	DIN EN 60584-1:2014	-50 to 1768 °C	±0.15 % from 20 °C	90
Pt13Rh-Pt “R”	DIN EN 60584-1:2014		±0.15 % from 50 °C	

JUMO GmbH & Co. KG
Delivery address: Mackenrodtstraße 14
36039 Fulda, Germany
Postal address: 36035 Fulda, Germany
Phone: +49 661 6003-0
Fax: +49 661 6003-607
Email: mail@jumo.net
Internet: www.jumo.net

JUMO Instrument Co. Ltd.
JUMO House
Temple Bank, Riverway
Harlow, Essex, CM20 2DY, UK
Phone: +44 1279 63 55 33
Fax: +44 1279 62 50 29
Email: sales@jumo.co.uk
Internet: www.jumo.co.uk

JUMO Process Control, Inc.
6733 Myers Road
East Syracuse, NY 13057, USA
Phone: +1 315 437 5866
Fax: +1 315 437 5860
Email: info.us@jumo.net
Internet: www.jumousa.com

Designation	Standard	Measuring range	Measuring accuracy[a]	ITS
Pt30Rh-Pt6Rh “B”	DIN EN 60584-1:2014	-50 to 1820 °C	±0.15 % from 400 °C	90
W5Re-W26Re “C”	ASTM E230M-11	0 to 2315 °C	±0.15 %	90
W5Re-W20Re “A1”	GOST R 8.585-2001	0 to 2500 °C	±0.15 %	90
W3Re-W25Re “D”	ASTM E1751M-09	0 to 2315 °C	±0.25 %	90
Chromel®-COPEL® "L"	GOST R 8.585-2001	-200 to +800 °C	±0.1 % from -80 °C	90
Chromel®-Alumel®	GOST R 8.585-2001	-270 to +1372 °C	±0.1 % from -80 °C	90
Platinel II	ASTM E1751M-09	0 to 1395 °C	±0.15 %	90

Ambient temperature influence	≤ ±0.005 %/K deviation from 22 °C, plus accuracy of the cold junction from 700 °C for Pt30Rh-Pt6Rh “B”
Measuring range start/end	Freely programmable within the limits in steps of 0.1 K
Cold junction	Pt1000 internal, thermostat (fixed constant value), adjustable
Cold junction accuracy (internal)	±1 K
Cold junction temperature (fixed constant value)	-20 to +80 °C adjustable
Special features	Can also be programmed in °F

[a] The accuracy specifications refer to the maximum measuring range.

Voltage

Designation	Measuring range	Measuring accuracy[a]	Ambient temperature influence
Voltage freely scalable Input resistance R_E > 1 MΩ	Voltage DC 0 to 1 V	±0.05 %	≤ ±0.005 %/K deviation from 22 °C

[a] The accuracy specifications refer to the maximum measuring range.

Resistance transmitter

Designation	Measuring range	Measuring accuracy[a]	Ambient temperature influence
Resistance transmitter	0 to 10 kΩ	±10 Ω	≤ ±0.01 %/K deviation from 22 °C

Connection type	Potentiometer in 3-wire circuit
Sensor line resistance	Max. 50 Ω per line
Resistance Ra, Rs, Re	The measuring range can be easily adjusted to any measuring task by entering the resistance values Ra, Rs, and Re in 0.1-Ω steps and using scaling.
Special features	

[a] The accuracy specifications refer to the maximum measuring range.

Resistance/potentiometer

Designation	Measuring range	Measuring accuracy[a]	Ambient temperature influence
Sensor type resistance/potentiometer	0 to 400 Ω 0 to 4000 Ω 0 to 10 kΩ	±0.4 Ω ± 4 Ω ±10 Ω	≤ ±0.01 %/K deviation from 22 °C

Connection type	Resistance in 2, 3, or 4-wire circuit
Sensor line resistance	≤ 50 Ω per line for 3 and 4-wire circuit ≤ 100 Ω line resistance for 2-wire circuit
Resistance values	The measuring range can easily be adjusted to any measuring task by entering the resistance values Rx and Ro in 0.1-Ω steps and using scaling.
Special features	

[a] The accuracy specifications refer to the maximum measuring range.

JUMO GmbH & Co. KG
Delivery address: Mackenrodtstraße 14
36039 Fulda, Germany
Postal address: 36035 Fulda, Germany
Phone: +49 661 6003-0
Fax: +49 661 6003-607
Email: mail@jumo.net
Internet: www.jumo.net

JUMO Instrument Co. Ltd.
JUMO House
Temple Bank, Riverway
Harlow, Essex, CM20 2DY, UK
Phone: +44 1279 63 55 33
Fax: +44 1279 62 50 29
Email: sales@jumo.co.uk
Internet: www.jumo.co.uk

JUMO Process Control, Inc.
6733 Myers Road
East Syracuse, NY 13057, USA
Phone: +1 315 437 5866
Fax: +1 315 437 5860
Email: info.us@jumo.net
Internet: www.jumousa.com

Measuring circuit monitoring

In the event of a malfunction, the outputs move to a defined (configurable) status.

Measuring probe	Out of range	Probe/cable break	Probe/cable short circuit
RTD temperature probe	Is detected	Is detected	Is detected
Resistance transmitter or resistance/potentiometer	Is detected	Is detected	Is not detected
Thermocouple	Is detected	Is detected	Is not detected
Voltage DC 0 to 1 V	Is detected	Is detected	Is not detected

Test voltage

Input and output against voltage supply	DC 1000 V
Measurement input against analog output	DC 1000 V

Analog output

Output signal	Load resistance R_{Load}	Accuracy	Burden influence
Voltage DC 0(2) to 10 V Current DC 0(4) to 20 mA	≥ 2000 Ω ≤ 500 Ω	≤ ±0.05 % referring to 10 V ≤ ±0.05 % referring to 20 mA	≤ ±15 mV ≤ ±0.02 %/100 Ω
Resolution D/A converter	>15 bit		

Limits according to NAMUR recommendation NE 43 in case of deviation above/below measured range	Signal type 4 to 20 mA
Measurement information M	3.8 to 20.5 mA
Failure information A for deviation below measured value/short circuit ("NAMUR Low")	≤ 3.6 mA
Failure information A for deviation above measured value/probe break ("NAMUR High")	≥ 21 mA

Electrical data

Voltage supply	DC 24 V, +10/-15 % SELV or PELV
Power consumption	With voltage supply 24 V: max. 1.5 W
Electrical safety	Acc. to DIN EN 61010-1
Electromagnetic compatibility Interference emission Interference immunity	According to DIN EN 61326-1 Class B domestic industrial requirement
Sampling rate	500 ms
Input filter	Digital filter, 2nd order; filter time constant can be adjusted from 0 to 100 s

Environmental influences

Operating, storage temperature range	-10 to +70 °C, -20 to +80 °C
Resistance to climatic conditions	≤ 85 % relative humidity, annual average, no condensation

Housing

Site altitude	Maximum 2000 m above sea level
Case type, material	Plastic housing, polycarbonate (use in interiors only)
Flammability class	UL94 V0
Electrical connection	Using screw terminals with a cross section of: - max. 2.5 mm^2, wire or stranded wire with ferrule - min. 0.2 mm^2, wire or stranded wire with ferrule
Electrical wiring	In line with the operating conditions, the temperature may exceed 60 °C at the terminals. As a result, the insulation of the cables connected at the terminals may be damaged. The affected cables must be heat-resistant up to at least 80 °C.
Mounting on	Mounting rail 35 mm × 7.5 mm according to DIN IEC 60715
Close mounting	Permitted
Installation position	Vertical

JUMO GmbH & Co. KG
Delivery address: Mackenrodtstraße 14
36039 Fulda, Germany
Postal address: 36035 Fulda, Germany
Phone: +49 661 6003-0
Fax: +49 661 6003-607
Email: mail@jumo.net
Internet: www.jumo.net

JUMO Instrument Co. Ltd.
JUMO House
Temple Bank, Riverway
Harlow, Essex, CM20 2DY, UK
Phone: +44 1279 63 55 33
Fax: +44 1279 62 50 29
Email: sales@jumo.co.uk
Internet: www.jumo.co.uk

JUMO Process Control, Inc.
6733 Myers Road
East Syracuse, NY 13057, USA
Phone: +1 315 437 5866
Fax: +1 315 437 5860
Email: info.us@jumo.net
Internet: www.jumousa.com

Protection type	IP20 according to DIN EN 60529
Weight with screw terminals	Approx. 110 g

Approvals/approval marks

Approval mark	Test facility	**Certificate/certification number**	**Inspection basis**	**Valid for**
c UL us	Underwriters Laboratories	E201387	UL 61010-1	All modules

Display and control elements

Legend	**Comment**	
(1)	USB interface for configuration	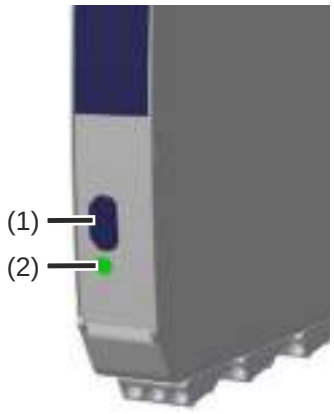
(2)	LED for operating status display	

Galvanic isolation

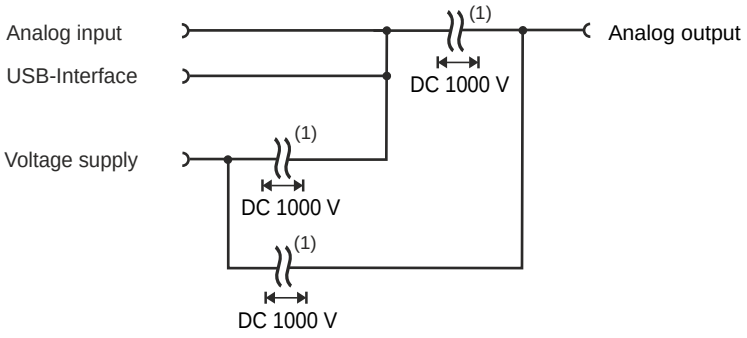

(1) The voltage of von DC 1000 V between the circuit parts is a test voltage and has not to be seen as a continuous voltage to be applied.
This device has no separation of the mains circuits according to DIN EN 61010-1:2011-07.
This device is designed as a SELV - oder PELV device and has to be supplied with a circuit, that meet the requirements of limited energy circuits according EN 61010-1.

JUMO GmbH & Co. KG
Delivery address: Mackenrodtstraße 14
36039 Fulda, Germany
Postal address: 36035 Fulda, Germany
Phone: +49 661 6003-0
Fax: +49 661 6003-607
Email: mail@jumo.net
Internet: www.jumo.net

JUMO Instrument Co. Ltd.
JUMO House
Temple Bank, Riverway
Harlow, Essex, CM20 2DY, UK
Phone: +44 1279 63 55 33
Fax: +44 1279 62 50 29
Email: sales@jumo.co.uk
Internet: www.jumo.co.uk

JUMO Process Control, Inc.
6733 Myers Road
East Syracuse, NY 13057, USA
Phone: +1 315 437 5866
Fax: +1 315 437 5860
Email: info.us@jumo.net
Internet: www.jumousa.com

Connection elements

(L+, L-)	Voltage supply	(41, 42, 43)	Analog output
		(51, 52, 53, 61, 62, 63)	Analog input

Connection diagram

The connection diagram in the data sheet provides preliminary information about the connection options. For the electrical connection, only use the installation instructions or the operating manual. The knowledge and the correct technical execution of the safety information and warnings contained in these documents are mandatory for installation, electrical connection, startup, and for safety during operation.

Analog input

Connection	Screw terminal	Symbol and terminal designation
RTD temperature probe or resistance/potentiometer in 2-wire circuit	(51, 61)	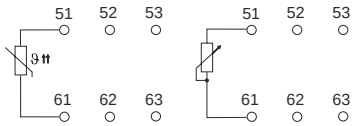
RTD temperature probe or resistance/potentiometer in 3-wire circuit	(51, 52, 61)	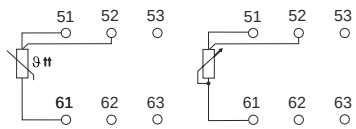
RTD temperature probe or resistance/potentiometer in 4-wire circuit	(51, 52, 61, 62)	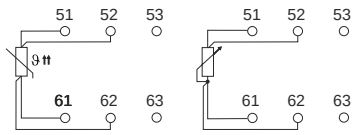

JUMO GmbH & Co. KG
Delivery address: Mackenrodtstraße 14
36039 Fulda, Germany
Postal address: 36035 Fulda, Germany
Phone: +49 661 6003-0
Fax: +49 661 6003-607
Email: mail@jumo.net
Internet: www.jumo.net

JUMO Instrument Co. Ltd.
JUMO House
Temple Bank, Riverway
Harlow, Essex, CM20 2DY, UK
Phone: +44 1279 63 55 33
Fax: +44 1279 62 50 29
Email: sales@jumo.co.uk
Internet: www.jumo.co.uk

JUMO Process Control, Inc.
6733 Myers Road
East Syracuse, NY 13057, USA
Phone: +1 315 437 5866
Fax: +1 315 437 5860
Email: info.us@jumo.net
Internet: www.jumousa.com

Connection	Screw terminal	Symbol and terminal designation
Thermocouple	(51, 52)	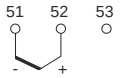
Voltage DC 0 to 1 V	(51, 62)	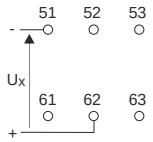
Resistance transmitter A = Start E = End S = Slider	(51, 61, 62)	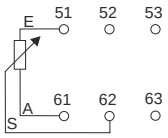

Analog output

Connection	Screw terminal	Symbol and terminal designation
Current DC 0(4) to 20 mA (configurable)	(41, 42)	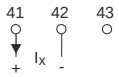
Voltage DC 0(2) to 10 V (configurable)	(41, 42)	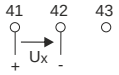

Voltage supply (according to nameplate)

DC 24 V

Connection	Screw terminal	Symbol and terminal designation
DC: The device may only be connected to SELV or PELV electrical circuits that meet the requirements of "Limited-energy circuits" as per DIN EN 61010-1.	(L+) (L-)	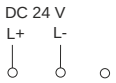

Interfaces

USB (device)

Connection	Socket	Symbol and terminal designation
USB interface (device) Micro-B connector, standard (5-pole)	(1)