FC Geared Type Frame Size 42 mm

Specifications

Motor Product Name	Single Shaft		**AZM46AC-FC7.2□A**	**AZM46AC-FC10□A**	**AZM46AC-FC20□A**	**AZM46AC-FC30□A**
	With Electromagnetic Brake		**AZM46MC-FC7.2□A**	**AZM46MC-FC10□A**	**AZM46MC-FC20□A**	**AZM46MC-FC30□A**
Driver Product Name	Built-in Controller		**AZD-AD** (Single-Phase 100-120 VAC), **AZD-CD** (Single-Phase/Three-Phase 200-240 VAC)			
	Pulse Input with RS-485 Communication		**AZD-AX** (Single-Phase 100-120 VAC), **AZD-CX** (Single-Phase/Three-Phase 200-240 VAC)			
	Pulse Input		**AZD-A** (Single-Phase 100-120 VAC), **AZD-C** (Single-Phase/Three-Phase 200-240 VAC)			
Maximum Holding Torque		N·m	0.7	1	2	3
Rotor Inertial		J: kg·m^2	55×10^{-7} (71×10^{-7})*1			
Gear Ratio			7.2	10	20	30
Resolution	Resolution Setting: 1000 P/R		0.05°/Pulse	0.036°/Pulse	0.018°/Pulse	0.012°/Pulse
Permissible Torque		N·m	0.7	1	2	3
Holding Torque at Motor Standstill	Power ON	N·m	0.7	1	2	3
	Electromagnetic Brake	N·m	0.7	1	2	3
Speed Range		r/min	0～416	0～300	0～150	0～100
Backlash		arcmin	25 (0.42°)		15 (0.25°)	
Power Supply Input	Voltage and Frequency		Single-Phase 100-120 VAC, Single-Phase/Three-Phase 200-240 VAC −15～+6% 50/60 Hz			
	Input Current A	Single-Phase 100-120 VAC	2.7			
		Single-Phase 200-240 VAC	1.7			
		Three-Phase 200-240 VAC	1.0			
Control Power Source			24 VDC ±5%*2 0.25 A (0.33 A)*1			

- Either **U** (Upward) or **D** (Downward) indicating the cable drawing direction is entered where the box □ is located within the product name.
- For details of the standards, check the Oriental Motor website.

*1 The values in the ( ) are those measured when a motor with electromagnetic brake is connected.

*2 For the electromagnetic brake type, the 24 VDC±4% specification applies if the wiring distance between the motor and driver is extended by 20 m using a cable.

Speed – Torque Characteristics (Reference values)

AZM46 Gear Ratio **7.2**

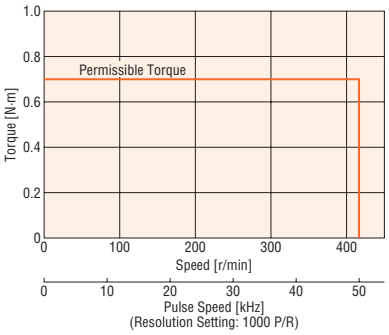

AZM46 Gear Ratio **10**

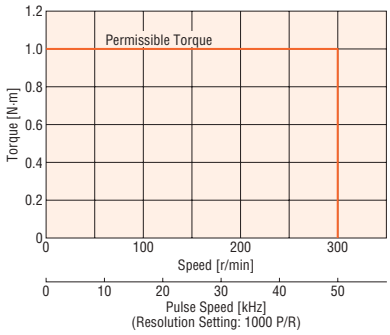

AZM46 Gear Ratio **20**

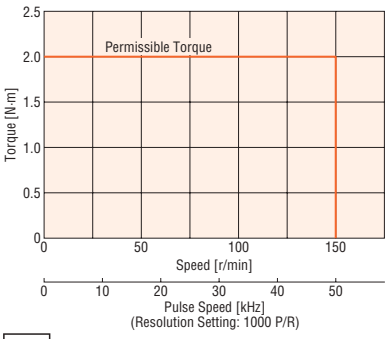

AZM46 Gear Ratio **30**

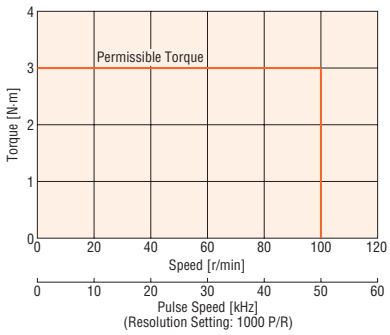

Note

- The speed–torque characteristics shows the data based on the company's measurement conditions. If conditions change, the characteristics may change.
- Depending on the driving conditions, a considerable amount of heat may be generated by the motor. To protect the ABZO sensor, ensure that the motor case temperature is 80°C or less. (When conforming to the UL Standards, it is required to keep the temperature of the motor case at 75°C or less, since the motor is recognized as insulation class A.)

FC Geared Type Frame Size 60 mm

Specifications

Motor Product Name	Single Shaft		**AZM66AC-FC7.2□A**	**AZM66AC-FC10□A**	**AZM66AC-FC20□A**	**AZM66AC-FC30□A**
	With Electromagnetic Brake		**AZM66MC-FC7.2□A**	**AZM66MC-FC10□A**	**AZM66MC-FC20□A**	**AZM66MC-FC30□A**
Driver Product Name	Built-in Controller		**AZD-AD** (Single-Phase 100-120 VAC), **AZD-CD** (Single-Phase/Three-Phase 200-240 VAC)			
	Pulse Input with RS-485 Communication		**AZD-AX** (Single-Phase 100-120 VAC), **AZD-CX** (Single-Phase/Three-Phase 200-240 VAC)			
	Pulse Input		**AZD-A** (Single-Phase 100-120 VAC), **AZD-C** (Single-Phase/Three-Phase 200-240 VAC)			
Maximum Holding Torque		N·m	2.5	3.5	7	10.5
Rotor Inertial		J: kg·m^2	370×10^{-7} (530×10^{-7})*1			
Gear Ratio			7.2	10	20	30
Resolution	Resolution Setting: 1000 P/R		0.05°/Pulse	0.036°/Pulse	0.018°/Pulse	0.012°/Pulse
Permissible Torque		N·m	2.5	3.5	7	10.5
Holding Torque at Motor Standstill	Power ON	N·m	2.5	3.5	7	10.5
	Electromagnetic Brake	N·m	2.5	3.5	7	10.5
Speed Range		r/min	0～416	0～300	0～150	0～100
Backlash		arcmin	15 (0.25°)		10 (0.17°)	
Power Supply Input	Voltage and Frequency		Single-Phase 100-120 VAC, Single-Phase/Three-Phase 200-240 VAC −15～+6% 50/60 Hz			
	Input Current A	Single-Phase 100-120 VAC	3.8			
		Single-Phase 200-240 VAC	2.3			
		Three-Phase 200-240 VAC	1.4			
Control Power Source			24 VDC ±5%*2 0.25 A (0.5 A)*1			

- Either **U** (Upward) or **D** (Downward) indicating the cable drawing direction is entered where the box □ is located within the product name.
- For details of the standards, check the Oriental Motor website.

*1 The values in the ( ) are those measured when a motor with electromagnetic brake is connected.

*2 For the electromagnetic brake type, the 24 VDC±4% specification applies if the wiring distance between the motor and driver is extended by 20 m using a cable.

Speed – Torque Characteristics (Reference values)

AZM66 Gear Ratio **7.2**

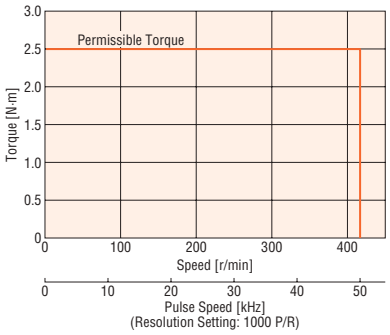

AZM66 Gear Ratio **10**

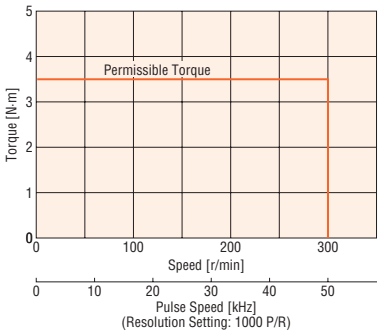

AZM66 Gear Ratio **20**

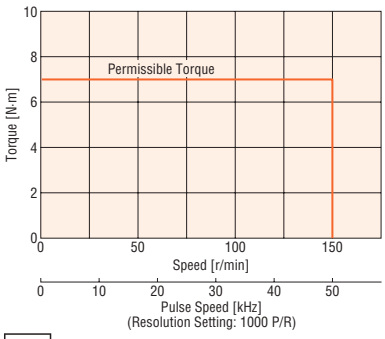

AZM66 Gear Ratio **30**

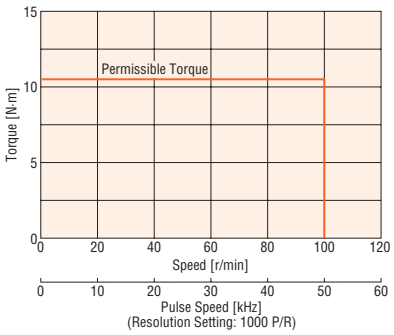

Note

- The speed–torque characteristics shows the data based on the company's measurement conditions. If conditions change, the characteristics may change.
- Depending on the driving conditions, a considerable amount of heat may be generated by the motor. To protect the ABZO sensor, ensure that the motor case temperature is 80°C or less. (When conforming to the UL Standards, it is required to keep the temperature of the motor case at 75°C or less, since the motor is recognized as insulation class A.)

PS Geared Type Frame Size 42 mm

Specifications

Motor Product Name	Single Shaft	**AZM46AC-PS5**	**AZM46AC-PS7.2**	**AZM46AC-PS10**	**AZM46AC-PS25**	**AZM46AC-PS36**	**AZM46AC-PS50**
	With Electromagnetic Brake	**AZM46MC-PS5**	**AZM46MC-PS7.2**	**AZM46MC-PS10**	**AZM46MC-PS25**	**AZM46MC-PS36**	**AZM46MC-PS50**
Driver Product Name	Built-in Controller	**AZD-AD** (Single-Phase 100-120 VAC), **AZD-CD** (Single-Phase/Three-Phase 200-240 VAC)					
	Pulse Input with RS-485 Communication	**AZD-AX** (Single-Phase 100-120 VAC), **AZD-CX** (Single-Phase/Three-Phase 200-240 VAC)					
	Pulse Input	**AZD-A** (Single-Phase 100-120 VAC), **AZD-C** (Single-Phase/Three-Phase 200-240 VAC)					
Maximum Holding Torque	N·m	1	1.5		2.5	3	
Rotor Inertial	J: kg·m^2	55×10^{-7} (71×10^{-7})*1					
Gear Ratio		5	7.2	10	25	36	50
Resolution	Resolution Setting: 1000 P/R	0.072°/Pulse	0.05°/Pulse	0.036°/Pulse	0.0144°/Pulse	0.01°/Pulse	0.0072°/Pulse
Permissible Torque	N·m	1	1.5		2.5	3	
Maximum Instantaneous Torque	N·m	1.5	2		6		
Holding Torque at Motor Standstill	Power ON N·m	0.75	1	1.5	2.5	3	
	Electromagnetic Brake N·m	0.75	1	1.5	2.5	3	
Speed Range	r/min	0～600	0～416	0～300	0～120	0～83	0～60
Backlash	arcmin	15 (0.25°)					
Power Supply Input	Voltage and Frequency	Single-Phase 100-120 VAC, Single-Phase/Three-Phase 200-240 VAC −15～+6% 50/60 Hz					
	Input Current A: Single-Phase 100-120 VAC	2.7					
	Input Current A: Single-Phase 200-240 VAC	1.7					
	Input Current A: Three-Phase 200-240 VAC	1.0					
Control Power Source		24 VDC ±5%*2 0.25 A (0.33 A)*1					

● For details of the standards, check the Oriental Motor website.

*1 The values in the ( ) are those measured when a motor with electromagnetic brake is connected.

*2 For the electromagnetic brake type, the 24 VDC±4% specification applies if the wiring distance between the motor and driver is extended by 20 m using a cable.

Speed – Torque Characteristics (Reference values)

AZM46 Gear Ratio **5**

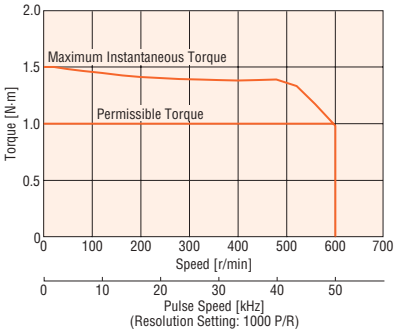

AZM46 Gear Ratio **7.2**

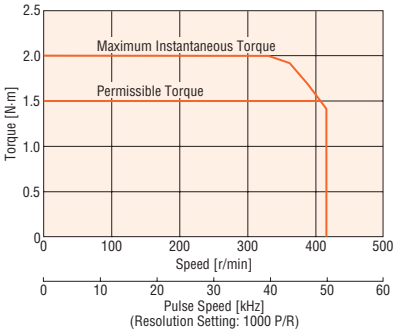

AZM46 Gear Ratio **10**

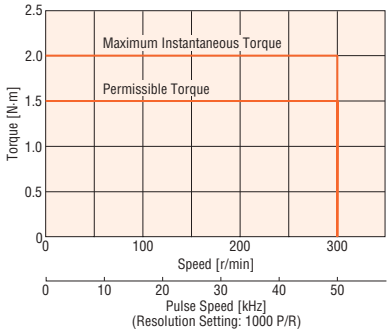

AZM46 Gear Ratio **25**

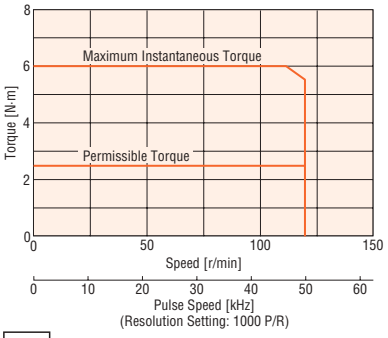

AZM46 Gear Ratio **36**

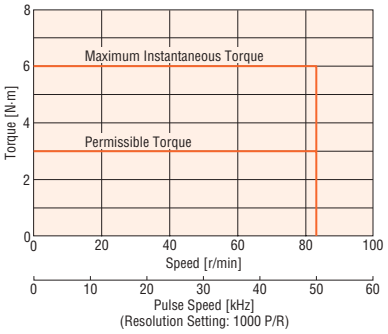

AZM46 Gear Ratio **50**

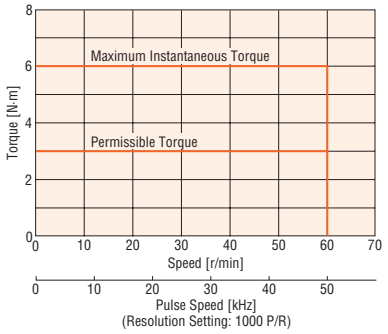

Note

● The speed–torque characteristics shows the data based on the company's measurement conditions. If conditions change, the characteristics may change.

● Depending on the driving conditions, a considerable amount of heat may be generated by the motor. To protect the ABZO sensor, ensure that the motor case temperature is 80°C or less. (When conforming to the UL Standards, it is required to keep the temperature of the motor case at 75°C or less, since the motor is recognized as insulation class A.)

PS Geared Type Frame Size 60 mm

Specifications

Motor Product Name	Single Shaft	AZM66AC-PS5	AZM66AC-PS7.2	AZM66AC-PS10	AZM66AC-PS25	AZM66AC-PS36	AZM66AC-PS50
	With Electromagnetic Brake	AZM66MC-PS5	AZM66MC-PS7.2	AZM66MC-PS10	AZM66MC-PS25	AZM66MC-PS36	AZM66MC-PS50
Driver Product Name	Built-in Controller	**AZD-AD** (Single-Phase 100-120 VAC), **AZD-CD** (Single-Phase/Three-Phase 200-240 VAC)					
	Pulse Input with RS-485 Communication	**AZD-AX** (Single-Phase 100-120 VAC), **AZD-CX** (Single-Phase/Three-Phase 200-240 VAC)					
	Pulse Input	**AZD-A** (Single-Phase 100-120 VAC), **AZD-C** (Single-Phase/Three-Phase 200-240 VAC)					
Maximum Holding Torque	N·m	3.5	4	5	8		
Rotor Inertial	J: kg·m^2	370×10^{-7} (530×10^{-7})*1					
Gear Ratio		5	7.2	10	25	36	50
Resolution	Resolution Setting: 1000 P/R	0.072°/Pulse	0.05°/Pulse	0.036°/Pulse	0.0144°/Pulse	0.01°/Pulse	0.0072°/Pulse
Permissible Torque	N·m	3.5	4	5	8		
Maximum Instantaneous Torque*	N·m	*	*	11	16	20	
Holding Torque at Motor Standstill	Power ON N·m	3	4	5	8		
	Electromagnetic Brake N·m	3	4	5	8		
Speed Range	r/min	0~600	0~416	0~300	0~120	0~83	0~60
Backlash	arcmin	7 (0.12°)			9 (0.15°)		
Power Supply Input	Voltage and Frequency	Single-Phase 100-120 VAC, Single-Phase/Three-Phase 200-240 VAC −15~+6% 50/60 Hz					
	Input Current A: Single-Phase 100-120 VAC	3.8					
	Input Current A: Single-Phase 200-240 VAC	2.3					
	Input Current A: Three-Phase 200-240 VAC	1.4					
Control Power Source		24 VDC ±5%*2 0.25 A (0.5 A)*1					

* For the geared motor output torque, refer to the Speed – Torque Characteristics.

● For details of the standards, check the Oriental Motor website.

*1 The values in the ( ) are those measured when a motor with electromagnetic brake is connected.

*2 For the electromagnetic brake type, the 24 VDC±4% specification applies if the wiring distance between the motor and driver is extended by 20 m using a cable.

Speed – Torque Characteristics (Reference values)

AZM66 Gear Ratio **5**

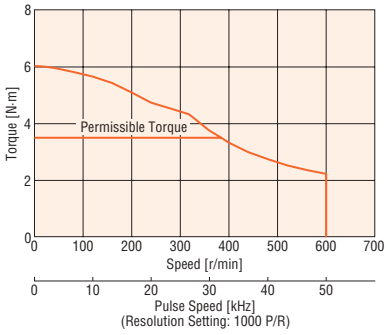

AZM66 Gear Ratio **7.2**

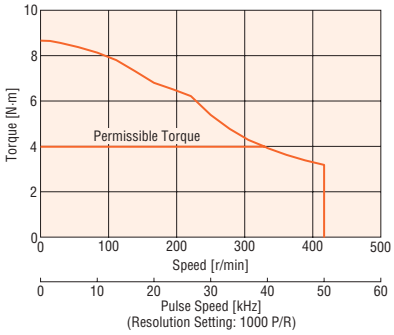

AZM66 Gear Ratio **10**

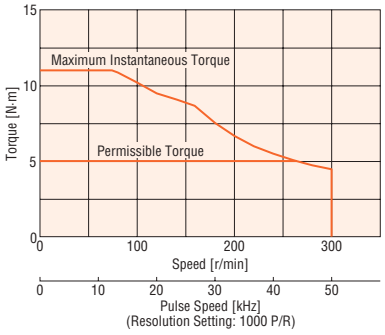

AZM66 Gear Ratio **25**

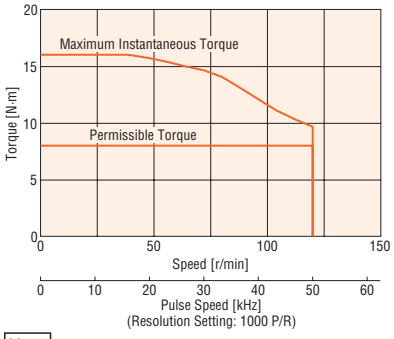

AZM66 Gear Ratio **36**

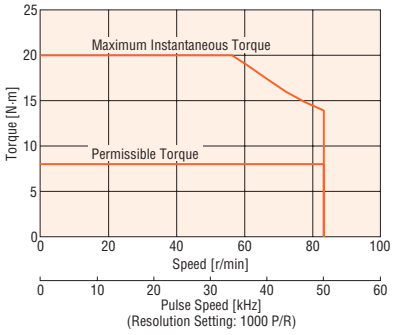

AZM66 Gear Ratio **50**

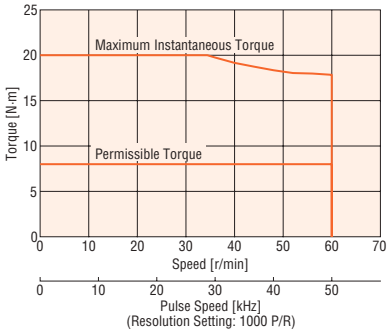

Note

● The speed–torque characteristics shows the data based on the company's measurement conditions. If conditions change, the characteristics may change.

● Depending on the driving conditions, a considerable amount of heat may be generated by the motor. To protect the ABZO sensor, ensure that the motor case temperature is 80°C or less. (When conforming to the UL Standards, it is required to keep the temperature of the motor case at 75°C or less, since the motor is recognized as insulation class A.)

PS Geared Type Frame Size 90 mm

Specifications

Motor Product Name	Single Shaft		AZM98AC-PS5	AZM98AC-PS7.2	AZM98AC-PS10	AZM98AC-PS25	AZM98AC-PS36	AZM98AC-PS50
	With Electromagnetic Brake		AZM98MC-PS5	AZM98MC-PS7.2	AZM98MC-PS10	AZM98MC-PS25	AZM98MC-PS36	AZM98MC-PS50
Driver Product Name	Built-in Controller		**AZD-AD** (Single-Phase 100-120 VAC), **AZD-CD** (Single-Phase/Three-Phase 200-240 VAC)					
	Pulse Input with RS-485 Communication		**AZD-AX** (Single-Phase 100-120 VAC), **AZD-CX** (Single-Phase/Three-Phase 200-240 VAC)					
	Pulse Input		**AZD-A** (Single-Phase 100-120 VAC), **AZD-C** (Single-Phase/Three-Phase 200-240 VAC)					
Maximum Holding Torque		N·m	10	14	20	37		
Rotor Inertial		J: kg·m^2	1090×10^{-7} (1250×10^{-7})*1					
Gear Ratio			5	7.2	10	25	36	50
Resolution	Resolution Setting: 1000 P/R		0.072°/Pulse	0.05°/Pulse	0.036°/Pulse	0.0144°/Pulse	0.01°/Pulse	0.0072°/Pulse
Permissible Torque*		N·m	*	*	20	37		
Maximum Instantaneous Torque*		N·m	*	*	*	*	60	
Holding Torque at Motor Standstill	Power ON	N·m	5	7.2	10	25	36	37
	Electromagnetic Brake	N·m	5	7.2	10	25	36	37
Speed Range		r/min	0～600	0～416	0～300	0～120	0～83	0～60
Backlash		arcmin	7 (0.12°)			9 (0.15°)		
Power Supply Input	Voltage and Frequency		Single-Phase 100-120 VAC, Single-Phase/Three-Phase 200-240 VAC −15～+6% 50/60 Hz					
	Input Current A: Single-Phase 100-120 VAC		5.5					
	Input Current A: Single-Phase 200-240 VAC		3.3					
	Input Current A: Three-Phase 200-240 VAC		2.0					
Control Power Source			24 VDC ±5%*2 0.25 A (0.5 A)*1					

* For the geared motor output torque, refer to the Speed – Torque Characteristics.

● For details of the standards, check the Oriental Motor website.

*1 The values in the ( ) are those measured when a motor with electromagnetic brake is connected.

*2 For the electromagnetic brake type, the 24 VDC±4% specification applies if the wiring distance between the motor and driver is extended by 20 m using a cable.

Speed – Torque Characteristics (Reference values)

AZM98 Gear Ratio **5**

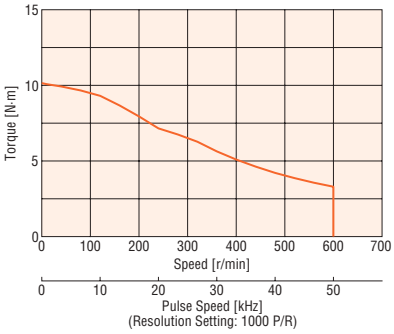

AZM98 Gear Ratio **7.2**

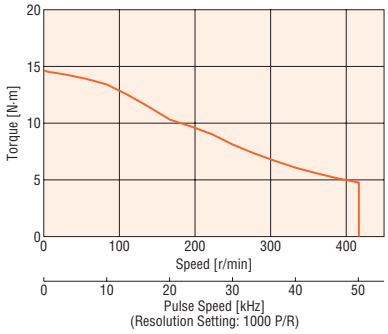

AZM98 Gear Ratio **10**

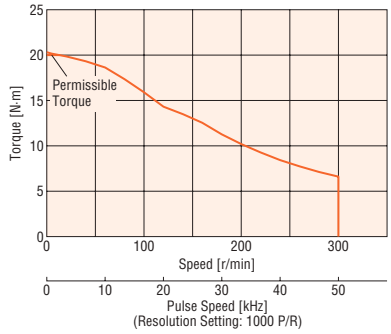

AZM98 Gear Ratio **25**

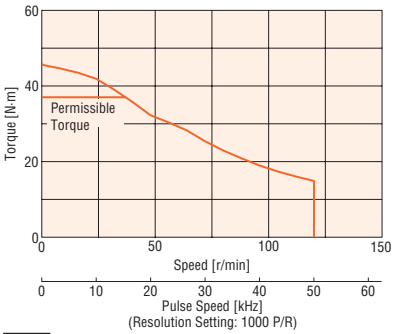

AZM98 Gear Ratio **36**

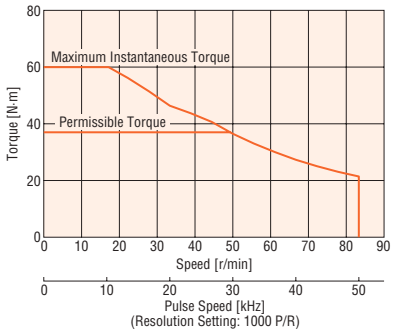

AZM98 Gear Ratio **50**

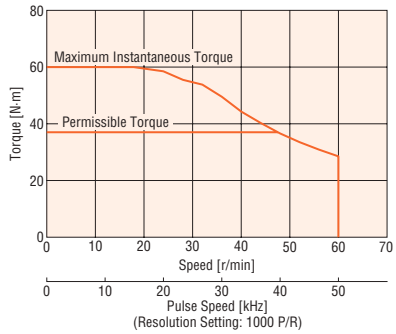

Note

● The speed–torque characteristics shows the data based on the company's measurement conditions. If conditions change, the characteristics may change.

● Depending on the driving conditions, a considerable amount of heat may be generated by the motor. To protect the ABZO sensor, ensure that the motor case temperature is 80°C or less. (When conforming to the UL Standards, it is required to keep the temperature of the motor case at 75°C or less, since the motor is recognized as insulation class A.)

HPG Geared Type Frame Size 40 mm, 60 mm, 90 mm

Specifications

Motor Product Name	Single Shaft		**AZM46AC-HP5□**	**AZM46AC-HP9□**	**AZM66AC-HP5□**	**AZM66AC-HP15□**	**AZM98AC-HP5□**	**AZM98AC-HP15□**
	With Electromagnetic Brake		**AZM46MC-HP5□**	**AZM46MC-HP9□**	**AZM66MC-HP5□**	**AZM66MC-HP15□**	**AZM98MC-HP5□**	**AZM98MC-HP15□**
Driver Product Name	Built-in Controller		**AZD-AD** (Single-Phase 100-120 VAC), **AZD-CD** (Single-Phase/Three-Phase 200-240 VAC)					
	Pulse Input with RS-485 Communication		**AZD-AX** (Single-Phase 100-120 VAC), **AZD-CX** (Single-Phase/Three-Phase 200-240 VAC)					
	Pulse Input		**AZD-A** (Single-Phase 100-120 VAC), **AZD-C** (Single-Phase/Three-Phase 200-240 VAC)					
Maximum Holding Torque		N·m	1.5	2.5	5.9	9	10	24
Rotor Inertial		J: kg·m^2	55×10^{-7} (71×10^{-7})*1		370×10^{-7} (530×10^{-7})*1		1090×10^{-7} (1250×10^{-7})*1	
Inertial*2		J: kg·m^2	5.8×10^{-7} (4.2×10^{-7})	3.4×10^{-7} (2.9×10^{-7})	92×10^{-7} (86×10^{-7})	78×10^{-7} (77×10^{-7})	629×10^{-7} (589×10^{-7})	488×10^{-7} (488×10^{-7})
Gear Ratio			5	9	5	15	5	15
Resolution	Resolution Setting: 1000 P/R		0.072°/Pulse	0.04°/Pulse	0.072°/Pulse	0.024°/Pulse	0.072°/Pulse	0.024°/Pulse
Permissible Torque*		N·m	*	2.5	5.9	9	*	24
Maximum Instantaneous Torque*		N·m	*	*	*	*	*	*
Holding Torque at Motor Standstill	Power ON	N·m	0.75	1.35	3	9	5	15
	Electromagnetic Brake	N·m	0.75	1.35	3	9	5	15
Speed Range		r/min	0~900	0~500	0~900	0~300	0~900	0~300
Backlash		arcmin	3 (0.05°)					
Power Supply Input	Voltage and Frequency		Single-Phase 100-120 VAC, Single-Phase/Three-Phase 200-240 VAC −15~+6% 50/60 Hz					
	Input Current A: Single-Phase 100-120 VAC		2.7		3.8		5.5	
	Input Current A: Single-Phase 200-240 VAC		1.7		2.3		3.3	
	Input Current A: Three-Phase 200-240 VAC		1.0		1.4		2.0	
Control Power Source			24 VDC ±5%*4 0.25 A (0.33 A)*1		24 VDC ±5%*4 0.25 A (0.5 A)*1			
Runout of Output Flange Surface*3		mm	0.02					
Runout of Output Flange Inner Diameter*3		mm	0.03		0.04			

* For the geared motor output torque, refer to the Speed – Torque Characteristics.
● For the flange output type, **F** is entered where the box □ is located within the product name.
● For details of the standards, check the Oriental Motor website.
*1 The values in the ( ) are those measured when a motor with electromagnetic brake is connected.
*2 The values for the moments of inertia within the gear that has been converted to motor shaft values. The ( ) indicate the values for the flange output type.
*3 Specifications for the flange output type.
*4 For the electromagnetic brake type, the 24 VDC±4% specification applies if the wiring distance between the motor and driver is extended by 20 m using a cable.

Speed – Torque Characteristics (Reference values)

AZM46 Gear Ratio **5**

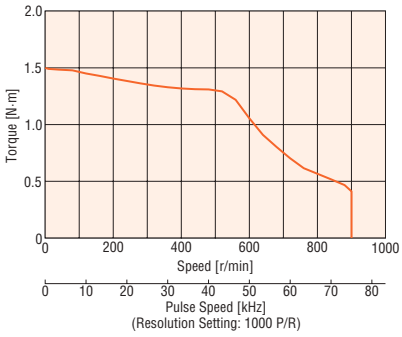

AZM66 Gear Ratio **5**

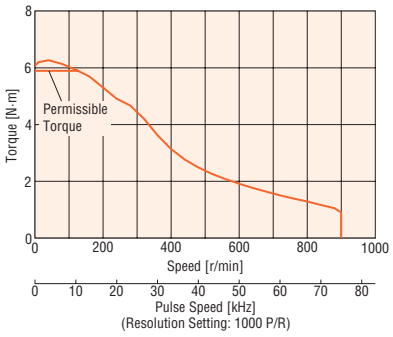

AZM98 Gear Ratio **5**

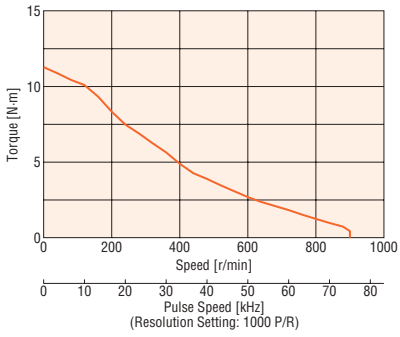

AZM46 Gear Ratio **9**

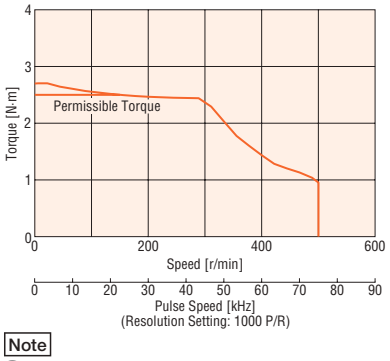

AZM66 Gear Ratio **15**

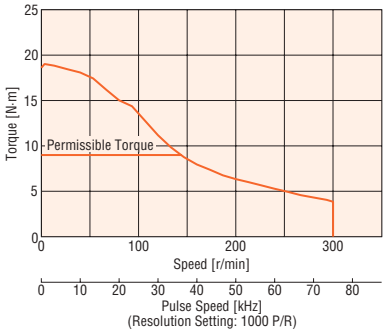

AZM98 Gear Ratio **15**

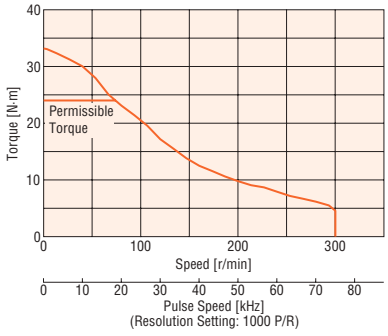

Note

● The speed–torque characteristics shows the data based on the company's measurement conditions. If conditions change, the characteristics may change.
● Depending on the driving conditions, a considerable amount of heat may be generated by the motor. To protect the ABZO sensor, ensure that the motor case temperature is 80°C or less.
(When conforming to the UL Standards, it is required to keep the temperature of the motor case at 75°C or less, since the motor is recognized as insulation class A.)

Harmonic Geared Type Frame Size 42 mm, 60 mm, 90 mm

Specifications

Motor Product Name	Single Shaft	AZM46AC-HS50	AZM46AC-HS100	AZM66AC-HS50	AZM66AC-HS100	AZM98AC-HS50	AZM98AC-HS100
	With Electromagnetic Brake	AZM46MC-HS50	AZM46MC-HS100	AZM66MC-HS50	AZM66MC-HS100	AZM98MC-HS50	AZM98MC-HS100
Driver Product Name	Built-in Controller	**AZD-AD** (Single-Phase 100-120 VAC), **AZD-CD** (Single-Phase/Three-Phase 200-240 VAC)					
	Pulse Input with RS-485 Communication	**AZD-AX** (Single-Phase 100-120 VAC), **AZD-CX** (Single-Phase/Three-Phase 200-240 VAC)					
	Pulse Input	**AZD-A** (Single-Phase 100-120 VAC), **AZD-C** (Single-Phase/Three-Phase 200-240 VAC)					
Maximum Holding Torque	N·m	3.5	5	7	10	33	52
Rotor Inertial	J: kg·m^2	72×10^{-7} (88×10^{-7})*1		405×10^{-7} (565×10^{-7})*1		1290×10^{-7} (1450×10^{-7})*1	
Gear Ratio		50	100	50	100	50	100
Resolution	Resolution Setting: 1000 P/R	0.0072°/Pulse	0.0036°/Pulse	0.0072°/Pulse	0.0036°/Pulse	0.0072°/Pulse	0.0036°/Pulse
Permissible Torque	N·m	3.5	5	7	10	33	52
Maximum Instantaneous Torque*	N·m	8.3	11	23	36	*	107
Holding Torque at Motor Standstill	Power ON N·m	3.5	5	7	10	33	52
	Electromagnetic Brake N·m	3.5	5	7	10	33	52
Speed Range	r/min	0~70	0~35	0~70	0~35	0~70	0~35
Lost Motion (Load torque)	arcmin	1.5 or less (±0.16 N·m)	1.5 or less (±0.20 N·m)	0.7 or less (±0.28 N·m)	0.7 or less (±0.39 N·m)	0.7 or less (±1.2 N·m)	
Power Supply Input	Voltage and Frequency	Single-Phase 100-120 VAC, Single-Phase/Three-Phase 200-240 VAC −15~+6% 50/60 Hz					
	Input Current A: Single-Phase 100-120 VAC	2.7		3.8		5.5	
	Input Current A: Single-Phase 200-240 VAC	1.7		2.3		3.3	
	Input Current A: Three-Phase 200-240 VAC	1.0		1.4		2.0	
Control Power Source		24 VDC ±5%*2 0.25 A (0.33 A)*1		24 VDC ±5%*2 0.25 A (0.5 A)*1			

* For the geared motor output torque, refer to the Speed – Torque Characteristics.

● For details of the standards, check the Oriental Motor website.

*1 The values in the ( ) are those measured when a motor with electromagnetic brake is connected.

*2 For the electromagnetic brake type, the 24 VDC±4% specification applies if the wiring distance between the motor and driver is extended by 20 m using a cable.

Note

● The rotor inertia represents a sum of the inertia of the harmonic gear converted to motor shaft values.

Speed – Torque Characteristics (Reference values)

AZM46 Gear Ratio **50**

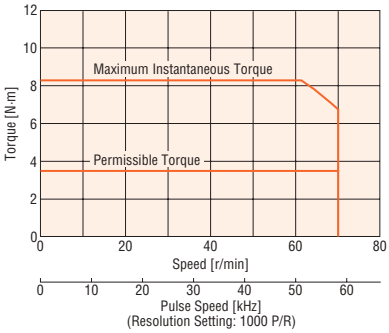

AZM66 Gear Ratio **50**

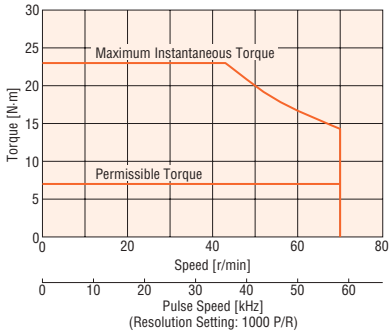

AZM98 Gear Ratio **50**

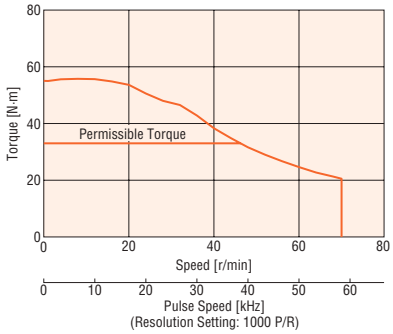

AZM46 Gear Ratio **100**

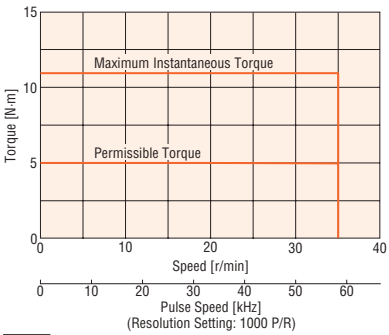

AZM66 Gear Ratio **100**

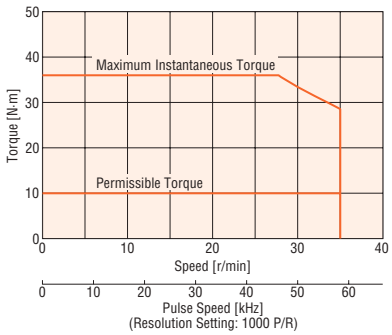

AZM98 Gear Ratio **100**

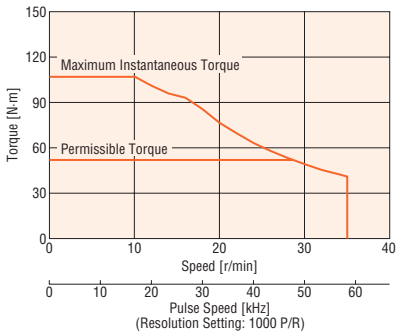

Note

● The speed–torque characteristics shows the data based on the company's measurement conditions. If conditions change, the characteristics may change.

● Depending on the driving conditions, a considerable amount of heat may be generated by the motor. To protect the ABZO sensor, ensure that the motor case temperature is 80°C or less. (When conforming to the UL Standards, it is required to keep the temperature of the motor case at 75°C or less, since the motor is recognized as insulation class A.)

Driver Specifications

Driver Type				Built-in Controller Type	Pulse Input Type with RS-485 Communication	Pulse Input Type
Driver Product Name				**AZD-AD AZD-CD**	**AZD-AX AZD-CX**	**AZD-A AZD-C**
I/O Function	Max. Input Pulse Frequency			–	Line driver output by programmable controller: 1 MHz (When the pulse duty is 50%) Open-collector output by programmable controller: 250 kHz (When the pulse duty is 50%) Negative logic pulse input	
	Number of Positioning Data Sets			256 points	256 points*1	
	Direct Input			10 points	6 points	
	Direct Output			6 points		
	RS-485 Communication Remote Input			16 points		–
	RS-485 Communication Remote Output			16 points		–
Setting Tool	Support Software **MEXE02**			○		
Coordinate Management Method				Battery-free absolute system		
Operation	Positioning Operation	Type	Positioning Operation	○	○	○*1
			Push-motion Positioning Operation*2	○	○	○*1
		Connecting Method	Independent Operation	○	○	○*1
			Forward Feed Operation	○	○	○*1
			Multistep Speed-change (Shape connection)	○	○	○*1
		Sequence Control	Loop Operation (Repetition)	○	○	○*1
			Event Jump Operation	○	○	○*1
	Linked Operation	Position Control		○	○	○*1
		Speed Control		○	○	○*1
		Torque Control		○	○	○*1
		Push-motion*2		○	○	○*1
	Return-to-home Operation		Return-to-home Operation	○	○	○
			High-speed Return-to-home Operation	○	○	○
	JOG Operation			○	○	○
Monitor/Information			Waveform Monitoring	○	○	○
			Overload Detection	○	○	○
			Overheat Detection (Motor and driver)	○	○	○
			Position and Speed Information	○	○	○
			Temperature Detection (Motor and driver)	○	○	○
			Motor Load Factor	○	○	○
			Mileage/Accumulated Mileage	○	○	○
Alarm				○	○	○

*1 Available after setting with support software **MEXE02**.

*2 Push-motion operation is not available to geared motors and **DG II** Series motorized actuators.

RS-485 Communication Specifications

Protocol	Modbus RTU Mode
Electrical Characteristics	EIA-485 based, Straight cable Use twisted-pair cables (TIA/EIA-568B CAT5e or better recommended). The maximum total extension length is 50 m.*
Communication Mode	Half duplex and start-stop synchronization (Data: 8 bits, Stop bit: 1 bit or 2 bits, Parity: none, even, or odd)
Baud Rate	Select from 9600 bps/19200 bps/38400 bps/57600 bps/115200 bps/230400 bps.
Connection Type	Up to 31 units can be connected to a single programmable controller (Master unit).

*If noise generated by the motor cable or power supply cable causes a problem with the specific wiring or layout, shield the cable or use ferrite cores.

General Specifications

		Motor	Driver	
			Built-in Controller Type Pulse Input Type with RS-485 Communication	Pulse Input Type
Heat-resistant Class		130 (B) [Recognized as 105 (A) by UL.]	–	
Insulation Resistance		The measured value is 100 MΩ or more when a 500 VDC megger is applied between the following locations: ・Case – Motor windings ・Case – Electromagnetic brake windings*1	The measured value is 100 MΩ or more when a 500 VDC megger is applied between the following locations: ・Protective earth terminal – Power supply terminal ・Encoder connector – Power supply terminal ・Power input terminal – Power supply terminal	
Dielectric Strength Voltage		No abnormality is found with the following application for 1 minute: ・Case – Motor windings 1.5 kVAC 50 Hz or 60 Hz ・Case – Electromagnetic brake windings*1 1.5 kVAC 50 Hz or 60 Hz	No abnormality is found with the following application for 1 minute: ・Protective earth terminal – Power supply terminal 1.5 kVAC 50 Hz or 60 Hz ・Encoder connector – Power supply terminal 1.8 kVAC 50 Hz or 60 Hz ・Power input terminal – Power supply terminal 1.8 kVAC 50 Hz or 60 Hz	
Operating Environment (In operation)	Ambient Temperature	0～+40°C (Non-freezing)*2	0～+55°C (Non-freezing)*3	
	Ambient Humidity	85% or less (Non-condensing)		
	Atmosphere	Use in an area without corrosive gases and dust. The product should not be exposed to water, oil or other liquids.		
Degree of Protection		IP66 (excluding installation surfaces and connector locations)	IP10	IP20
Stop Position Accuracy		**AZM46**, **AZM48**: ±4 min (±0.067°) **AZM66**, **AZM69**, **AZM98**, **AZM911**: ±3 min (±0.05°)		
Shaft Runout		0.05 T.I.R. (mm)*4	–	
Concentricity of Installation Pilot to the Shaft		0.075 T.I.R. (mm)*4	–	
Perpendicularity of Installation Surface to the Shaft		0.075 T.I.R. (mm)*4	–	
Range of Multiple Rotation Inspection at Power OFF		±900 rotations (1800 rotations)		

*1 Electromagnetic brake type only
*2 Under the Oriental Motor's measurement conditions
*3 When a heat sink equivalent to an aluminum plate size of at least 200×200 mm and 2 mm thickness is installed
*4 T.I.R. (Total Indicator Reading): The total dial gauge reading when the measurement section is rotated one revolution, centered on the reference axis center.

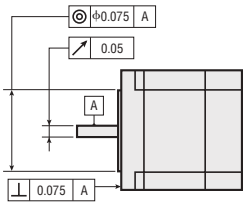

Note

● When measuring insulation resistance or performing a dielectric strength voltage test, be sure to disconnect the motor from the driver beforehand. Also, do not conduct these tests on the ABZO sensor section of the motor.

Electromagnetic Brake Specifications

Product Name		AZM46	AZM66	AZM69	AZM98
Type		Power off activated type			
Power Supply Voltage		24 VDC ±5%*			
Power Supply Current	A	0.08	0.25	0.25	0.25
Brake Activate Time	ms	20			
Brake Release Time	ms	30			
Time Rating		Continuous			

*For the electromagnetic brake type, the 24 VDC±4% specification applies if the wiring distance between the motor and driver is extended by 20 m using a cable.

● The product names are described with text by which the product name can be identified.

Rotation Direction

The figure below shows the rotation directions seen from the output shaft.
The rotation direction of the gear output shaft, which is seen from the output shaft of a standard type motor, differs depending on the gear type or gear ratio.
Refer to the table below.

Type	Gear Ratio	Rotation Direction seen from the Output Shaft
TS Geared Type	**3.6**, **7.2**, **10**	Same direction
	20, **30**	Reverse direction
FC Geared Type **PS** Geared Type **HPG** Geared Type	Total reduction gear ratio	Same direction
Harmonic Geared Type	Total reduction gear ratio	Reverse direction

● Standard type motor

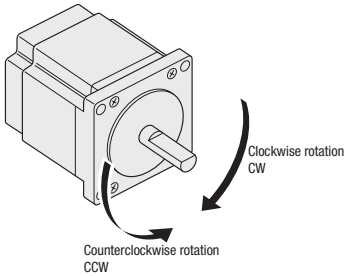

Permissible Radial Load/Permissible Axial Load

Unit: N

Type	Motor Frame Size	Product Name	Gear Ratio	Permissible Radial Load					Permissible Axial Load
				Distance from Shaft End mm					
				0	5	10	15	20	
Standard Type	42 mm	**AZM46**	–	35	44	58	85	–	15
		AZM48		30	35	44	58	85	
	60 mm	**AZM66**, **AZM69**		90	100	130	180	270	30
	85 mm	**AZM98**, **AZM911**		260	290	340	390	480	60
TS Geared Type	42 mm	**AZM46**	**3.6**, **7.2**, **10**	20	30	40	50	–	15
			20, **30**	40	50	60	70	–	
	60 mm	**AZM66**	**3.6**, **7.2**, **10**	120	135	150	165	180	40
			20, **30**	170	185	200	215	230	
	90 mm	**AZM98**	**3.6**, **7.2**, **10**	300	325	350	375	400	150
			20, **30**	400	450	500	550	600	
FC Geared Type	42 mm	**AZM46**	**7.2**, **10**, **20**, **30**	180	200	220	250	–	100
	60 mm	**AZM66**		270	290	310	330	350	200
PS Geared Type	42 mm	**AZM46**	**5**	70	80	95	120	–	100
			7.2	80	90	110	140	–	
			10	85	100	120	150	–	
			25	120	140	170	210	–	
			36	130	160	190	240	–	
			50	150	170	210	260	–	
	60 mm	**AZM66**	**5**	170	200	230	270	320	200
			7.2	200	220	260	310	370	
			10	220	250	290	350	410	
			25	300	340	400	470	560	
			36	340	380	450	530	630	
			50	380	430	500	600	700	
	90 mm	**AZM98**	**5**	380	420	470	540	630	600
			7.2	430	470	530	610	710	
			10	480	530	590	680	790	
			25	650	720	810	920	1070	
			36	730	810	910	1040	1210	
			50	820	910	1020	1160	1350	
HPG Geared Type	40 mm	**AZM46**	**5**	150	170	190	230	270	430
			9	180	200	230	270	320	510
	60 mm	**AZM66**	**5**	250	270	300	330	360	700
			15	360	380	420	460	510	980
	90 mm	**AZM98**	**5**	600	630	670	710	750	1460
			15	830	880	930	980	1050	2030
Harmonic Geared Type	42 mm	**AZM46**	**50**, **100**	180	220	270	360	510	220
	60 mm	**AZM66**		320	370	440	550	720	450
	90 mm	**AZM98**		1090	1150	1230	1310	1410	1300

- The product names are described with text by which the product name can be identified.
- **PS** geared type and **HPG** geared type: The values shown in the table are those that enable a product life of 20,000 hours when either permissible radial load or permissible axial load is applied. For the product life of the gearhead, contact the nearest Oriental Motor sales office, or check the Oriental Motor website.

Radial Load and Axial Load

Distance from Shaft End [mm]

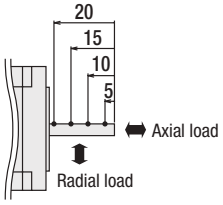

Permissible Moment Load

When eccentric load is applied to the installation surface of the output flange, load moment acts on the bearing.
Before using the motor, apply the formulas below to check that the axial load and load moment are within the specifications.

HPG Geared Type Flange Output Type

Product Name	Gear Ratio	Permissible Axial Load (N)	Permissible Moment Load (N·m)	Constant a(m)
AZM46	**5**	430	4.9	0.006
	9	510	5.9	
AZM66	**5**	700	12.0	0.011
	15	980	17.2	
AZM98	**5**	1460	38.7	0.0115
	15	2030	53.5	

m : Load mass (kg)
g : Gravitational acceleration (m/s^2)
F : External force (N)
L : Overhung distance (m)
a : Constant (m)
ΔF : Load applied to the output flange surface (N)
Fs : Permissible axial load (N)
ΔM : Load moment (N·m)
M : Permissible moment load (N·m)

Apply the formulas below to calculate the load moment.

Example 1: External force F (N) is applied to the protrusion L (m). It is applied horizontally to the center of the output flange.

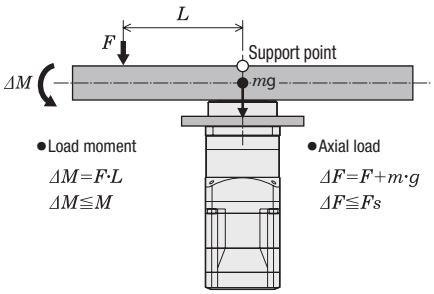

Example 2: External force F (N) is applied to the protrusion L (m). It is applied vertically to the center of the output flange.

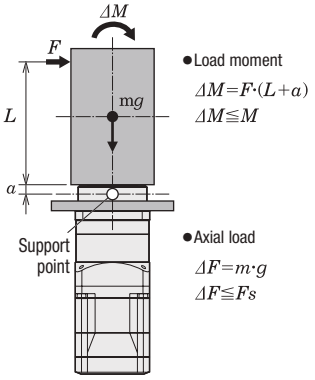

Harmonic Geared Type

Motor Frame Size	Permissible Axial Load (N)	Permissible Moment Load (N·m)	Constant a(m)
42 mm	220	5.6	0.009
60 mm	450	11.6	0.0114

Apply the formulas below to calculate the load moment.

Example 1: External force F (N) is applied to the protrusion L (m). It is applied horizontally to the center of the output flange.

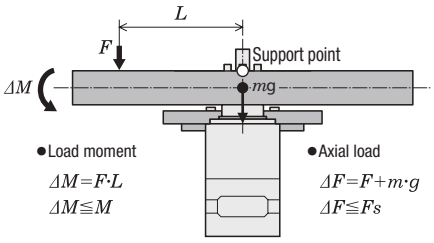

Example 2: External force F (N) is applied to the protrusion L (m). It is applied vertically to the center of the output flange.

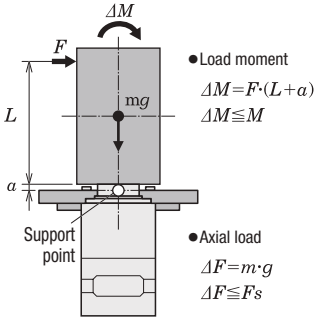

Accuracy of the Harmonic Geared Type

Basic Structure

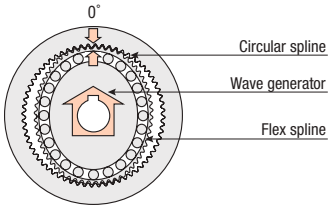

Accuracy

Unlike common reduction gears which employ spur gears, the harmonic geared type has no backlash (play between the meshing gears) between the harmonic gears. With this mechanism, the harmonic gears have the following features: The number of teeth that simultaneously mesh is large; the influence of teeth pitch errors or accumulated pitch errors on rotational accuracy are averaged; and with these, high positioning accuracy is achieved. In addition, the harmonic gears have a high gear ratio. Therefore, the distortion of the output shaft which is caused by the load torque applied to the output shaft is by far smaller than the distortion that occurs on the output shafts of standalone motors or other geared motors. This means that harmonic gears have high rigidity. With high rigidity, harmonic gears are resistant to load change, enabling stable positioning. When high positioning accuracy or rigidity is required, refer to the characteristics described below.

◇Angular Transmission Accuracy

Error between the actual rotation angle of an output shaft and the theoretical rotation angle of the output shaft which is calculated based on the input pulse count. The accuracy is represented by the difference between the minimum error and the maximum error that are measured when the output shaft is rotated once from an arbitrary position.

Product Name	Angular Transmission Accuracy [arcmin]
AZM24-HS□	2 (0.034°)
AZM46-HS□	1.5 (0.025°)
AZM66-HS□	
AZM98-HS□	1 (0.017°)

● Values measured under no load (reference values measured at the gears)

◇Torque – Distortion Characteristics

In actual applications, frictional load is inevitably generated, causing displacement depending on the frictional load. If the frictional load is constant, the displacement is also constant during one direction operation. However, when the motor is operated in both directions (the forward and reverse directions), the displacement doubles during the back and forth motion. The displacement can be assumed from the torque - distortion characteristics described below.

The displacement occurs when external force is applied during stop or when the motor is operated under frictional load. The slope in the graph below is close to the spring constant of each of the three classifications given below and can be estimated by the corresponding calculation.

1. When the load torque T_L is up to T_1

$$\theta = \frac{T_L}{K_1} \text{ [min]}$$

2. When the load torque T_L is above T_1 but up to T_2

$$\theta = \theta_1 + \frac{T_L - T_1}{K_2} \text{ [min]}$$

3. When the load torque T_L exceeds T_2

$$\theta = \theta_2 + \frac{T_L - T_2}{K_3} \text{ [min]}$$

The helix angle determined by the calculation is the helix angle of a stand-alone harmonic gear.

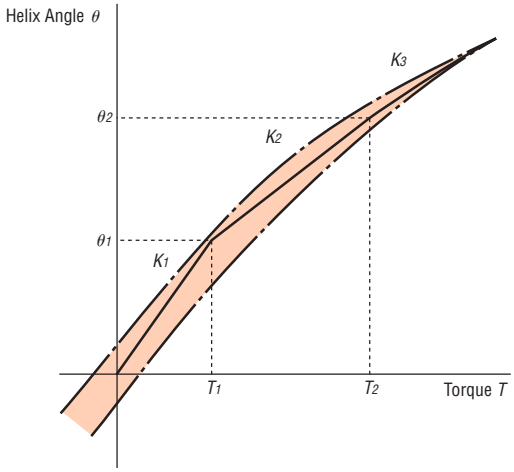

Helix Angle – Torque Characteristics

Values used for the calculation

Product Name	Gear Ratio	T1 N·m	K1 N·m/min	θ1 min	T2 N·m	K2 N·m/min	θ2 min	K3 N·m/min
AZM24-HS50	50	0.29	0.08	3.7	–	0.12	–	–
AZM24-HS100	100	0.29	0.1	2.9	1.5	0.15	11	0.21
AZM46-HS50	50	0.8	0.64	1.25	2	0.87	2.6	0.93
AZM46-HS100	100	0.8	0.79	1.02	2	0.99	2.2	1.28
AZM66-HS50	50	2	0.99	2	6.9	1.37	5.6	1.66
AZM66-HS100	100	2	1.37	1.46	6.9	1.77	4.2	2.1
AZM98-HS50	50	7	3.8	1.85	25	5.2	5.3	6.7
AZM98-HS100	100	7	4.7	1.5	25	7.3	4	8.4

Load Torque – Driver Input Current Characteristics

This is the relationship between the load torque and driver input current at each speed when the motor is actually operated. From these characteristics, the power supply capacity required for use in multi-axis operation can be estimated. For the geared type, convert to torque and speed by the motor shaft.

Motor shaft speed = Gear output shaft speed × Gear ratio [r/min]

$$\text{Motor shaft torque} = \frac{\text{Gear output shaft torque}}{\text{Gear ratio}} \text{ [N·m]}$$

Single-Phase 100-120 VAC

AZM46□C

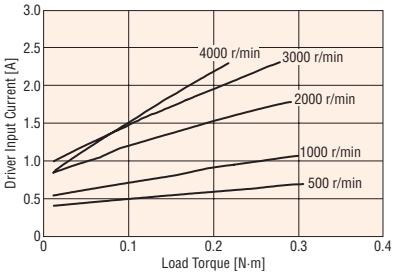

AZM48□C

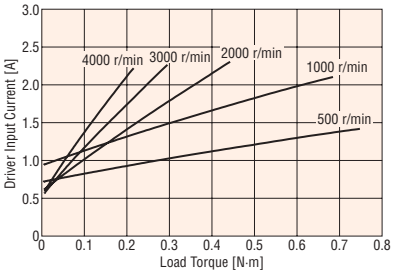

AZM66□C

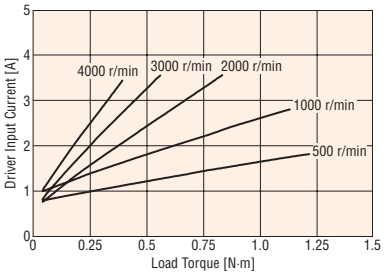

AZM69□C

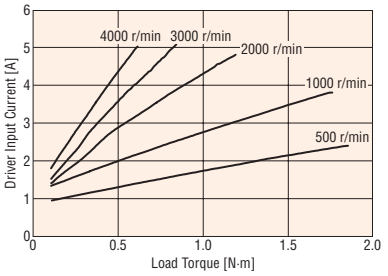

Single-Phase 200-240 VAC

AZM46□C

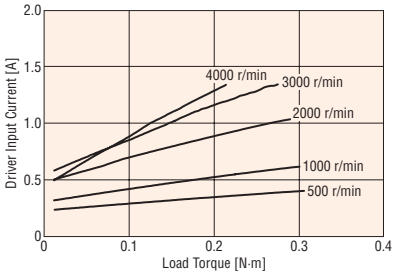

AZM48□C

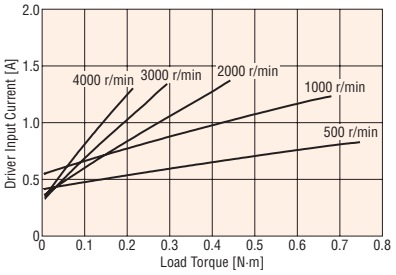

AZM66□C

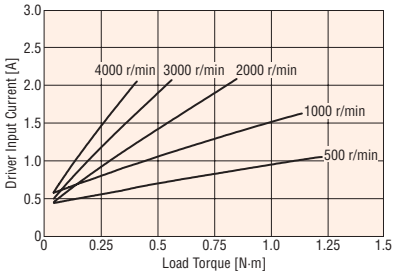

AZM69□C

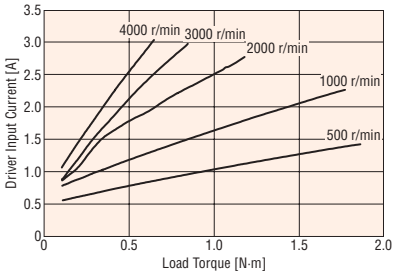

Three-Phase 200-240 VAC

AZM46□C

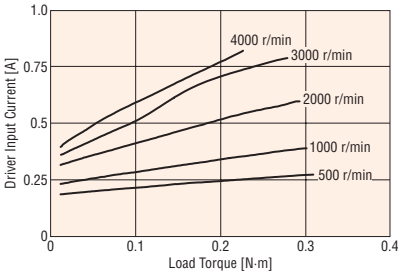

AZM48□C

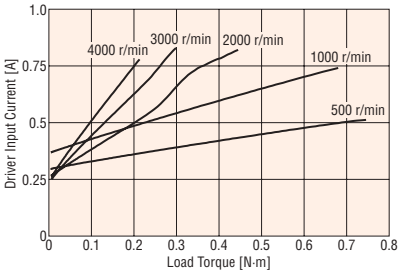

AZM66□C

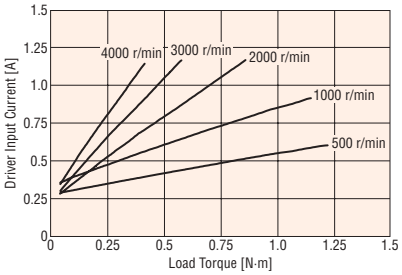

AZM69□C

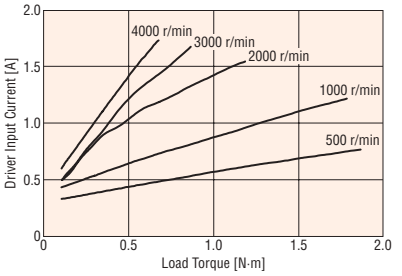

Single-Phase 100-120 VAC

AZM98□C

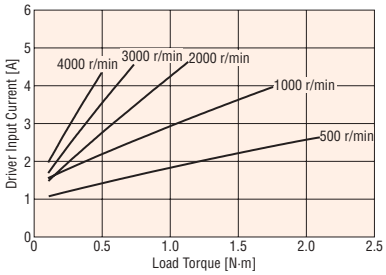

AZM911□C

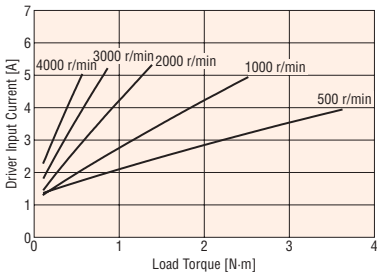

Single-Phase 200-240 VAC

AZM98□C

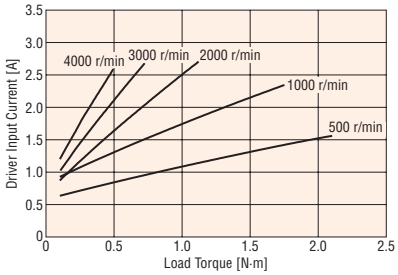

AZM911□C

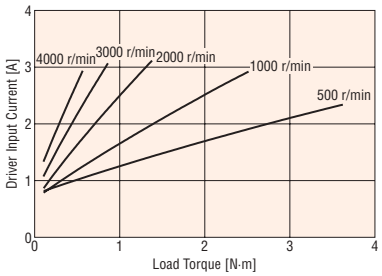

Three-Phase 200-240 VAC

AZM98□C

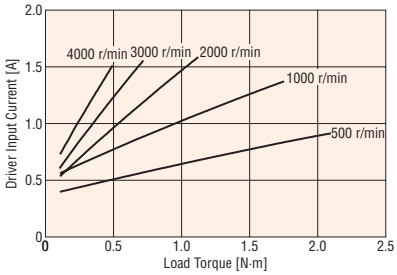

AZM911□C

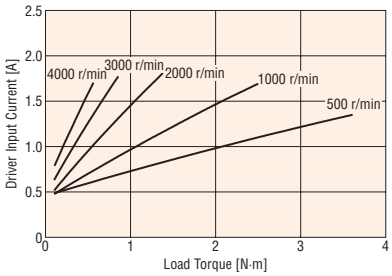

Dimensions (Unit: mm)

Motors

◇Standard Type

Frame Size 42 mm

2D & 3D CAD

Shaft Shape	Product Name	Mass kg	2D CAD
Single Sided Milling	**AZM46AC**	0.44	B1092
Straight	**AZM46A0C**		B1288

Single Sided Milling

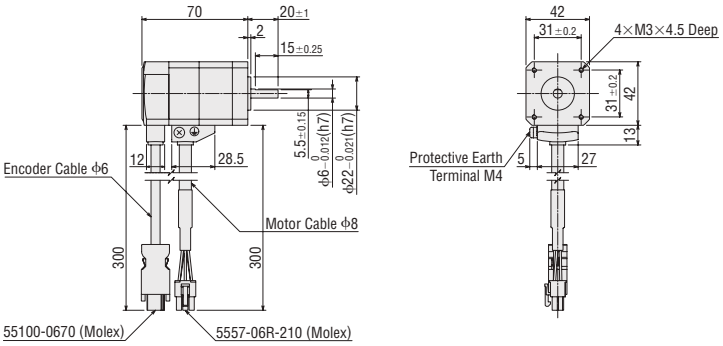

Straight

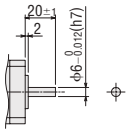

Frame Size 42 mm

2D & 3D CAD

Shaft Shape	Product Name	Mass kg	2D CAD
Single Sided Milling	**AZM48AC**	0.68	B1312
Straight	**AZM48A0C**		B1289
With Key	**AZM48A1C**		B1299

Single Sided Milling

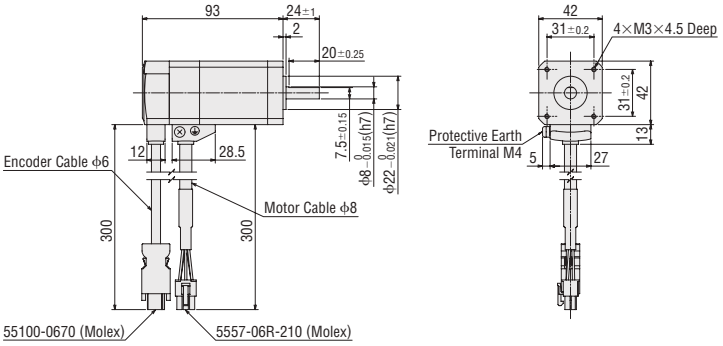

Straight

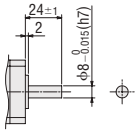

With Key

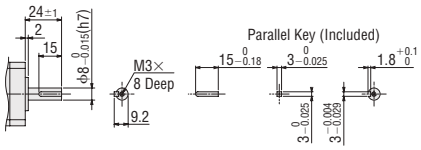

Frame Size 60 mm

2D & 3D CAD

Shaft Shape	Product Name	L	Mass kg	2D CAD
Single Sided Milling	**AZM66AC**	72	0.91	B1093
Straight	**AZM66A0C**			B1290
With Key	**AZM66A1C**			B1300
Single Sided Milling	**AZM69AC**	97.5	1.4	B1129
Straight	**AZM69A0C**			B1291
With Key	**AZM69A1C**			B1301

Single Sided Milling

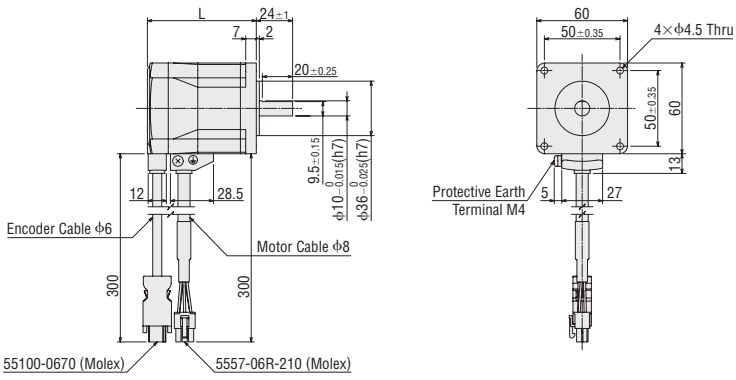

Straight

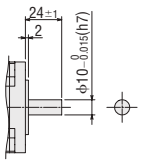

With Key

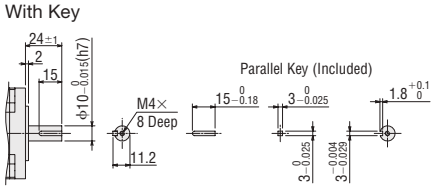

Frame Size 85 mm

2D & 3D CAD

Shaft Shape	Product Name	L	Mass kg	2D CAD
Single Sided Milling	**AZM98AC**	84	1.9	B1181
Straight	**AZM98A0C**			B1292
With Key	**AZM98A1C**			B1302
Single Sided Milling	**AZM911AC**	114	3	B1183
Straight	**AZM911A0C**			B1293
With Key	**AZM911A1C**			B1303

Single Sided Milling

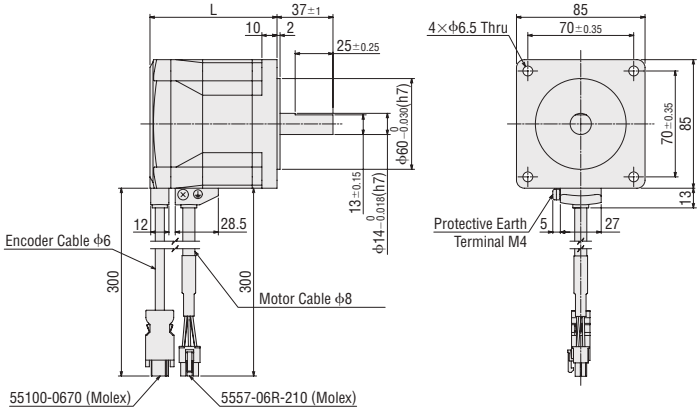

Straight

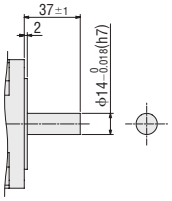

With Key

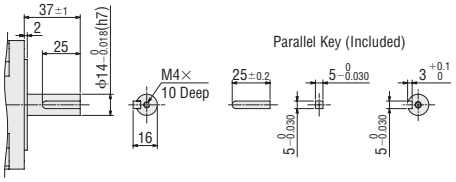

◇Standard Type with Electromagnetic Brake

Frame Size 42 mm

2D & 3D CAD

Shaft Shape	Product Name	Mass kg	2D CAD
Single Sided Milling	**AZM46MC**	0.61	B1154
Straight	**AZM46M0C**		B1294

Single Sided Milling

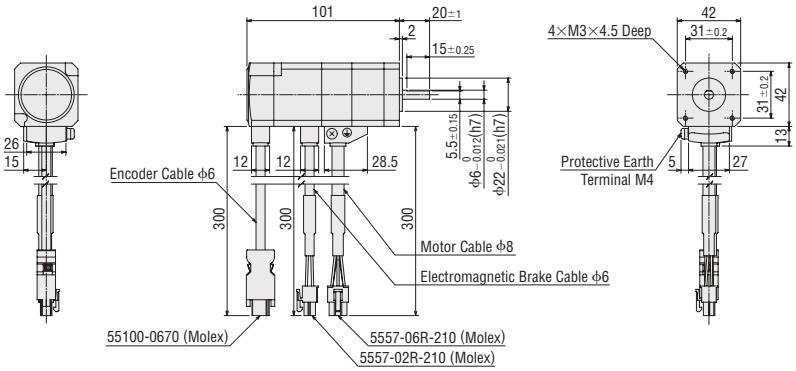

Straight

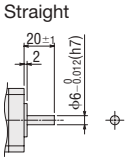

Frame Size 60 mm

2D & 3D CAD

Shaft Shape	Product Name	L	Mass kg	2D CAD
Single Sided Milling	**AZM66MC**	118	1.3	B1155
Straight	**AZM66M0C**			B1295
With Key	**AZM66M1C**			B1305
Single Sided Milling	**AZM69MC**	143.5	1.8	B1156
Straight	**AZM69M0C**			B1296
With Key	**AZM69M1C**			B1306

Single Sided Milling

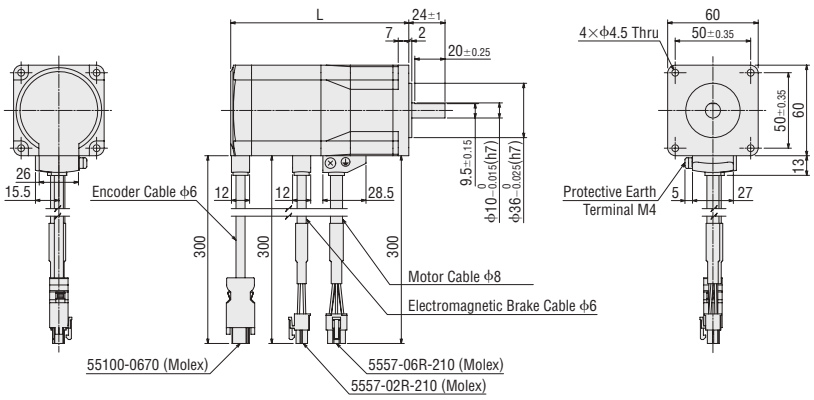

Straight

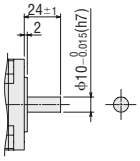

With Key

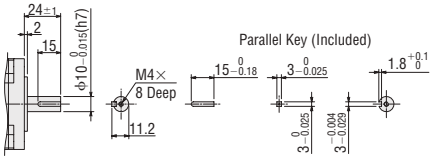

Frame Size 85 mm

2D & 3D CAD

Shaft Shape	Product Name	Mass kg	2D CAD
Single Sided Milling	**AZM98MC**	2.5	B1182
Straight	**AZM98M0C**		B1297
With Key	**AZM98M1C**		B1307

Single Sided Milling

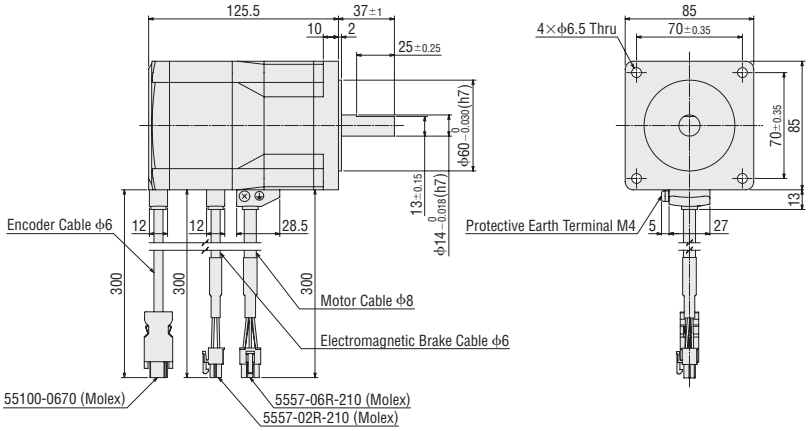

Straight

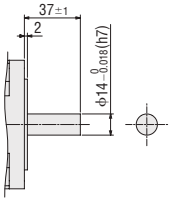

With Key

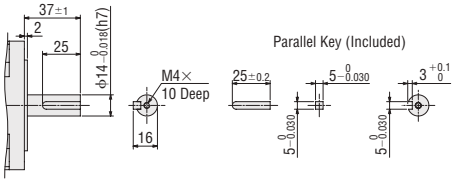

◇TS Geared Type

Frame Size 42 mm

2D & 3D CAD

Cable Drawing Direction	Product Name	Gear Ratio	Mass kg	2D CAD
Downward	**AZM46AC-TS□**	**3.6, 7.2, 10, 20, 30**	0.59	B1157
Right	**AZM46AC-TS□R**			B1272
Upward	**AZM46AC-TS□U**			B1270
Left	**AZM46AC-TS□L**			B1271

● Cable Drawing Direction

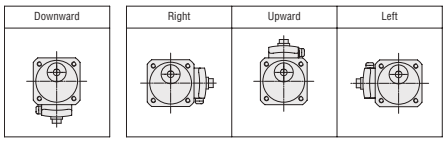

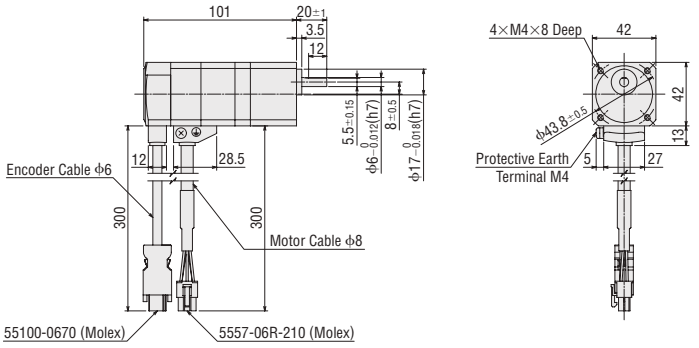

Frame Size 60 mm

2D & 3D CAD

Cable Drawing Direction	Product Name	Gear Ratio	Mass kg	2D CAD
Downward	**AZM66AC-TS□**	**3.6, 7.2, 10, 20, 30**	1.3	B1158
Right	**AZM66AC-TS□R**			B1275
Upward	**AZM66AC-TS□U**			B1273
Left	**AZM66AC-TS□L**			B1274

● Cable Drawing Direction

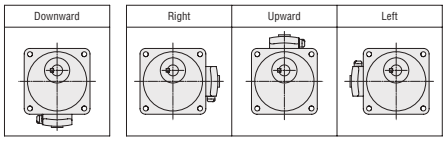

● Installation Screws: M4×60 P0.7 (4 pieces included)

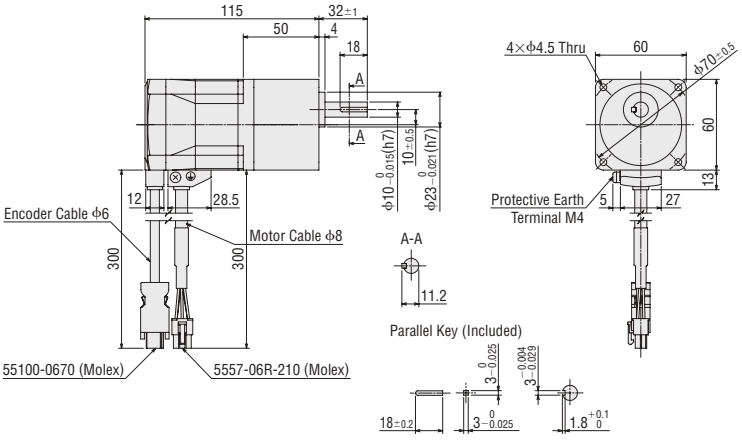

● A number indicating the gear ratio is entered where the box ■ is located within the product name.

Frame Size 90 mm

2D & 3D CAD

Cable Drawing Direction	Product Name	Gear Ratio	Mass kg	2D CAD
Downward	**AZM98AC-TS□**	**3.6, 7.2, 10, 20, 30**	3.1	B1184
Right	**AZM98AC-TS□R**			B1278
Upward	**AZM98AC-TS□U**			B1276
Left	**AZM98AC-TS□L**			B1277

Cable Drawing Direction

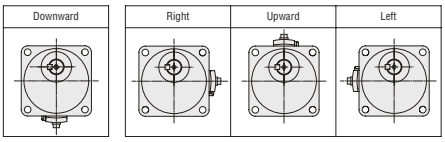

Installation Screws: M8×90 P1.25 (4 pieces included)

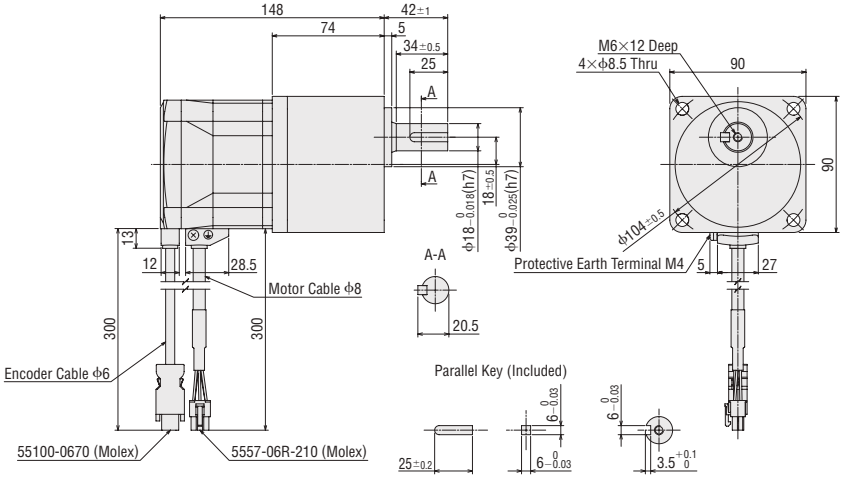

◇TS Geared Type with Electromagnetic Brake

Frame Size 42 mm

2D & 3D CAD

Cable Drawing Direction	Product Name	Gear Ratio	Mass kg	2D CAD
Downward	**AZM46MC-TS□**	**3.6, 7.2, 10, 20, 30**	0.76	B1216
Right	**AZM46MC-TS□R**			B1284
Upward	**AZM46MC-TS□U**			B1282
Left	**AZM46MC-TS□L**			B1283

Cable Drawing Direction

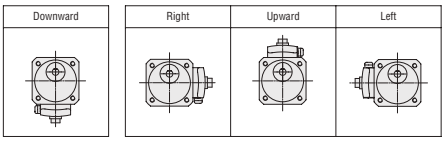

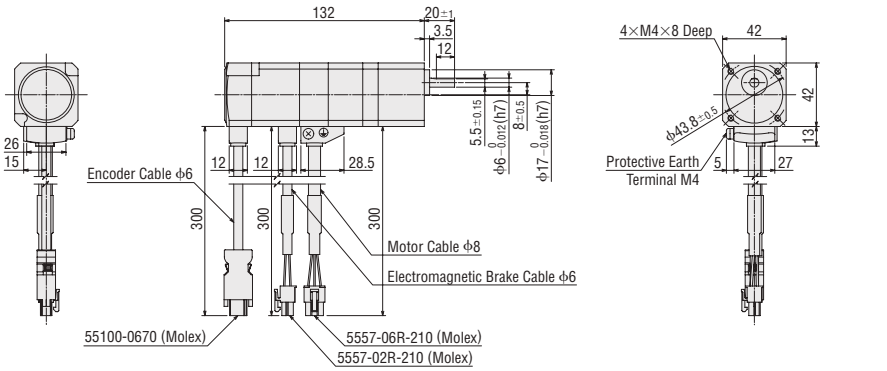

Frame Size 60 mm

2D & 3D CAD

Cable Drawing Direction	Product Name	Gear Ratio	Mass kg	2D CAD
Downward	**AZM66MC-TS□**	**3.6, 7.2, 10, 20, 30**	1.7	B1217
Right	**AZM66MC-TS□R**			B1287
Upward	**AZM66MC-TS□U**			B1285
Left	**AZM66MC-TS□L**			B1286

Cable Drawing Direction

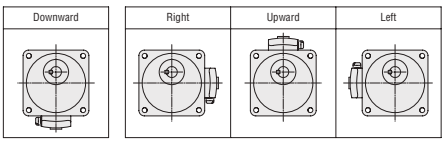

Installation Screws: M4×60 P0.7 (4 pieces included)

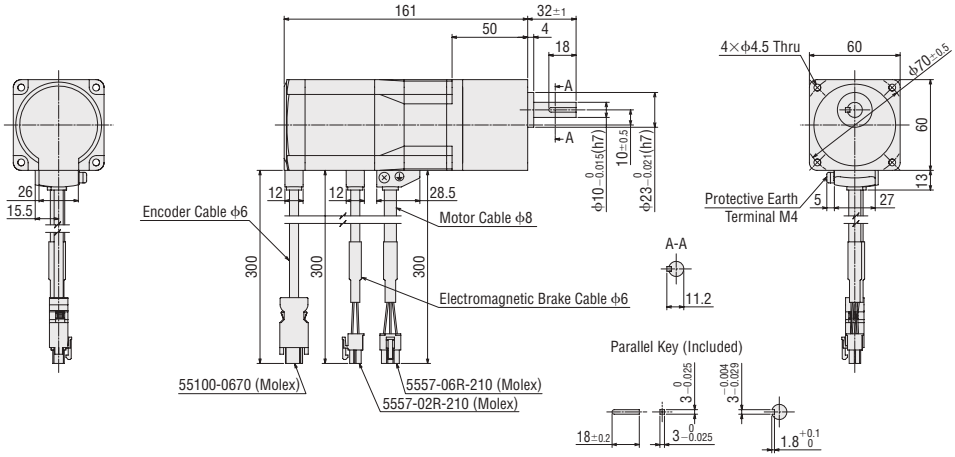

A number indicating the gear ratio is entered where the box □ is located within the product name.

Frame Size 90 mm

2D & 3D CAD

Cable Drawing Direction	Product Name	Gear Ratio	Mass kg	2D CAD
Downward	**AZM98MC-TS■**	**3.6, 7.2, 10, 20, 30**	3.7	B1190
Right	**AZM98MC-TS■R**			B1281
Upward	**AZM98MC-TS■U**			B1279
Left	**AZM98MC-TS■L**			B1280

●Cable Drawing Direction

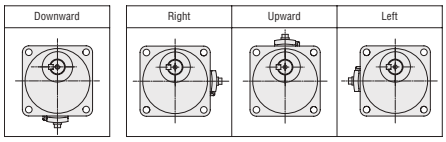

●Installation Screws: M8×90 P1.25 (4 pieces included)

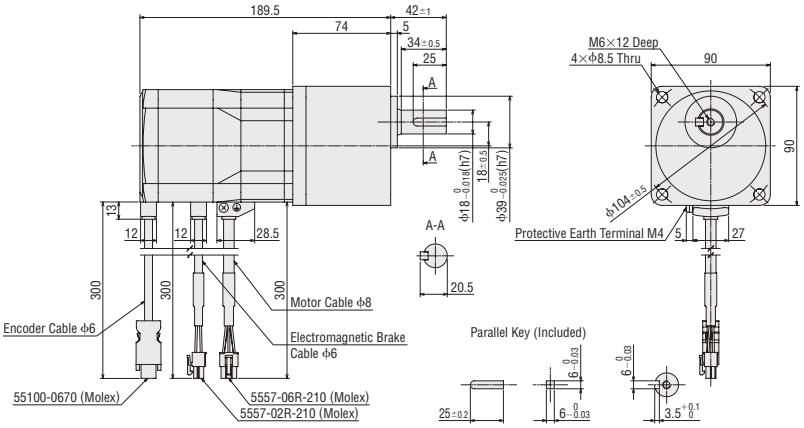

◇FC Geared Type

Frame Size 42 mm Cable Drawing Direction Upward

2D & 3D CAD

Product Name	Gear Ratio	Mass kg	2D CAD
AZM46AC-FC■UA	**7.2, 10, 20, 30**	0.79	B1314

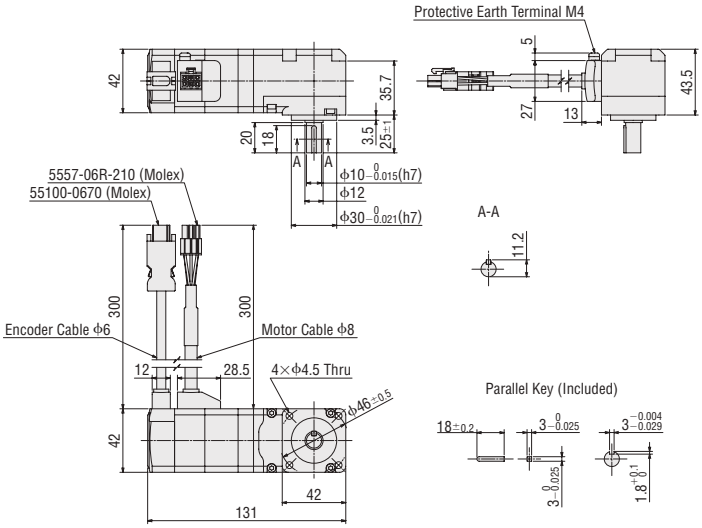

Frame Size 42 mm Cable Drawing Direction Downward

2D & 3D CAD

Product Name	Gear Ratio	Mass kg	2D CAD
AZM46AC-FC■DA	**7.2, 10, 20, 30**	0.79	B1313

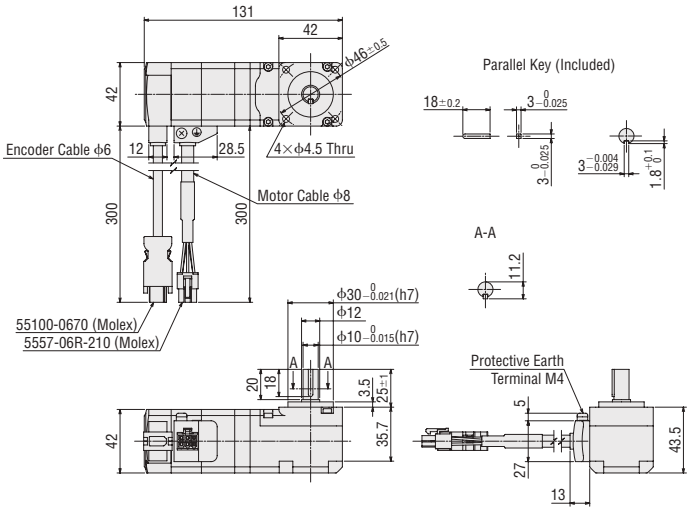

●A number indicating the gear ratio is entered where the box ■ is located within the product name.

Frame Size 60 mm Cable Drawing Direction Upward 2D & 3D CAD

Product Name	Gear Ratio	Mass kg	2D CAD
AZM66AC-FC■UA	**7.2, 10, 20, 30**	1.8	B1318

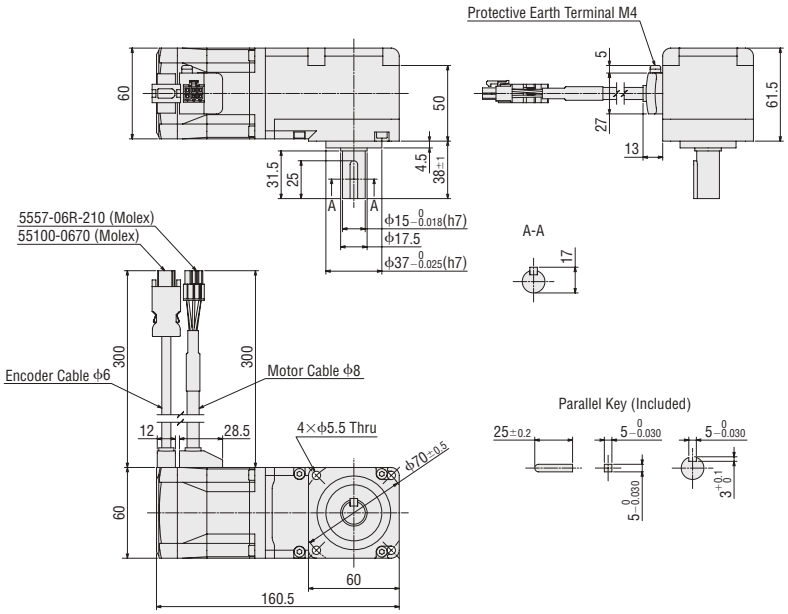

Frame Size 60 mm Cable Drawing Direction Downward 2D & 3D CAD

Product Name	Gear Ratio	Mass kg	2D CAD
AZM66AC-FC■DA	**7.2, 10, 20, 30**	1.8	B1317

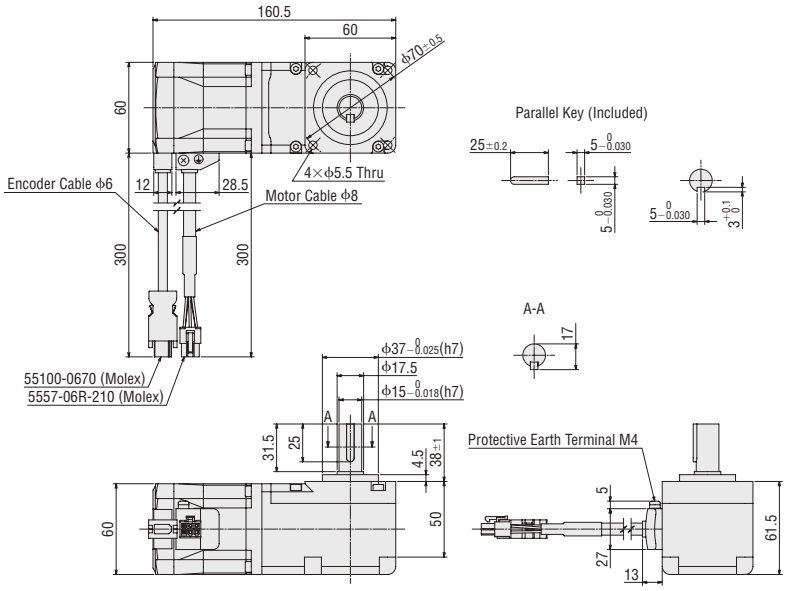

● A number indicating the gear ratio is entered where the box ■ is located within the product name.

◇**FC** Geared Type with Electromagnetic Brake

Frame Size 42 mm　Cable Drawing Direction　Upward　2D & 3D CAD

Product Name	Gear Ratio	Mass kg	2D CAD
AZM46MC-FC■UA	**7.2**, **10**, **20**, **30**	0.96	B1316

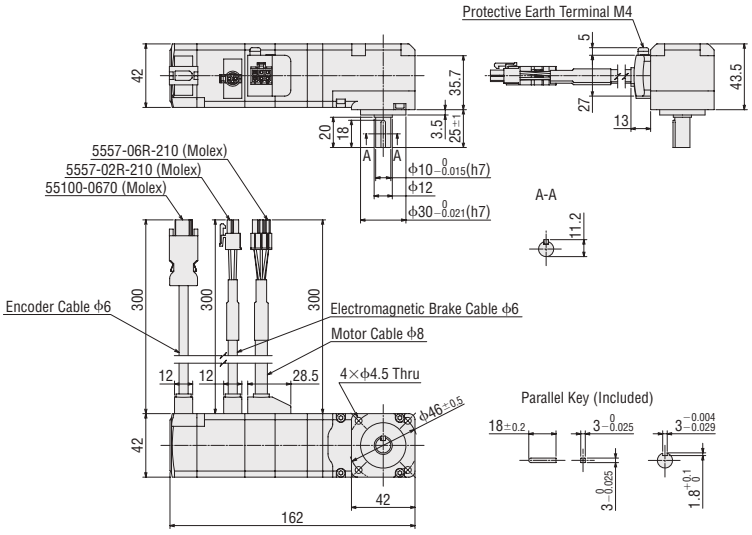

Frame Size 42 mm　Cable Drawing Direction　Downward　2D & 3D CAD

Product Name	Gear Ratio	Mass kg	2D CAD
AZM46MC-FC■DA	**7.2**, **10**, **20**, **30**	0.96	B1315

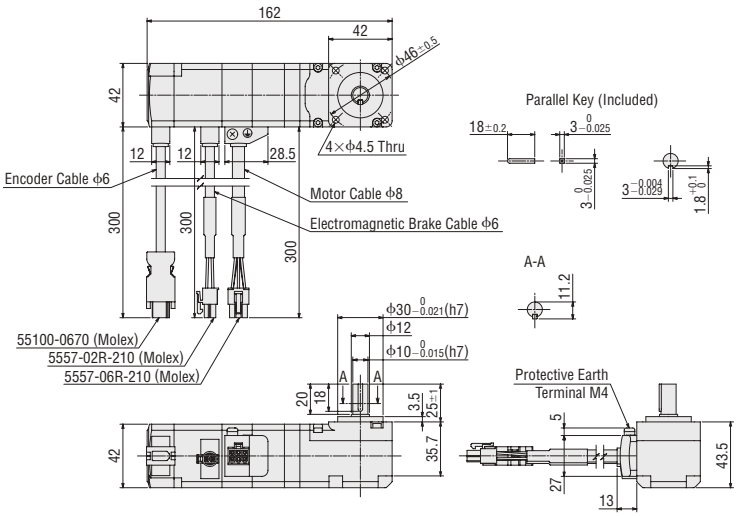

●A number indicating the gear ratio is entered where the box ■ is located within the product name.

Frame Size 60 mm　Cable Drawing Direction　Upward　2D & 3D CAD

Product Name	Gear Ratio	Mass kg	2D CAD
AZM66MC-FC■UA	**7.2**, **10**, **20**, **30**	2.2	B1320

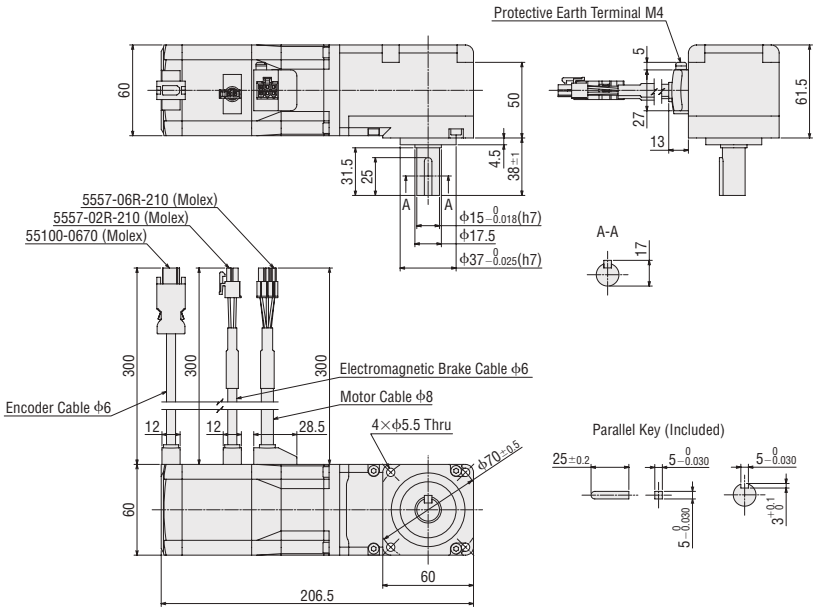

Frame Size 60 mm　Cable Drawing Direction　Downward　2D & 3D CAD

Product Name	Gear Ratio	Mass kg	2D CAD
AZM66MC-FC■DA	**7.2**, **10**, **20**, **30**	2.2	B1319

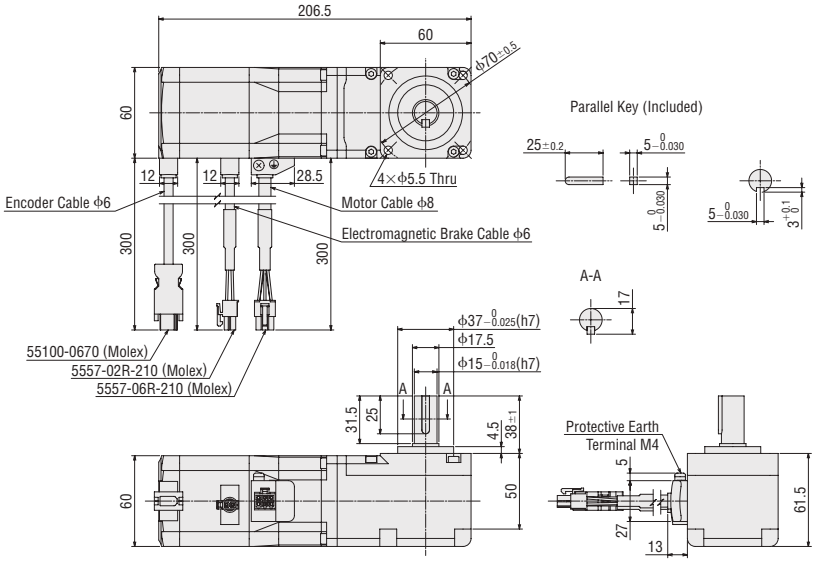

● A number indicating the gear ratio is entered where the box ■ is located within the product name.

◇**PS** Geared Type

Frame Size 42 mm

2D & 3D CAD

Product Name	Gear Ratio	L	Mass kg	2D CAD
AZM46AC-PS■	**5, 7.2, 10**	98	0.64	B1159
	25, 36, 50	121.5	0.79	B1160

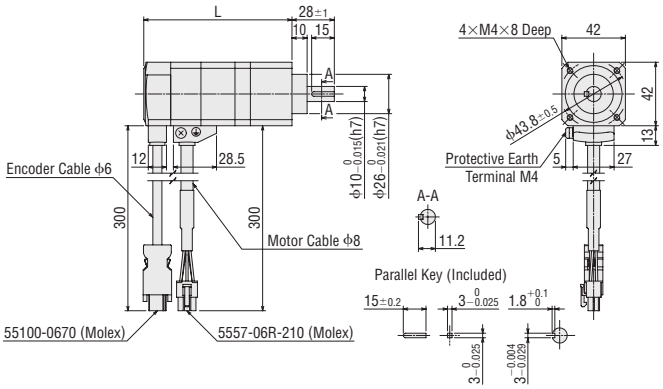

Frame Size 60 mm

2D & 3D CAD

Product Name	Gear Ratio	L	Mass kg	2D CAD
AZM66AC-PS■	**5, 7.2, 10**	104	1.3	B1161
	25, 36, 50	124	1.6	B1162

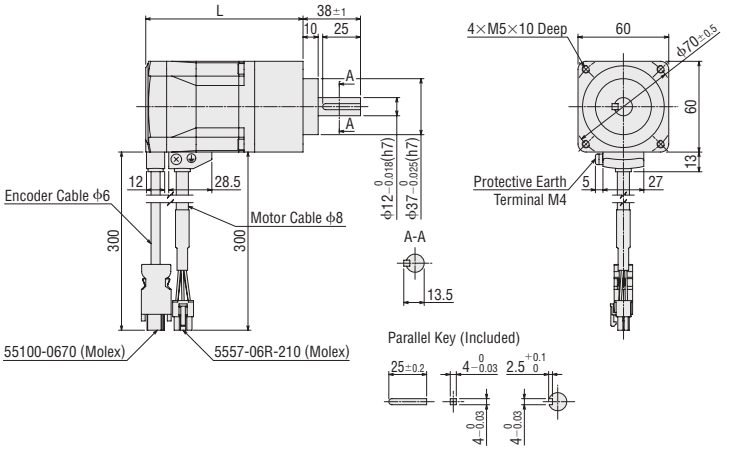

Frame Size 90 mm

2D & 3D CAD

Product Name	Gear Ratio	L	Mass kg	2D CAD
AZM98AC-PS■	**5, 7.2, 10**	131	3.3	B1185
	25, 36, 50	158.5	4.1	B1186

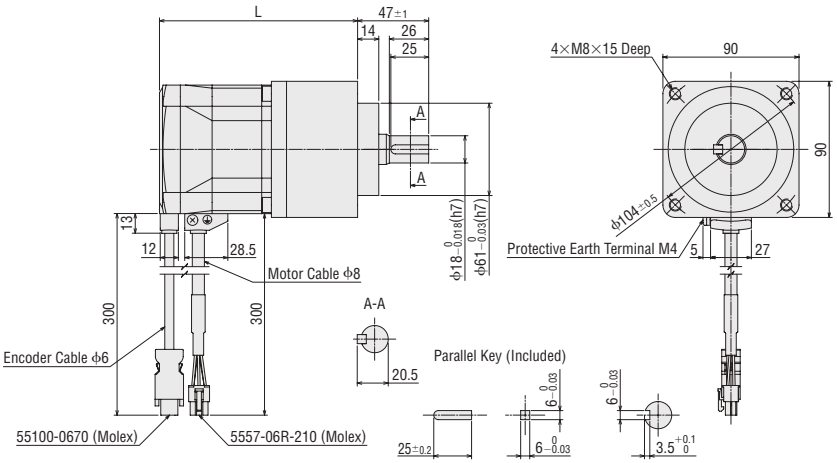

●A number indicating the gear ratio is entered where the box ■ is located within the product name.

◇**PS** Geared Type with Electromagnetic Brake

Frame Size 42 mm

2D & 3D CAD

Product Name	Gear Ratio	L	Mass kg	2D CAD
AZM46MC-PS□	**5**, **7.2**, **10**	129	0.81	B1218
	25, **36**, **50**	152	0.96	B1219

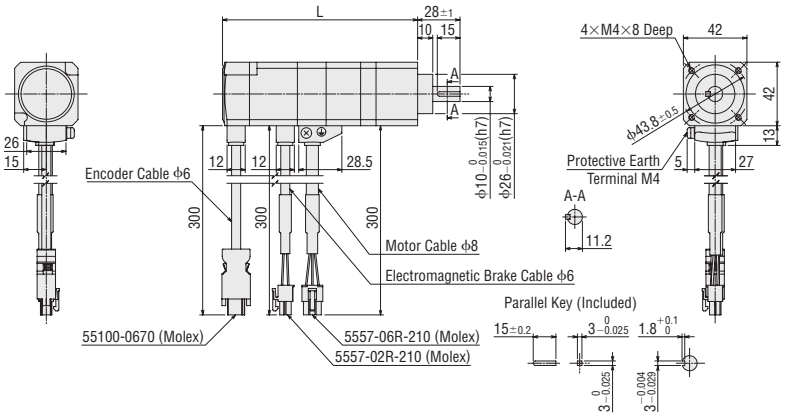

Frame Size 60 mm

2D & 3D CAD

Product Name	Gear Ratio	L	Mass kg	2D CAD
AZM66MC-PS□	**5**, **7.2**, **10**	150	1.7	B1220
	25, **36**, **50**	170	2.0	B1221

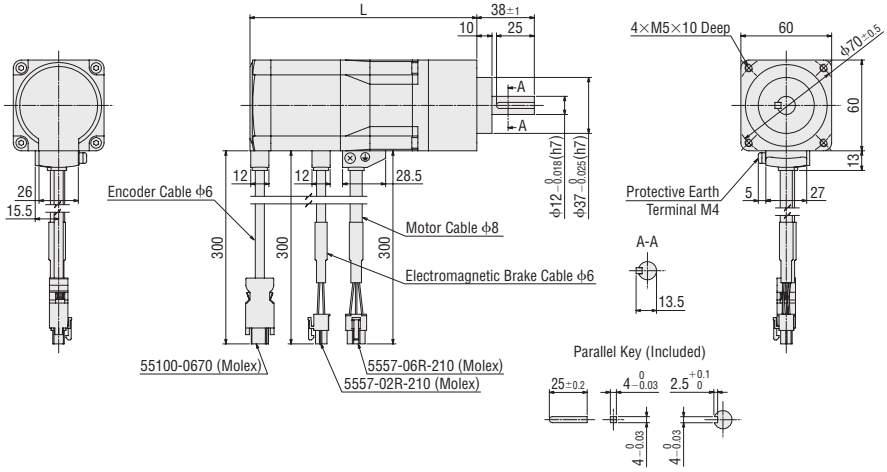

Frame Size 90 mm

2D & 3D CAD

Product Name	Gear Ratio	L	Mass kg	2D CAD
AZM98MC-PS□	**5**, **7.2**, **10**	172.5	3.9	B1191
	25, **36**, **50**	200	4.7	B1192

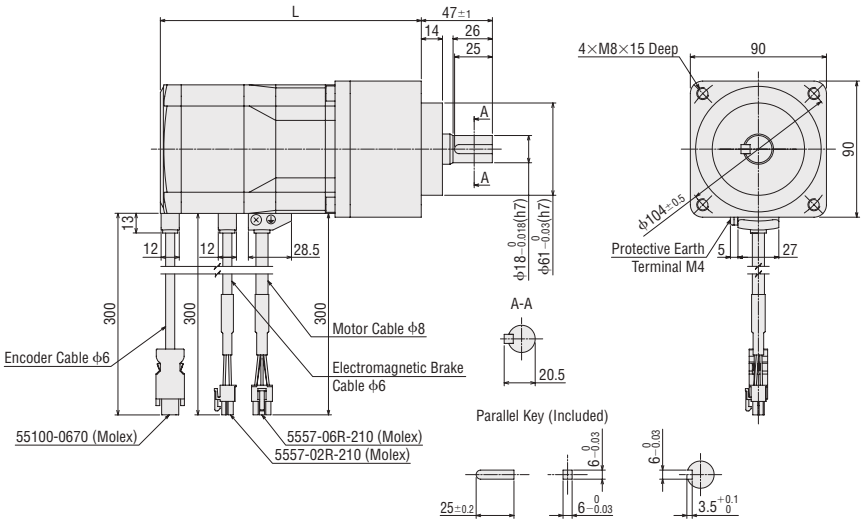

●A number indicating the gear ratio is entered where the box □ is located within the product name.

◇**HPG** Geared Type　Shaft Output Type

Frame Size 40 mm

2D & 3D CAD

Product Name	Gear Ratio	Mass kg	2D CAD
AZM46AC-HP■	**5, 9**	0.71	B1163

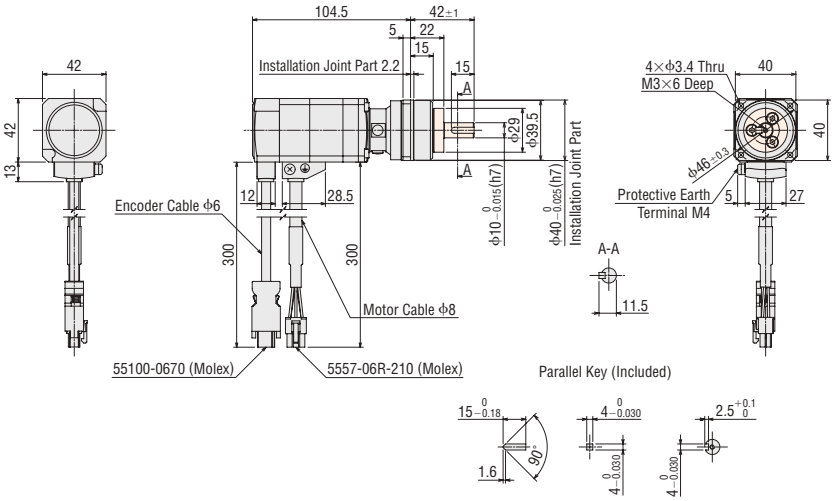

Frame Size 60 mm

2D & 3D CAD

Product Name	Gear Ratio	Mass kg	2D CAD
AZM66AC-HP■	**5, 15**	1.9	B1165

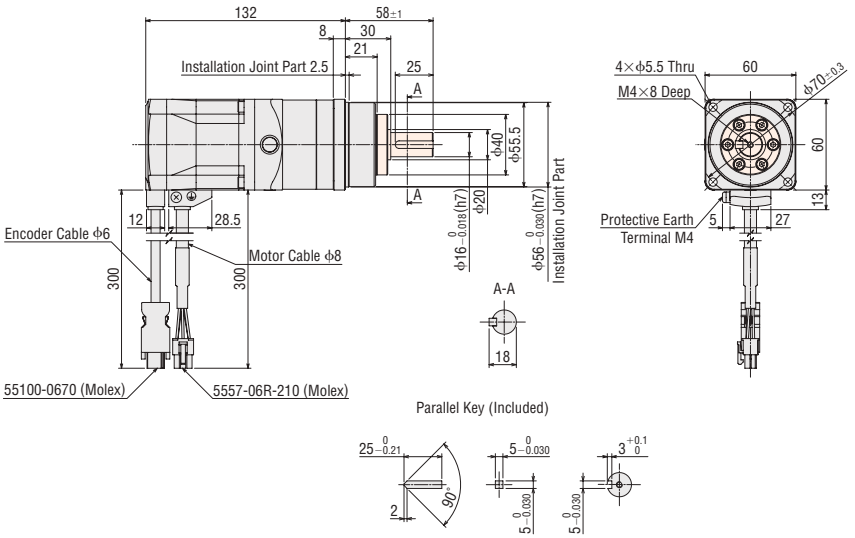

Frame Size 90 mm

2D & 3D CAD

Product Name	Gear Ratio	Mass kg	2D CAD
AZM98AC-HP■	**5, 15**	4.8	B1187

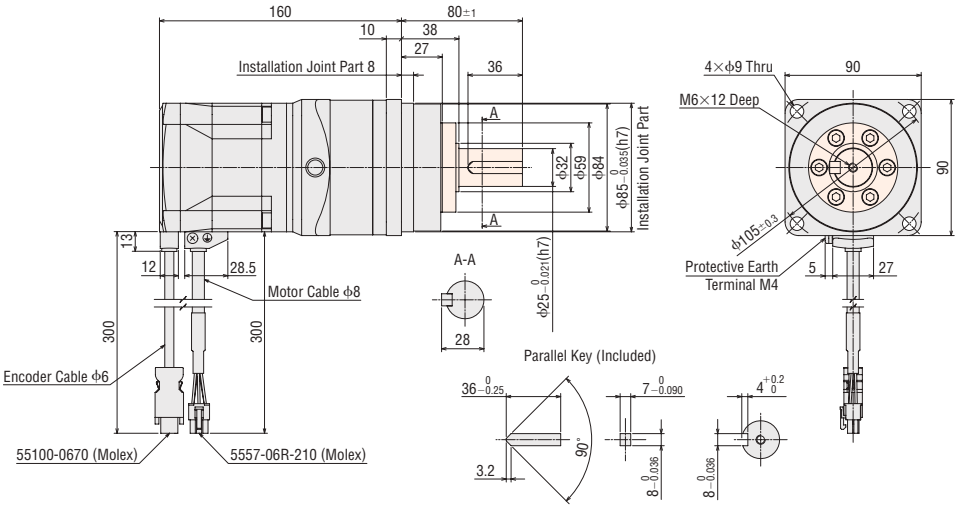

● The ▭ colored section for the dimensions indicates the rotating part.
● A number indicating the gear ratio is entered where the box ■ is located within the product name.

◇**HPG** Geared Type Flange Output Type

Frame Size 40 mm

2D & 3D CAD

Product Name	Gear Ratio	Mass kg	2D CAD
AZM46AC-HP□F	**5, 9**	0.66	B1164

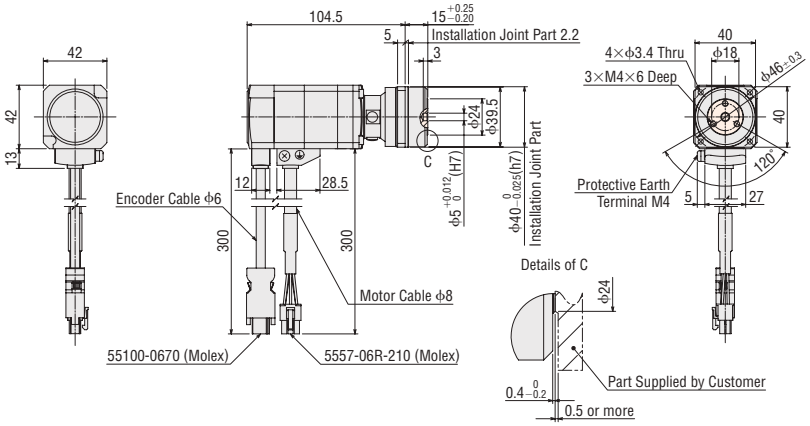

Frame Size 60 mm

2D & 3D CAD

Product Name	Gear Ratio	Mass kg	2D CAD
AZM66AC-HP□F	**5, 15**	1.8	B1166

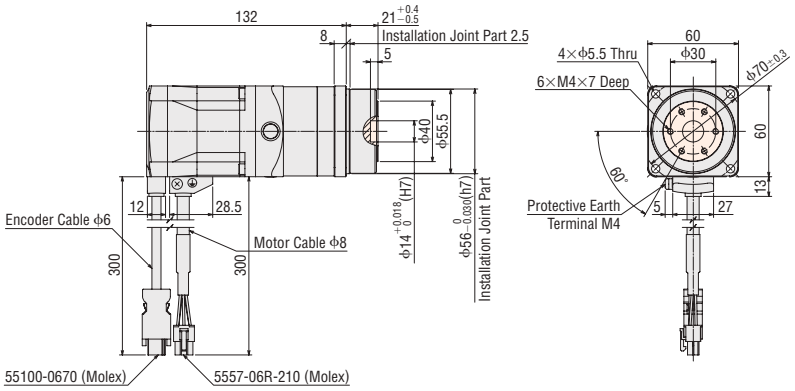

Frame Size 90 mm

2D & 3D CAD

Product Name	Gear Ratio	Mass kg	2D CAD
AZM98AC-HP□F	**5**	4.5	B1188
	15	4.4	

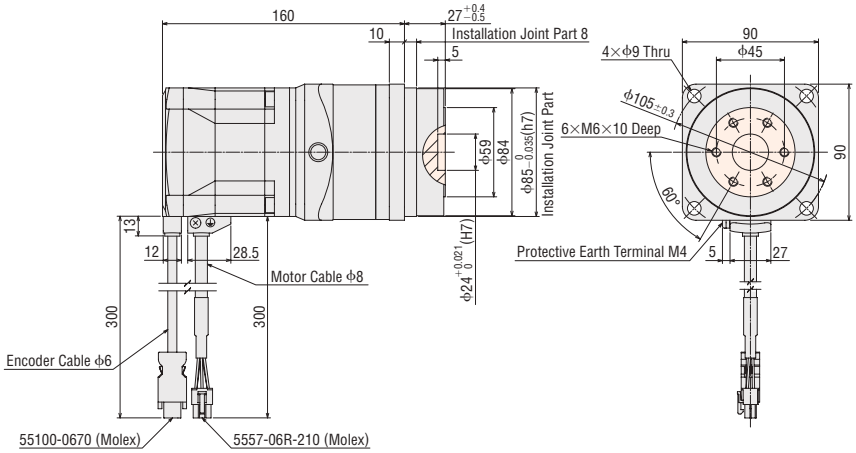

● The ▭ colored section for the dimensions indicates the rotating part.
● A number indicating the gear ratio is entered where the box ■ is located within the product name.

◇**HPG** Geared Type with Electromagnetic Brake　Shaft Output Type

Frame Size 40 mm

2D & 3D CAD

Product Name	Gear Ratio	Mass kg	2D CAD
AZM46MC-HP■	**5, 9**	0.88	B1222

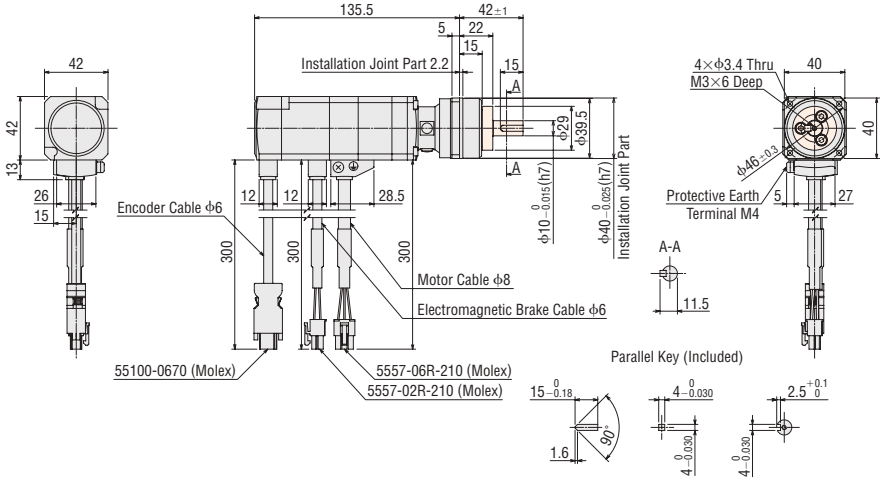

Frame Size 60 mm

2D & 3D CAD

Product Name	Gear Ratio	Mass kg	2D CAD
AZM66MC-HP■	**5, 15**	2.3	B1224

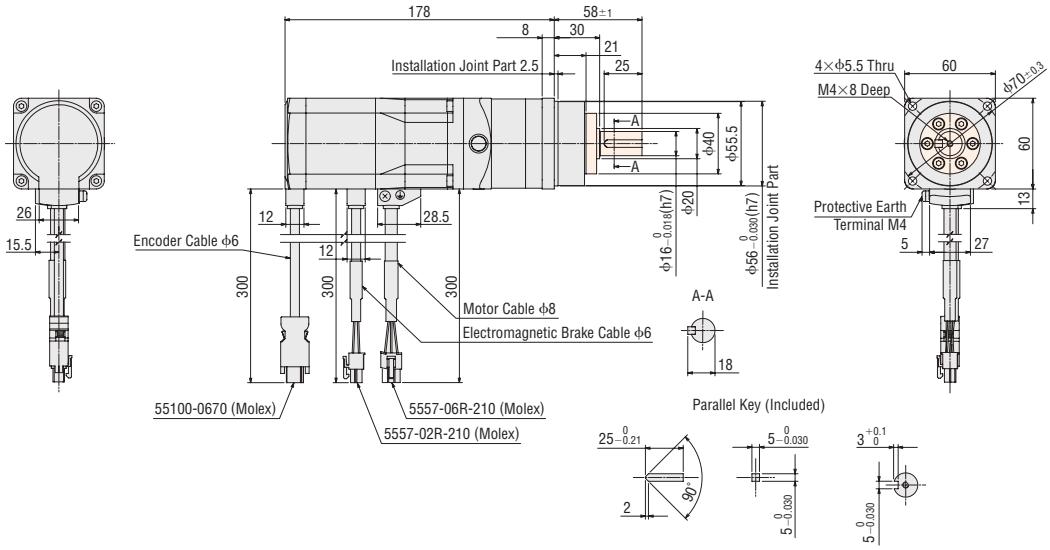

● The ▭ colored section for the dimensions indicates the rotating part.
● A number indicating the gear ratio is entered where the box ■ is located within the product name.

Frame Size 90 mm

2D & 3D CAD

Product Name	Gear Ratio	Mass kg	2D CAD
AZM98MC-HP■	**5, 15**	5.4	B1193

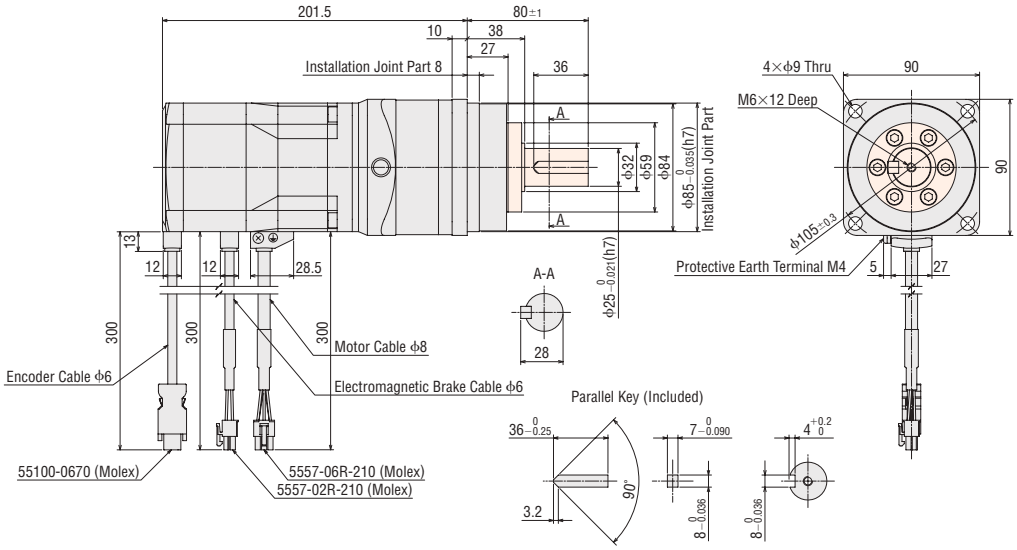

◇**HPG** Geared Type with Electromagnetic Brake Flange Output Type

Frame Size 40 mm

2D & 3D CAD

Product Name	Gear Ratio	Mass kg	2D CAD
AZM46MC-HP■F	**5, 9**	0.83	B1223

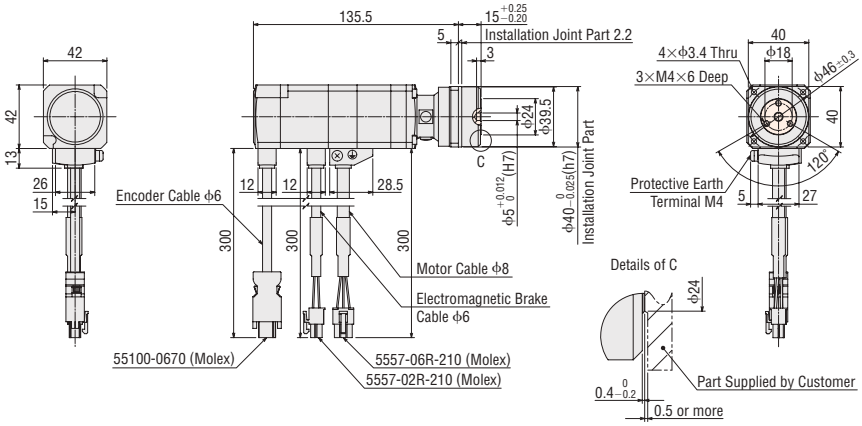

Frame Size 60 mm

2D & 3D CAD

Product Name	Gear Ratio	Mass kg	2D CAD
AZM66MC-HP■F	**5, 15**	2.2	B1225

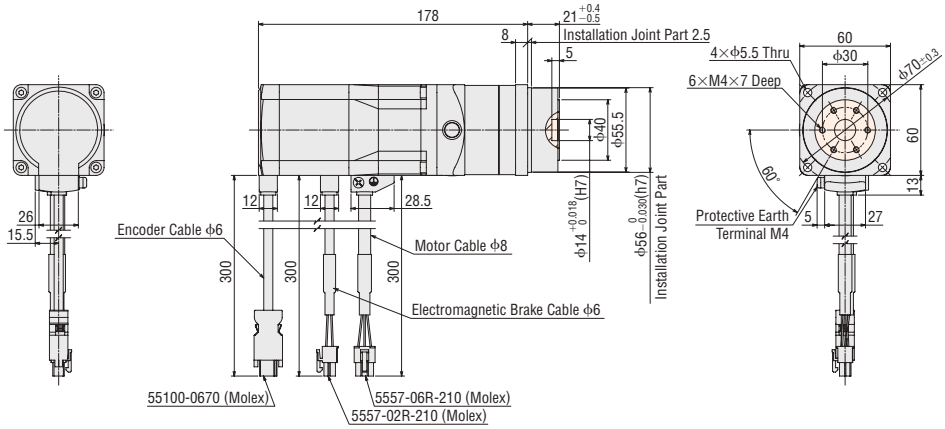

● The ▭ colored section for the dimensions indicates the rotating part.
● A number indicating the gear ratio is entered where the box ■ is located within the product name.

Frame Size 90 mm

2D & 3D CAD

Product Name	Gear Ratio	Mass kg	2D CAD
AZM98MC-HP■F	**5**	5.1	B1194
	15	5	

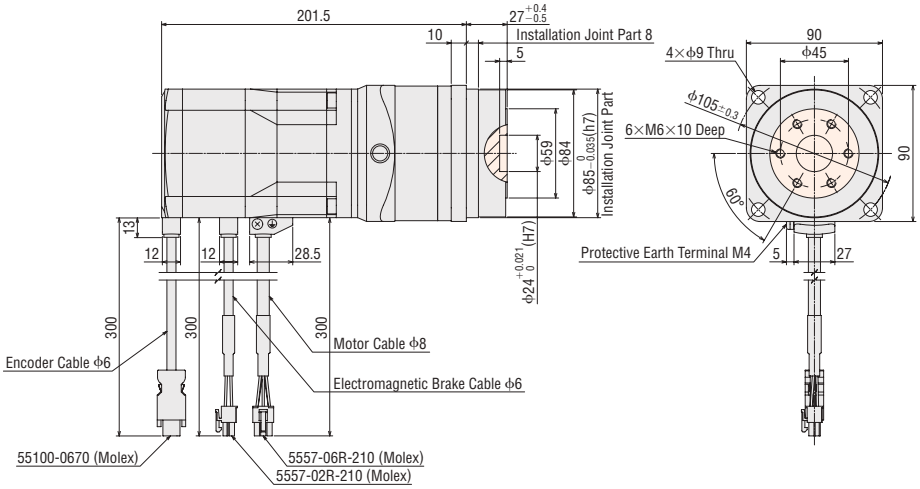

◇Harmonic Geared Type

Frame Size 42 mm

2D & 3D CAD

Product Name	Gear Ratio	Mass kg	2D CAD
AZM46AC-HS■	**50, 100**	0.65	B1167

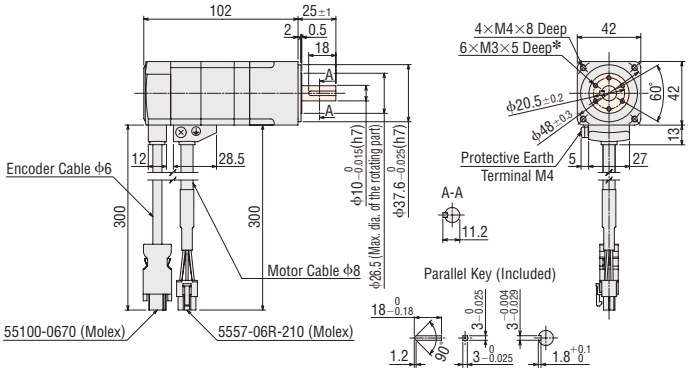

*On the dimensions, you cannot designate the positions of the output shaft and screw holes. Therefore, develop a design by using the size of the screw holes on the surface to which load is applied.

Frame Size 60 mm

2D & 3D CAD

Product Name	Gear Ratio	Mass kg	2D CAD
AZM66AC-HS■	**50, 100**	1.4	B1168

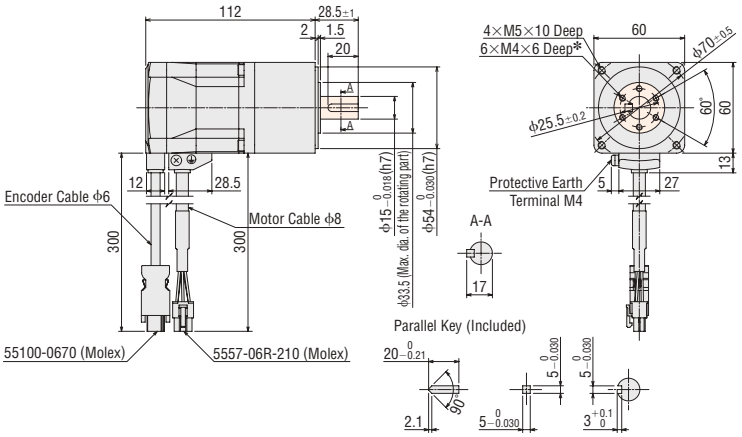

*On the dimensions, you cannot designate the positions of the output shaft and screw holes. Therefore, develop a design by using the size of the screw holes on the surface to which load is applied.

● The ▭ colored section for the dimensions indicates the rotating part.
● A number indicating the gear ratio is entered where the box ■ is located within the product name.

Frame Size 90 mm

2D & 3D CAD

Product Name	Gear Ratio	Mass kg	2D CAD
AZM98AC-HS□	**50, 100**	3.9	B1189

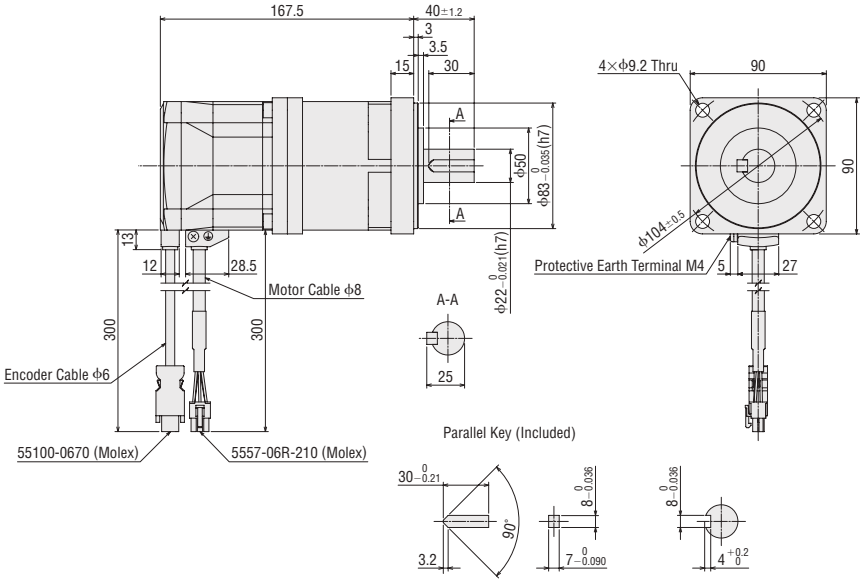

◇Harmonic Geared Type with Electromagnetic Brake

Frame Size 42 mm

2D & 3D CAD

Product Name	Gear Ratio	Mass kg	2D CAD
AZM46MC-HS□	**50, 100**	0.82	B1226

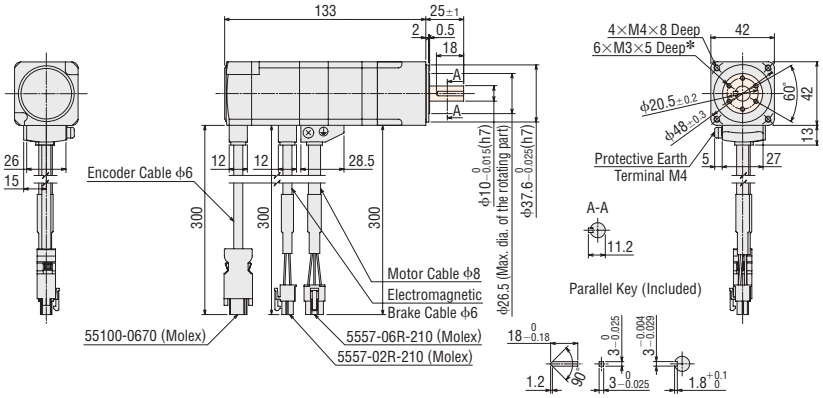

*On the dimensions, you cannot designate the positions of the output shaft and screw holes. Therefore, develop a design by using the size of the screw holes on the surface to which load is applied.

Frame Size 60 mm

2D & 3D CAD

Product Name	Gear Ratio	Mass kg	2D CAD
AZM66MC-HS□	**50, 100**	1.8	B1227

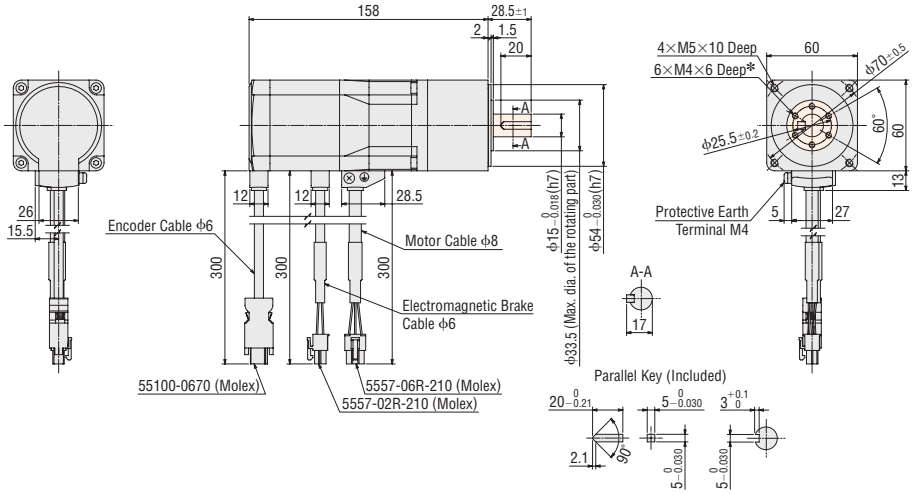

*On the dimensions, you cannot designate the positions of the output shaft and screw holes. Therefore, develop a design by using the size of the screw holes on the surface to which load is applied.

- The ▭ colored section for the dimensions indicates the rotating part.
- A number indicating the gear ratio is entered where the box □ is located within the product name.

Frame Size 90 mm

2D & 3D CAD

Product Name	Gear Ratio	Mass kg	2D CAD
AZM98MC-HS□	**50, 100**	4.5	B1195

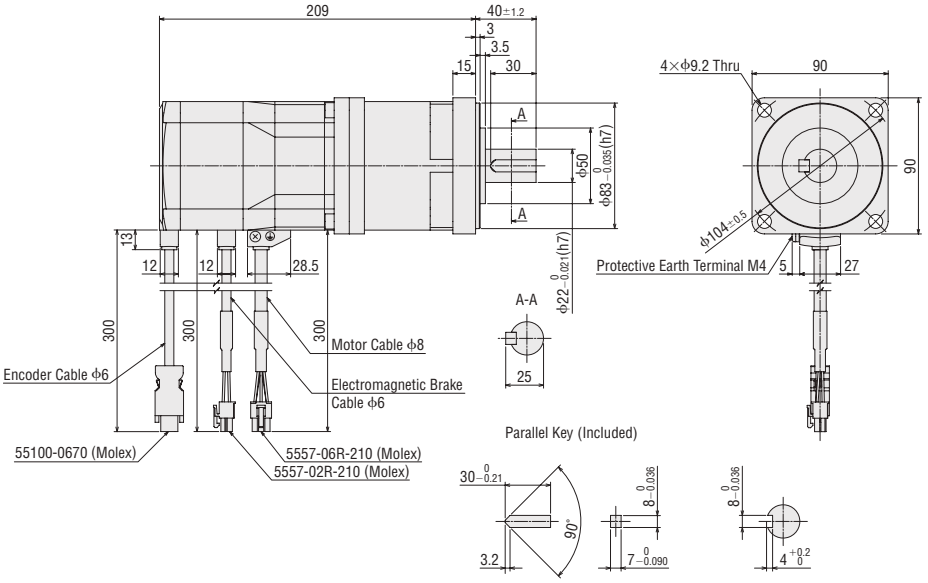

●A number indicating the gear ratio is entered where the box □ is located within the product name.

●Drivers

2D & 3D CAD

Type	Product Name	Mass kg	2D CAD
Built-in Controller Type	**AZD-AD, AZD-CD**	0.65	B1095
Pulse Input Type with RS-485 Communication	**AZD-AX, AZD-CX**		
Pulse Input Type	**AZD-A, AZD-C**		B1097

●The dimensions below is the drawing of a built-in controller type. The external dimensions and accessories are common to all driver types.

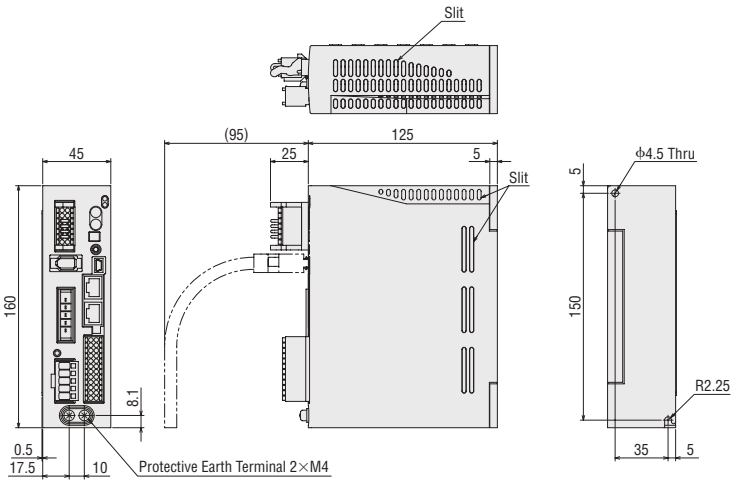

●Accessories

Connector for the Main Power Supply and Regeneration Resistor (CN4)
Connector: 05JFAT-SAXGDK-H5.0
(J.S.T.MFG.CO.,LTD.)
Connector wiring lever

I/O Signals Connector (CN5)
Connector: DFMC1,5/12-ST-3,5
(PHOENIX CONTACT)

Connector for 24 VDC Power-Supply Input/Electromagnetic Brake Connection/Regeneration Resistor Thermal Input/Power Cutoff Signal I/O (CN1)
Connector: DFMC1,5/7-ST-3,5-LR
(PHOENIX CONTACT)

Connection Cable Sets/Flexible Connection Cable Sets

◇Cable for Motor

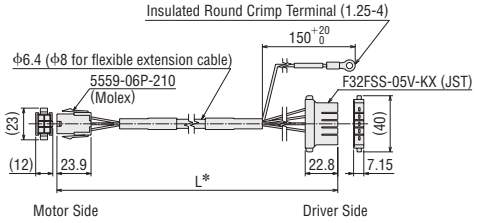

◇Cable for Electromagnetic Brake

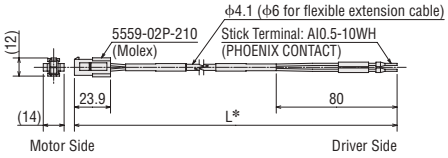

◇Cable for Encoder

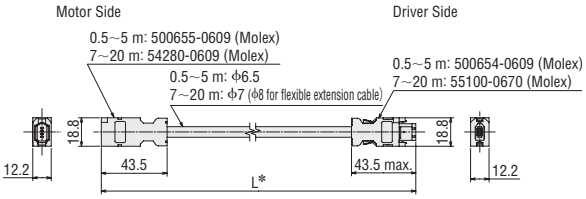

✻"L" in the above dimensions is replaced by any Length L (m) in " ■ Product Line" on page 06-18.

Note

●The motor cable and electromagnetic brake cable from the motor cannot be directly connected to a driver. To connect the motor to the driver, use a connection cable.

■Cautions for Using Connection Cables

When using connection cables, make sure you follow the instructions below.

●When inserting the connector

Be sure to hold the connector and firmly insert it straight into the socket.

Inserting the connector at an angle may damage the terminal or result in a bad connection.

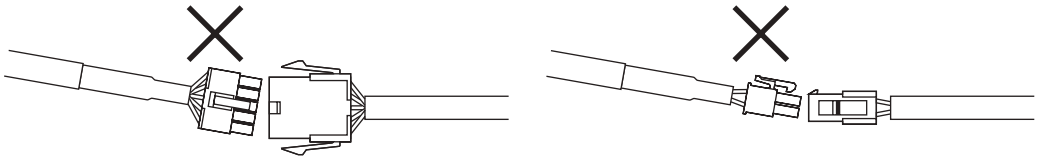

●When Disconnecting the Connector

While releasing the lock of the connector, pull it out straight.

Pulling the cable (lead wire) may damage the connector.

●Bending Radius of Cables

The bending radius of the cable, use at least 6 times min. of the cable diameter.

For lead wire types, make sure that the bending radius of the lead wire that you use is at least 4 times larger than the lead wire diameter.

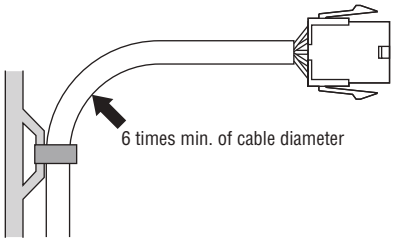

●Method for Fixing the Cable

When fixing the cable, fix a part near the connector to avoid stress on the connector.

Take measures such as using wide clamps and fixing two parts of the cable to avoid stress on the connector.

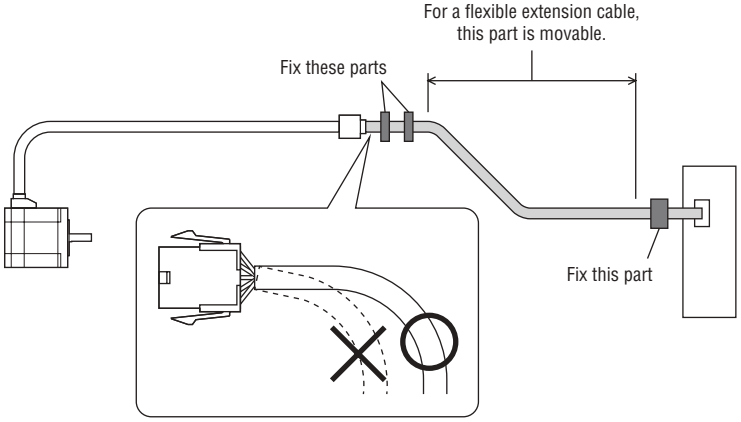

Connection and Operation (Built-in controller type/Pulse input type with RS-485 communication)

Names and Functions of Driver Parts

Below is a photo of the built-in controller type.

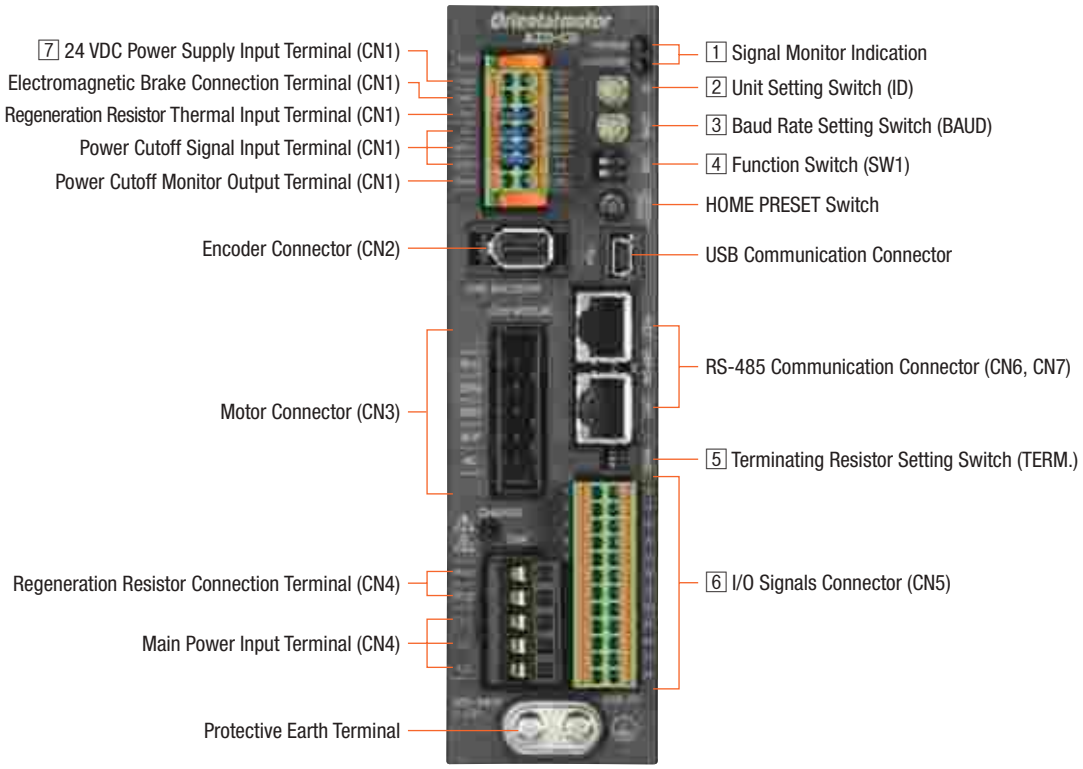

1 Signal Monitor Indication

◇LED Indicators

Indication	Color	Function	Lighting Condition
PWR	Green	Power supply indication	When 24 VDC power supply is input
ALM	Red	Alarm indication	When a protective function is activated (blinking)
C-DAT	Green	Communication indication	When communication data is being sent or received
C-ERR	Red	Communication error indication	When communication data is in error

2 Unit Setting Switch

Indication	Function
ID	Set this when you use RS-485 communication. Set the unit number. (Factory setting) Built-in controller type: 0 Pulse input type with RS-485 communication: 1

3 Baud Rate Setting Switch

Indication	Function
BAUD	Set this when you use RS-485 communication. Set the baud rate. (Factory setting) Built-in controller type: 7 Pulse input type with RS-485 communication: 4

4 Function Switch

Indication	No.	Function
SW1	1	Use in combination with the unit setting switch (ID) to set the axis number. (Factory setting) OFF
	2	Set the RS-485 communication protocol. (Factory setting) Built-in controller type: OFF Pulse input type with RS-485 communication: ON

◇RS-485 Baud Rate Setting

No.	Baud Rate (bps)
0	9600
1	19200
2	38400
3	57600
4	115200
5	230400
6	Not used
7	Network converter
8~F	Not used

5 Terminating Resistor Setting Switch

Indication	No.	Function
TERM.	1	Set the terminating resistor (120 Ω) for RS-485 communication (Factory setting: OFF).
	2	OFF: Terminating resistor not used ON: Terminating resistor used

● Configure both No. 1 and No. 2 to the same setting.

6 I/O Signals Connector (CN5)

For the pulse input type with RS-485 communication, No. 1, 2, 13, and 14 pins are dedicated to pulse input. For wire connection with programmable controller, refer to "Pulse Input Type" on Page 06-63.

Indication	Pin No.	Driver Type	Signal Name	Description	
CN5	1	Built-in Controller Type	IN0	START	This signal is used to start positioning operation.
		Pulse Input Type with RS-485 Communication	CW+* [PLS+]	CW Pulse Input + [Pulse Input +]	This is the pulse signal that is input to operate the motor in the CW direction in the 2-pulse input method. The input method in the [ ] applies to the 1-pulse input method.
	2	Built-in Controller Type	IN2	M1	Uses the 3 bits, between M0, M1 and M2, to select the operating data number.
		Pulse Input Type with RS-485 Communication	CCW+* [DIR+]	CCW Pulse Input + [Rotation Direction Input +]	This is the pulse signal that is input to operate the motor in the CCW direction in the 2-pulse input method. The input method in the [ ] applies to the 1-pulse input method.
	3	Common	IN4	ZHOME	Moves to home that has been set with the HOME/PRESET switch.
	4	Common	IN6	STOP	Stops the motor.
	5	Common	IN-COM [0-7]*	IN0～IN7 Input Common	
	6	Common	IN8	FW-JOG	Starts the JOG operation.
	7	Common	OUT0	HOME-END	When home position has been established, it will be output when the high-speed return-to-home operation is completed.
	8	Common	OUT2	PLS-RDY	Not used.
	9	Common	OUT4	MOVE	Output during motor operation.
	10	Common	OUT-COM*	Output Common	
	11	Common	ASG+	A-Phase Pulse Output +	
	12	Common	BSG+	B-Phase Pulse Output +	
	13	Built-in controller type	IN1	M0	Uses the 3 bits, between M0, M1 and M2, to select the operating data number.
		Pulse input type with RS-485 communication	CW−* [PLS−]	CW Pulse Input − [Pulse Input −]	This is the pulse signal that is input to operate the motor in the CW direction in the 2-pulse input method. The input method in the [ ] applies to the 1-pulse input method.
	14	Built-in controller type	IN3	M2	Uses the 3 bits, between M0, M1 and M2, to select the operating data number.
		Pulse input type with RS-485 communication	CCW−* [DIR−]	CCW Pulse Input − [Rotation Direction Input −]	This is the pulse signal that is input to operate the motor in the CCW direction in the 2-pulse input method. The input method in the [ ] applies to the 1-pulse input method.
	15	Common	IN5	FREE	Stops motor excitation.
	16	Common	IN7	ALM-RST	Resets the alarms.
	17	Common	IN-COM [8-9]*	IN8, IN9 Input Common	
	18	Common	IN9	RV-JOG	Starts the JOG operation.
	19	Common	OUT1	IN-POS	Outputs when the motor operation is finished.
	20	Common	OUT3	READY	Outputs when the driver is ready for operation.
	21	Common	OUT5	ALM-B	Outputs the alarm status of the driver (Normal close).
	22	Common	GND*	Ground	
	23	Common	ASG−	A-Phase Pulse Output −	
	24	Common	BSG−	B-Phase Pulse Output −	

● You can set functions to assign by using parameters. Initial values are shown above. For details, refer to "Functions" in the Operating Manual of the **AZ** Series.
*Initial settings cannot be changed.

7 24 VDC Power Supply Input Terminal/Electromagnetic Brake Connection Terminal/Regeneration Resistor Thermal Input Terminal/Power Cutoff Signal Input Terminal/Power Cutoff Monitor Output Terminal (CN1)

Indication	I/O	Terminal Name	Description
+24V	Input	24 VDC Power Supply Input Terminal +	The power supply for the driver control circuit. Always connect when using.
0V		24 VDC Power Supply Input Terminal −	
MB1	Output	Electromagnetic Brake Connection Terminal −	For an electromagnetic brake type motor, connect the electromagnetic brake cable line here.
MB2		Electromagnetic Brake Connection Terminal +	
TH1	Input	Regeneration Resistor Thermal Input Terminal	Connect the accessory regeneration resistor (**RGB100**). When not connecting a regeneration resistor, short these 2 terminals to each other.
TH2		Regeneration Resistor Thermal Input Terminal	
HWTO1+	Input	Power Cutoff Signal Input Terminal 1 +	Connect the switches and the programmable controller. If either the HWTO1 input or HWTO2 input is OFF, power supply to the motor will be cut off directly with hardware, without passing through the CPU.
HWTO1−		Power Cutoff Signal Input Terminal 1 −	
HWTO2+		Power Cutoff Signal Input Terminal 2 +	
HWTO2−		Power Cutoff Signal Input Terminal 2 −	
EDM+	Output	Power Cutoff Monitor Output Terminal +	Connects the programmable controller. If both the HWTO1 input and HWTO2 input are OFF, EDM output will be turned to ON.
EDM−		Power Cutoff Monitor Output Terminal −	

Click Here
For more information, please visit ORIENTAL MOTOR Website:
https://www.orientalmotor.com.sg/om/tp/index.html

Connection Diagram

◇Connections with Peripheral Equipment

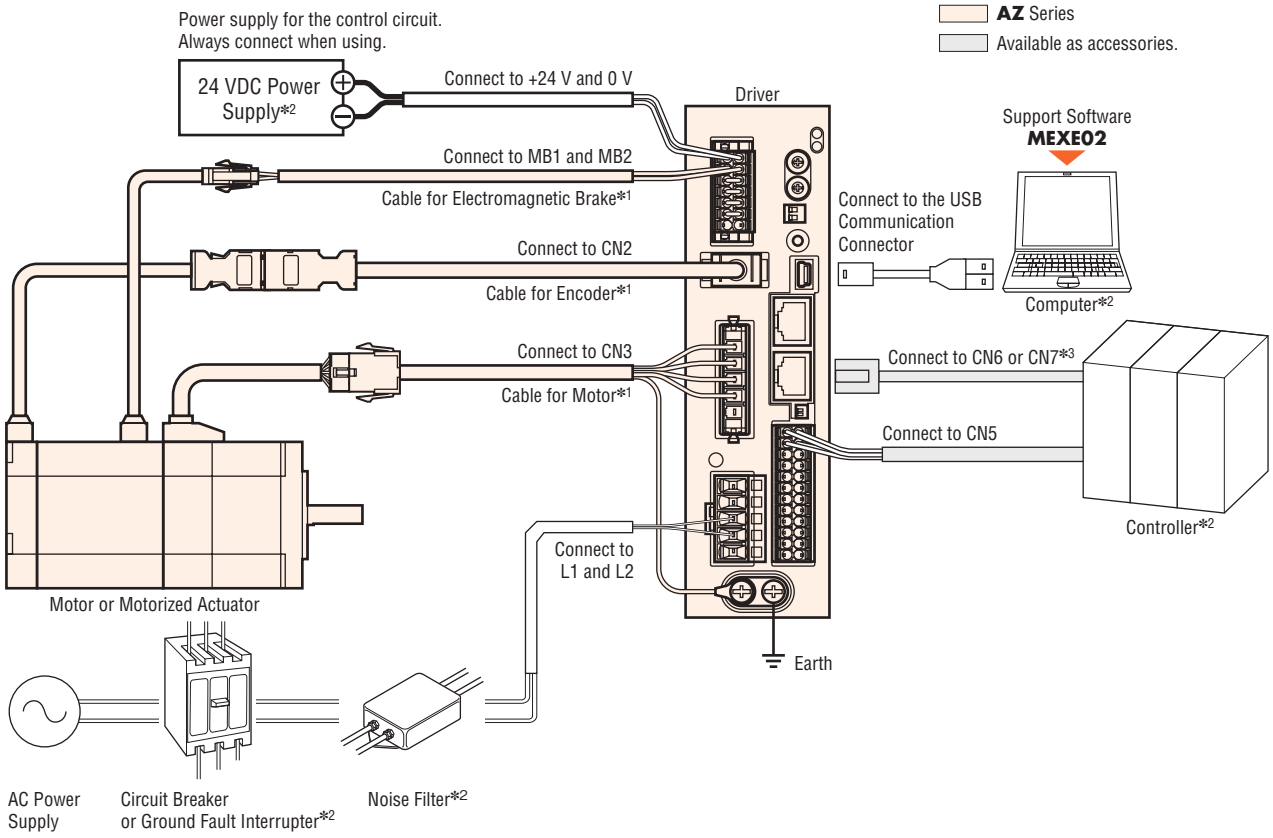

*1 Keep the wiring distance between the motor and driver to 20 m or less.
*2 Not supplied.
*3 Connect to the controller when controlling by RS-485 communication.

◇Connecting the Main Power Supply

The connection method varies depending on power supply specifications.

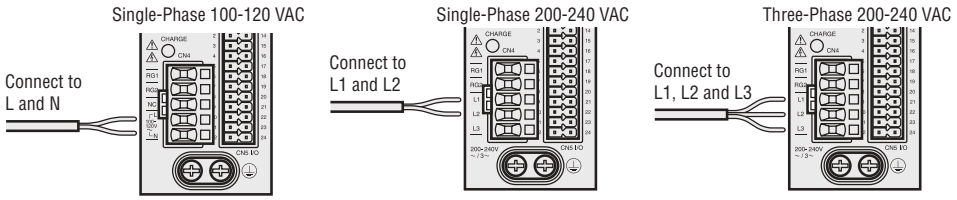

◇Connection of the USB Cable

Use this USB cable to connect the driver to the computer on which the support software **MEXE02** is installed.
Use a USB cable with the following specifications.

Specifications	USB2.0 (Full speed)
Cable	Length: 3 m or less
	Configuration: A to mini B

◇Connecting to Programmable Controller (Built-in controller type)

•Connection Diagram for Connection with Current Sink Output Circuit

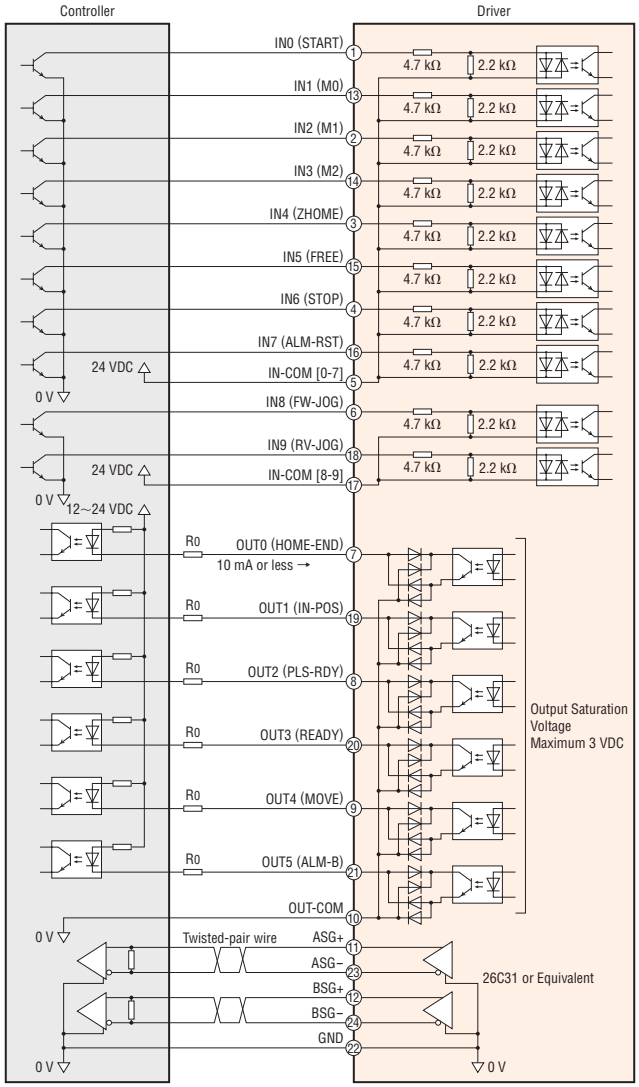

Note

- Use 24 VDC for the input signals.
- Use 12~24 VDC, 10 mA or less for the output signals. When the current value exceeds 10 mA, connect the external resistor R_0 to reduce the current to 10 mA or below.
- Provide a distance of 200 mm or longer between the signal lines and power lines (power supply lines, motor lines).
  Do not run the signal lines in the same piping as power lines or bundle them with power lines.
- If noise generated by the motor cable or power supply cable causes a problem with the specific wiring or layout, shield the cable or use ferrite cores.

•Connection Diagram for Connection with Current Source Output Circuit

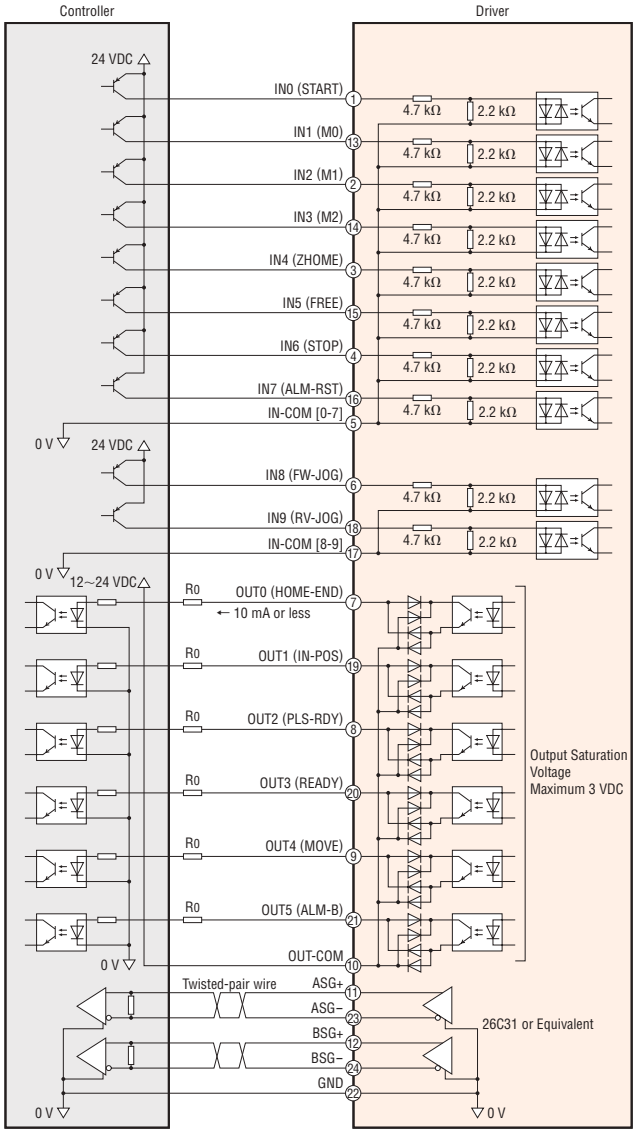

Note

- Use 24 VDC for the input signals.
- Use 12~24 VDC, 10 mA or less for the output signals. When the current value exceeds 10 mA, connect the external resistor R_0 to reduce the current to 10 mA or below.
- Provide a distance of 200 mm or longer between the signal lines and power lines (power supply lines, motor lines).
  Do not run the signal lines in the same piping as power lines or bundle them with power lines.
- If noise generated by the motor cable or power supply cable causes a problem with the specific wiring or layout, shield the cable or use ferrite cores.

◇Connecting to the Programmable Controller (Pulse input type with RS-485 communication)

The connection diagram is similar to that of the pulse input type. Refer to page 06-63.

Connection and Operation (Pulse input type)

Names and Functions of Driver Parts

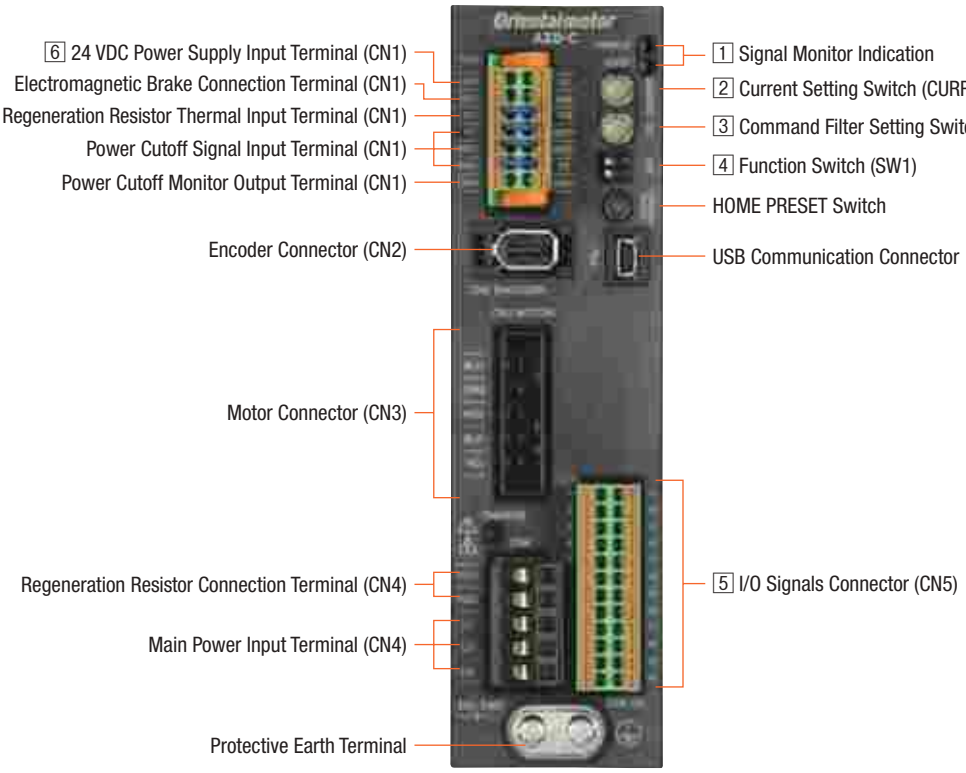

1 Signal Monitor Indication

◇LED Indicators

Indication	Color	Function	Lighting Condition
PWR	Green	Power supply indication	When 24 VDC power supply is input
ALM	Red	Alarm indication	When a protective function is activated (blinking)
READY	Green	READY output	When READY output is ON

2 Current Setting Switch

Indication	Function
CURRENT	Set the base current, which is the basis of the running current and the standstill current (Factory setting: F).

3 Command Filter Setting Switch

Indication	Function
FIL	Adjust the responsiveness of the motor (Factory setting: 1).

4 Function Switch

Indication	No.	Function
SW1	1	Sets the resolution per one rotation of the motor output shaft (Factory setting: OFF [1000 p/r]).
	2	Sets the pulse input mode as either 1-pulse input mode or 2-pulse input mode (Factory setting: OFF [2-pulse input mode]).

5 I/O Signals Connector (CN5)

Indication	Pin No.	Signal Name		Description
CN5	1	CW+ [PLS+]*	CW Pulse Input + [Pulse Input +]	This is the pulse signal that is input to operate the motor in the CW direction in the 2-pulse input method. The input method in the [ ] applies to the 1-pulse input method.
	2	CCW+ [DIR+]*	CCW Pulse Input + [Rotation Direction Input +]	This is the pulse signal that is input to operate the motor in the CCW direction in the 2-pulse input method. The input method in the [ ] applies to the 1-pulse input method.
	3	IN4	ZHOME	Moves to home that has been set with the HOME/PRESET switch.
	4	IN6	STOP	Stops the motor.
	5	IN-COM [4-7]*	IN4~IN7 Input Common	
	6	IN8	FW-JOG	Starts the JOG operation.
	7	OUT0	HOME-END	When home position has been established, it will be output when the high-speed return-to-home operation is completed.
	8	OUT2	PLS-RDY	Output when the pulse input preparation is completed.
	9	OUT4	MOVE	Output during motor operation.
	10	OUT-COM*	Output Common	
	11	ASG+	A-Phase Pulse Output +	
	12	BSG+	B-Phase Pulse Output +	
	13	CW− [PLS-]*	CW Pulse Input − [Pulse Input −]	This is the pulse signal that is input to operate the motor in the CW direction in the 2-pulse input method. The input method in the [ ] applies to the 1-pulse input method.
	14	CCW− [DIR-]*	CCW Pulse Input − [Rotation Direction Input −]	This is the pulse signal that is input to operate the motor in the CCW direction in the 2-pulse input method. The input method in the [ ] applies to the 1-pulse input method.
	15	IN5	FREE	Stops motor excitation.
	16	IN7	ALM-RST	Resets the alarms.
	17	IN-COM [8-9]*	IN8, IN9 Input Common	
	18	IN9	RV-JOG	Starts the JOG operation.
	19	OUT1	IN-POS	Outputs when the motor operation is finished.
	20	OUT3	READY	Outputs when the driver is ready for operation.
	21	OUT5	ALM-B	Outputs the alarm status of the driver (Normal close).
	22	GND*	Ground	
	23	ASG−	A-Phase Pulse Output −	
	24	BSG−	B-Phase Pulse Output −	

● You can set functions to assign by using parameters. Initial values are shown above. For details, refer to "Functions" in the Operating Manual of the **AZ** Series.
*Initial settings cannot be changed.

6 24 VDC Power Supply Input Terminal/Electromagnetic Brake Connection Terminal/Regeneration Resistor Thermal Input Terminal/Power Cutoff Signal Input Terminal/Power Cutoff Monitor Output Terminal (CN1)

Indication	I/O	Terminal Name	Description
+24V	Input	24 VDC Power Supply Input Terminal +	The power supply for the driver control circuit. Always connect when using.
0V		24 VDC Power Supply Input Terminal −	
MB1	Output	Electromagnetic Brake Connection Terminal −	For an electromagnetic brake type motor, connect the electromagnetic brake cable line here.
MB2		Electromagnetic Brake Connection Terminal +	
TH1	Input	Regeneration Resistor Thermal Input Terminal	Connect the accessory regeneration resistor (**RGB100**). When not connecting a regeneration resistor, short these 2 terminals to each other.
TH2		Regeneration Resistor Thermal Input Terminal	
HWTO1+	Input	Power Cutoff Signal Input Terminal 1 +	Connect the switches and the programmable controller. If either the HWT01 input or HWT02 input is OFF, power supply to the motor will be cut off directly with hardware, without passing through the CPU.
HWTO1−		Power Cutoff Signal Input Terminal 1 −	
HWTO2+		Power Cutoff Signal Input Terminal 2 +	
HWTO2−		Power Cutoff Signal Input Terminal 2 −	
EDM+	Output	Power Cutoff Monitor Output Terminal +	Connects the programmable controller. If both the HWT01 input and HWT02 input are OFF, EDM output will be turned to ON.
EDM−		Power Cutoff Monitor Output Terminal −	

Connection Diagram

◇Connections with Peripheral Equipment

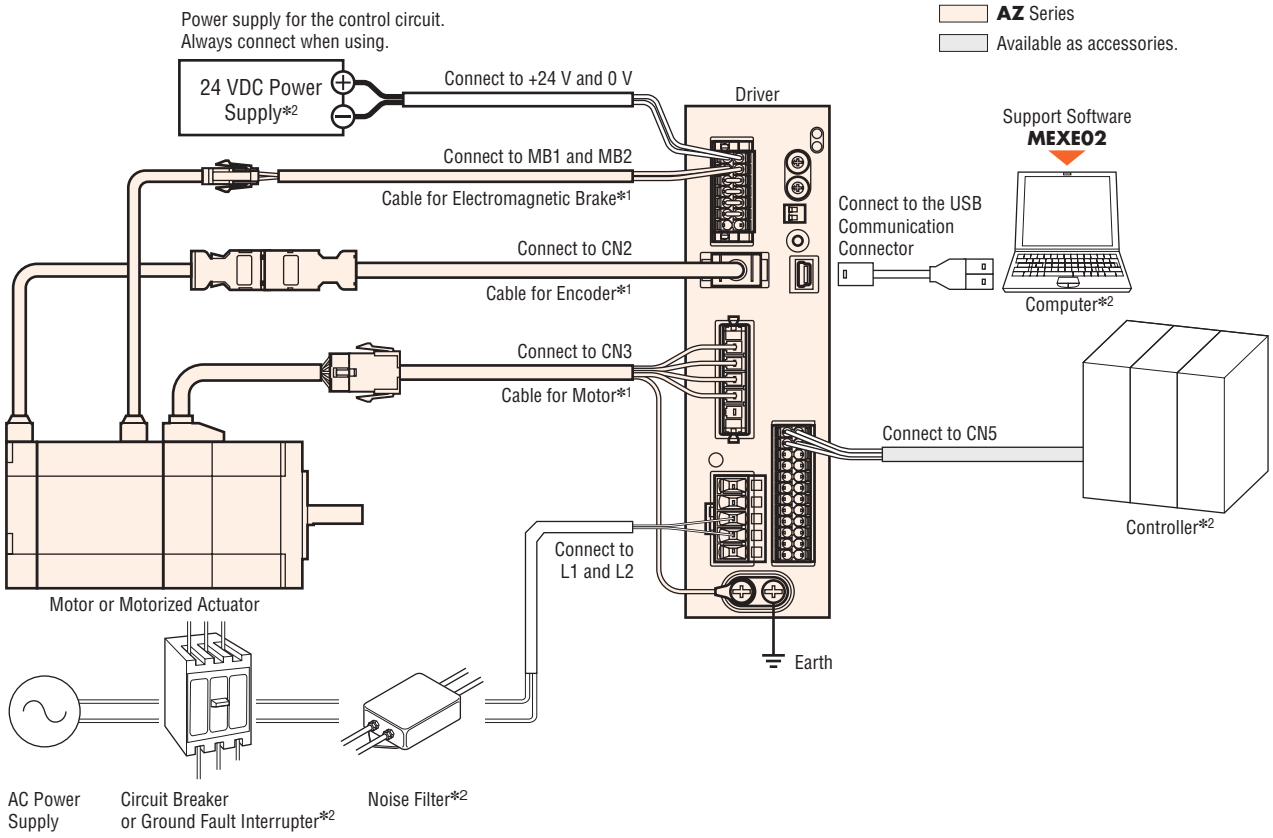

*1 Keep the wiring distance between the motor and driver to 20 m or less.
*2 Not supplied.

◇Connecting the Main Power Supply

The connection method varies depending on power supply specifications.

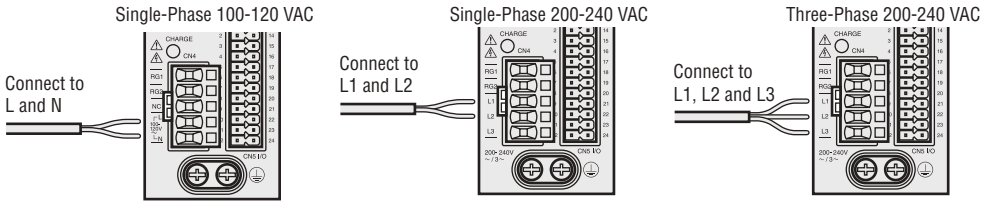

◇Connection of the USB Cable

Use this USB cable to connect the driver to the computer on which the support software **MEXE02** is installed.
Use a USB cable with the following specifications.

Specifications	USB2.0 (Full speed)
Cable	Length: 3 m or less
	Configuration: A to mini B

◇Connecting to the Programmable Controller (Pulse input type)

•Connection Diagram for Connection with Current Sink Output Circuit

When the pulse input is the line driver

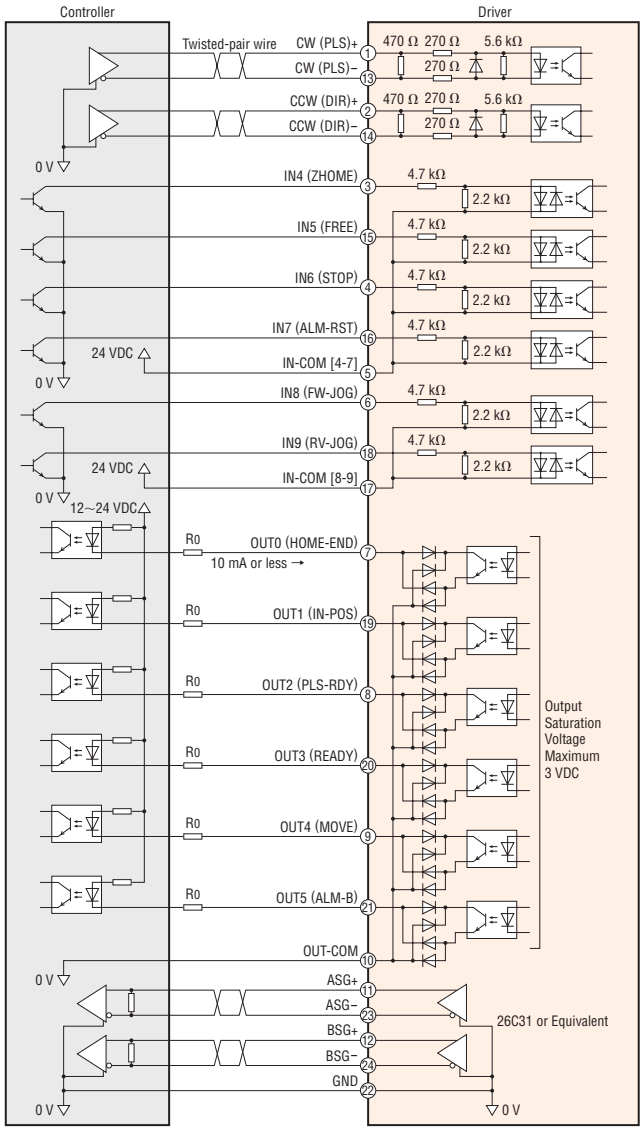

Note

- Use 24 VDC for the input signals.
- Use 12~24 VDC, 10 mA or less for the output signals. When the current value exceeds 10 mA, connect the external resistor R_0 to reduce the current to 10 mA or below.
- Provide a distance of 200 mm or longer between the signal lines and power lines (power supply lines, motor lines).
  Do not run the signal lines in the same piping as power lines or bundle them with power lines.
- If noise generated by the motor cable or power supply cable causes a problem with the specific wiring or layout, shield the cable or use ferrite cores.

When the pulse input is the open collector

•When the pulse input signal is 5 VDC

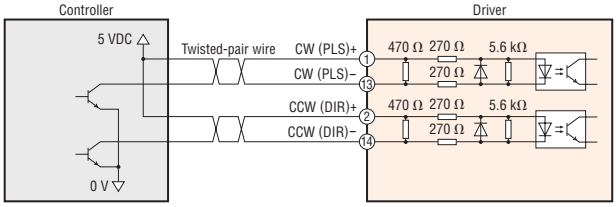

•When the pulse input signal is 24 VDC

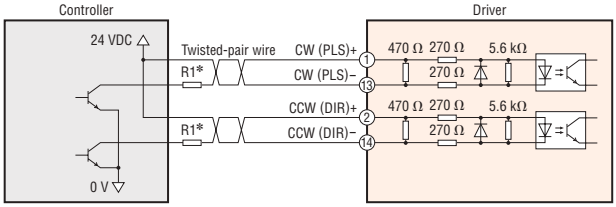

✻R_1: 1.2 kΩ~2.2 kΩ, 0.5 W or more

Note

- Use 5~24 VDC for the CW (PLS) and CCW (DIR) inputs.
  When using at 24 VDC, connect external resistor R_1 (1.2 kΩ~2.2 kΩ, 0.5 W or more).
- When using at 5 VDC, do not connect any external resistors, but directly connect a pulse input signal.

•Connection Diagram for Connection with Current Source Output Circuit

When the pulse input is the line driver

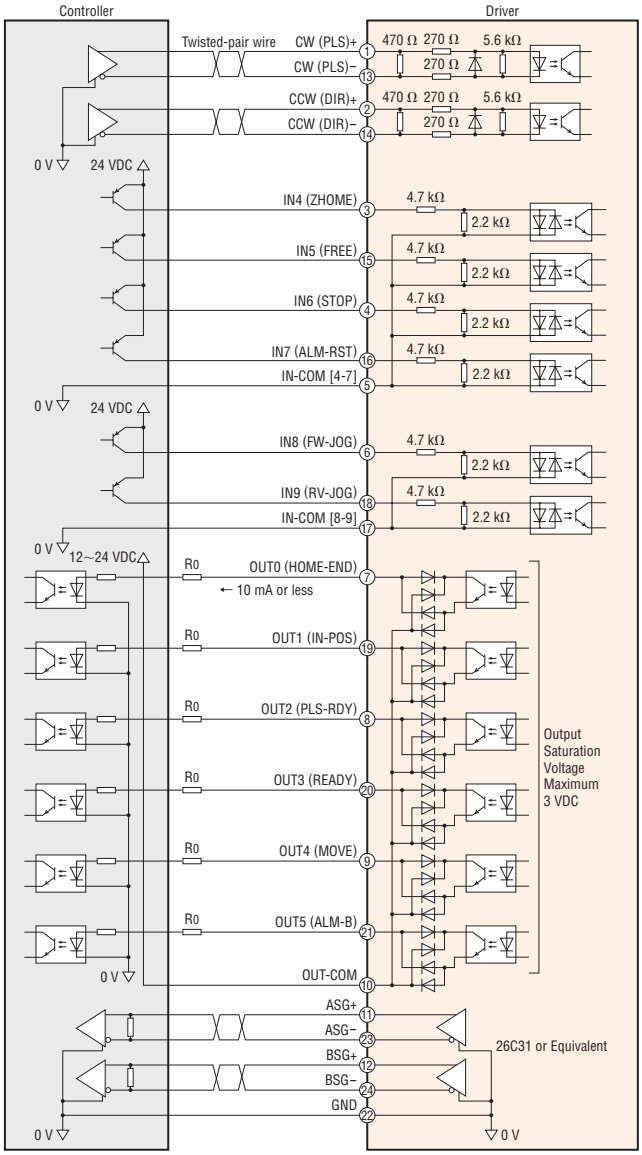

Note

- Use 24 VDC for the input signals.
- Use 12~24 VDC, 10 mA or less for the output signals. When the current value exceeds 10 mA, connect the external resistor R_0 to reduce the current to 10 mA or below.
- Provide a distance of 200 mm or longer between the signal lines and power lines (power supply lines, motor lines).
  Do not run the signal lines in the same piping as power lines or bundle them with power lines.
- If noise generated by the motor cable or power supply cable causes a problem with the specific wiring or layout, shield the cable or use ferrite cores.

When the pulse input is the open collector

•When the pulse input signal is 5 VDC

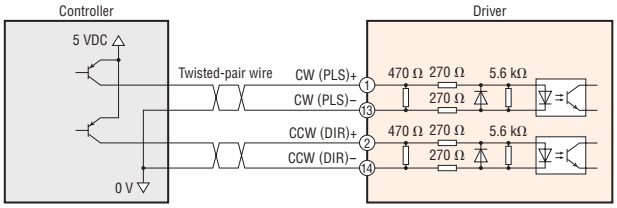

•When the pulse input signal is 24 VDC

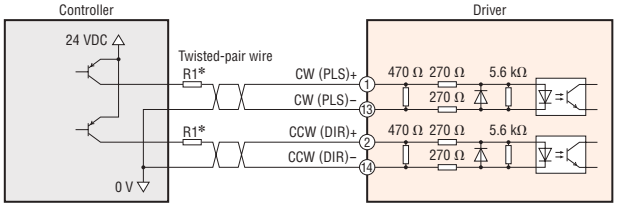

✻R_1: 1.2 kΩ~2.2 kΩ, 0.5 W or more

Note

- Use 5~24 VDC for the CW (PLS) and CCW (DIR) inputs.
  When using at 24 VDC, connect external resistor R_1 (1.2 kΩ~2.2 kΩ, 0.5 W or more).
- When using at 5 VDC, do not connect any external resistors, but directly connect a pulse input signal.

System Configuration

When a standard type motor with electromagnetic brake is combined with a built-in controller type driver or a pulse input type driver with RS-485 communication

The figure below shows a sample configuration which includes a built-in controller type driver and which uses I/O control or RS-485 communication.
The motor, driver, and connection cable set/flexible connection cable set need to be separately provided.

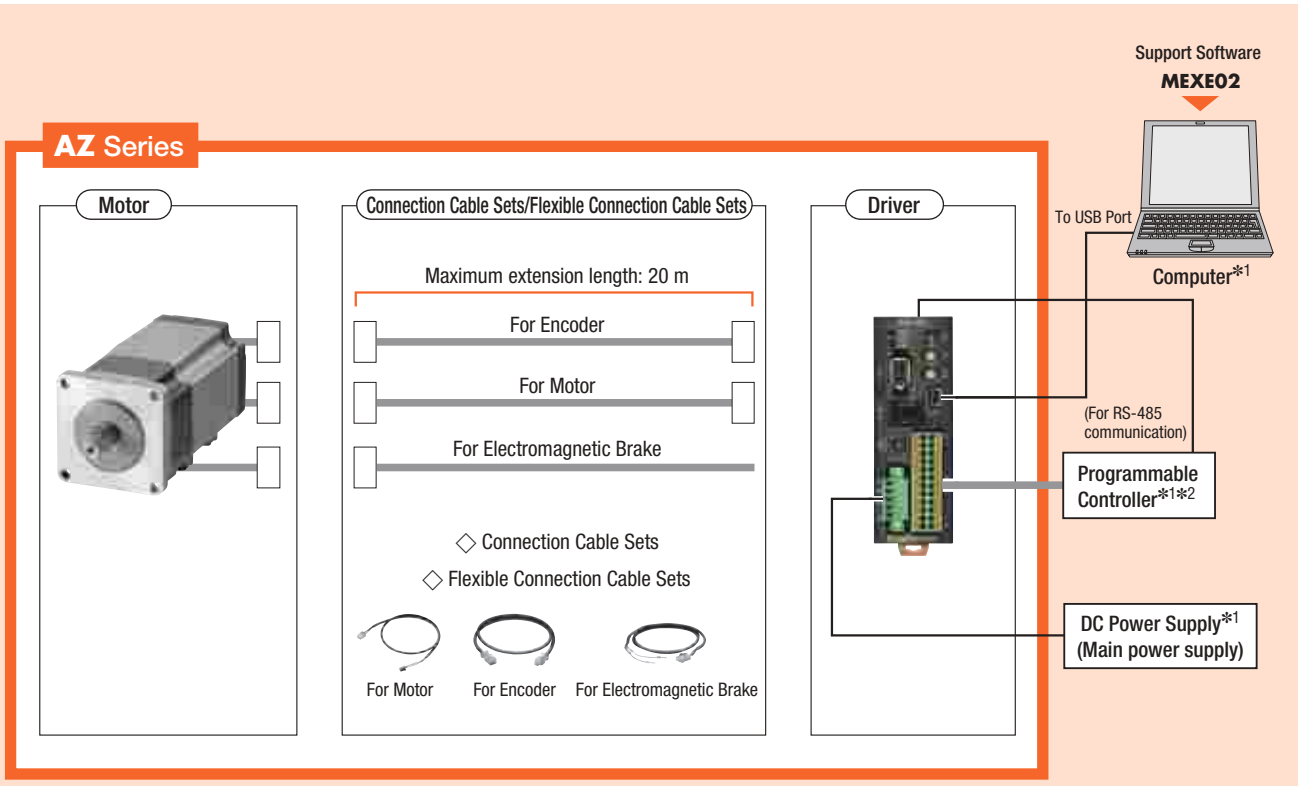

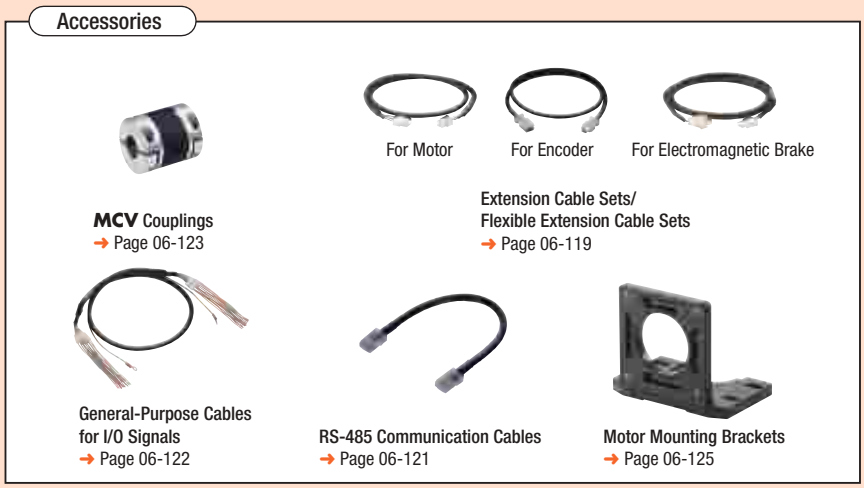

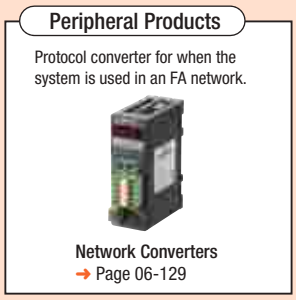

*1 Not supplied.
*2 For a pulse input type with RS-485 communication, a pulse oscillation function is required.

System Configuration Example

AZ Series			+	Sold Separately		
Motor	Driver	Connection Cable Sets		Motor Mounting Brackets	Flexible Couplings	General-Purpose Cable for I/O Signals (1 m)
AZM66MK	**AZD-KD**	**CC030VZFB2**		**PAL2P-5**	**MCV251010**	**CC16D010B-1**
SGD625	SGD488	SGD83		SGD14	SGD100	SGD25

The system configuration shown above is an example. Other combinations are available.

Note

The motor cable and electromagnetic brake cable from the motor cannot be directly connected to a driver. To connect the motor to the driver, use a connection cable.

When a standard type motor with electromagnetic brake is combined with a pulse input type driver

The figure below shows a sample configuration of a single axis system which uses a programmable controller (equipped with a pulse oscillator).
The motor, driver, and connection cable set/flexible connection cable set need to be separately provided.

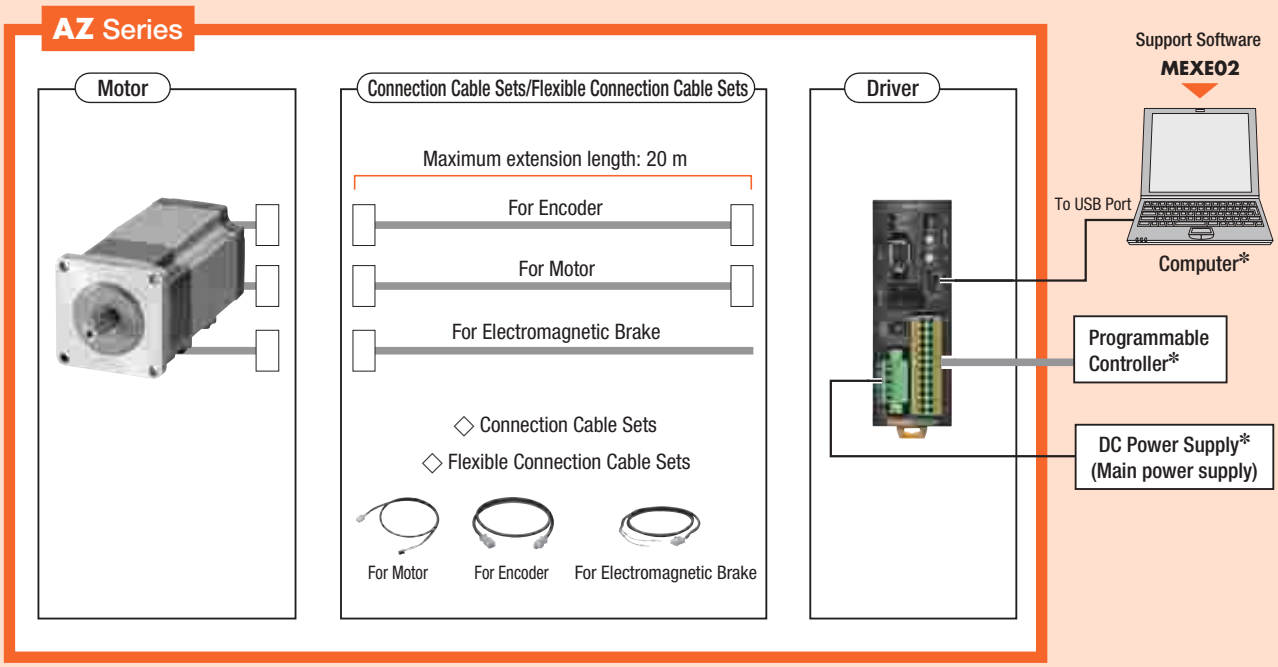

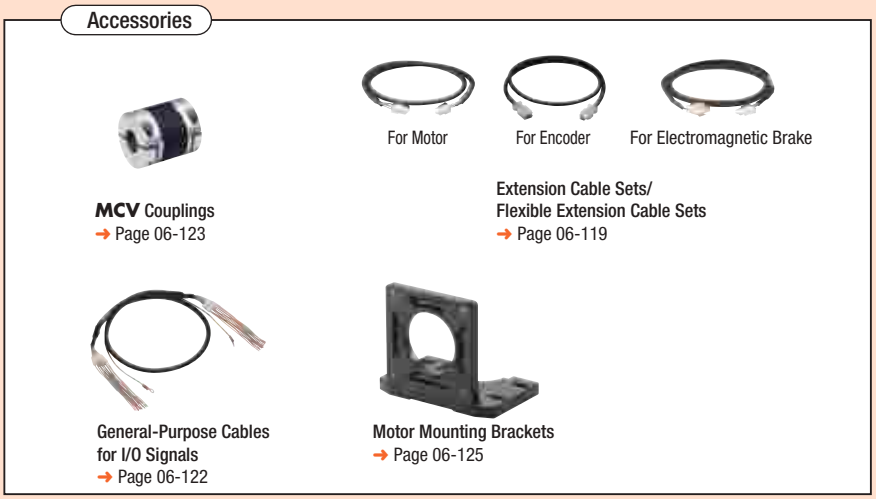

✻ Not supplied.

System Configuration Example

AZ Series				Sold Separately		
Motor	Driver	Connection Cable Sets	+	Motor Mounting Brackets	Flexible Couplings	General-Purpose Cable for I/O Signals (1 m)
AZM66MK	**AZD-K**	**CC030VZFB2**		**PAL2P-5**	**MCV251010**	**CC16D010B-1**
SGD625	SGD425	SGD83		SGD14	SGD100	SGD25

The system configuration shown above is an example. Other combinations are available.

Note

The motor cable and electromagnetic brake cable from the motor cannot be directly connected to a driver. To connect the motor to the driver, use a connection cable.

Product Number Code

Motors

◇Standard Type

AZM 6 6 A 0 K

① ② ③ ④ ⑤ ⑥

◇**PS**, **HPG**, Harmonic Geared Type

AZM 6 6 A K - HP 15 F

① ② ③ ④ ⑥ ⑦ ⑧ ⑨

①	Motor Type	**AZM**: **AZ** Series Motor
②	Motor Frame Size	**1**: 20 mm **2**: 28 mm (30 mm for the Harmonic Geared Type) **4**: 42 mm (40 mm for the **HPG** Geared Type) **6**: 60 mm
③	Motor Case Length	
④	Output Shaft Shape	**A**: Single Shaft **M**: With Electromagnetic Brake
⑤	Additional Function*	**0**: Straight **1**: With Key
⑥	Motor Specifications	**K**: DC Power Supply Input Specifications
⑦	Gear Type	**PS**: **PS** Geared Type **HP**: **HPG** Geared Type **HS**: Harmonic Geared Type
⑧	Gear Ratio	
⑨	Output Shaft Type	**HPG** Geared Type Blank: Shaft Output **F**: Flange Output

*When the name of a standard type does not contain a number representing an additional function, it is a single-sided milled type.

◇**TS** Geared Type

AZM 6 6 A K - TS 7.2 U

① ② ③ ④ ⑤ ⑥ ⑦ ⑧

①	Motor Type	**AZM**: **AZ** Series Motor
②	Motor Frame Size	**4**: 42 mm **6**: 60 mm
③	Motor Case Length	
④	Output Shaft Shape	**A**: Single Shaft **M**: With Electromagnetic Brake
⑤	Motor Specifications	**K**: DC Power Supply Input Specifications
⑥	Gear Type	**TS**: **TS** Geared Type
⑦	Gear Ratio	
⑧	Cable Drawing Direction	**U**: Upward **L**: Left **R**: Right

◇**FC** Geared Type

AZM 6 6 A K - FC 7.2 U A

① ② ③ ④ ⑤ ⑥ ⑦ ⑧ ⑨

①	Motor Type	**AZM**: **AZ** Series Motor
②	Motor Frame Size	**4**: 42 mm **6**: 60 mm
③	Motor Case Length	
④	Output Shaft Shape	**A**: Single Shaft **M**: With Electromagnetic Brake
⑤	Motor Specifications	**K**: DC Power Supply Input Specifications
⑥	Gear Type	**FC**: **FC** Geared Type
⑦	Gear Ratio	
⑧	Cable Drawing Direction*	**D**: Downward **U**: Upward
⑨	Identification	**A**: Solid Shaft

*The cable drawing direction is based on the assumption that the output shaft is at left and the gearhead is at right.

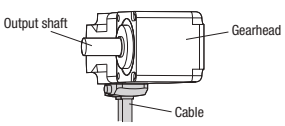

Cable direction downward

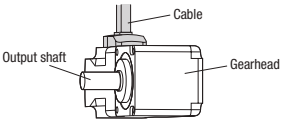

Cable direction upward

Driver

AZD - K D

① ② ③

①	Driver Type	**AZD**: **AZ** Series Driver
②	Power Supply Input	**K**: 24 VDC/48 VDC
③	Type	**D**: Built-in Controller Type **X**: Pulse Input Type with RS-485 Communication Blank: Pulse Input Type

Connection Cable Set/Flexible Connection Cable Set

CC 050 V Z □ F B 2

① ② ③ ④ ⑤ ⑥ ⑦ ⑧

①		**CC**: Cable
②	Length	**005**: 0.5 m **010**: 1 m **015**: 1.5 m **020**: 2 m **025**: 2.5 m **030**: 3 m **040**: 4 m **050**: 5 m **070**: 7 m **100**: 10 m **150**: 15 m **200**: 20 m
③	Reference Number	
④	Applied Model	**Z**: For **AZ** Series
⑤	Reference Number	Blank: For frame size 42 mm (40 mm for the **HPG** Geared Type), 60 mm **2**: For frame size 20 mm, 28 mm (30 mm for the Harmonic Geared Type)
⑥	Cable Type	**F**: Connection Cable Set **R**: Flexible Connection Cable Set
⑦	Description	Blank: For the product with no Electromagnetic Brakes **B**: For the product with Electromagnetic Brakes
⑧	Cable Specifications	**2**: DC Power Supply Input

Product Line

The motor, driver, and connection cables need to purchase separately.

Motors

◇Standard Type

Frame Size	Product Name	List Price
20 mm	**AZM14AK**	SGD313
	AZM15AK	SGD313
28 mm	**AZM24AK**	SGD313
	AZM26AK	SGD313
42 mm	**AZM46AK**	SGD340
	AZM46A0K	SGD340
	AZM48AK NEW	SGD353
	AZM48A0K NEW	SGD353
	AZM48A1K NEW	SGD365
60 mm	**AZM66AK**	SGD400
	AZM66A0K	SGD400
	AZM66A1K	SGD413
	AZM69AK	SGD406
	AZM69A0K	SGD406
	AZM69A1K	SGD419

◇Standard Type with Electromagnetic Brake

Frame Size	Product Name	List Price
42 mm	**AZM46MK**	SGD515
	AZM46M0K	SGD515
60 mm	**AZM66MK**	SGD625
	AZM66M0K	SGD625
	AZM66M1K	SGD638
	AZM69MK	SGD631
	AZM69M0K	SGD631
	AZM69M1K	SGD644

◇**TS** Geared Type

Frame Size	Product Name	List Price
42 mm	**AZM46AK-TS3.6**	SGD488
	AZM46AK-TS3.6R	SGD488
	AZM46AK-TS3.6U	SGD488
	AZM46AK-TS3.6L	SGD488
	AZM46AK-TS7.2	SGD488
	AZM46AK-TS7.2R	SGD488
	AZM46AK-TS7.2U	SGD488
	AZM46AK-TS7.2L	SGD488
	AZM46AK-TS10	SGD505
	AZM46AK-TS10R	SGD505
	AZM46AK-TS10U	SGD505
	AZM46AK-TS10L	SGD505
	AZM46AK-TS20	SGD505
	AZM46AK-TS20R	SGD505
	AZM46AK-TS20U	SGD505
	AZM46AK-TS20L	SGD505
	AZM46AK-TS30	SGD505
	AZM46AK-TS30R	SGD505
	AZM46AK-TS30U	SGD505
	AZM46AK-TS30L	SGD505
60 mm	**AZM66AK-TS3.6**	SGD574
	AZM66AK-TS3.6R	SGD574
	AZM66AK-TS3.6U	SGD574
	AZM66AK-TS3.6L	SGD574
	AZM66AK-TS7.2	SGD574
	AZM66AK-TS7.2R	SGD574
	AZM66AK-TS7.2U	SGD574
	AZM66AK-TS7.2L	SGD574
	AZM66AK-TS10	SGD591
	AZM66AK-TS10R	SGD591
	AZM66AK-TS10U	SGD591
	AZM66AK-TS10L	SGD591
	AZM66AK-TS20	SGD591
	AZM66AK-TS20R	SGD591
	AZM66AK-TS20U	SGD591
	AZM66AK-TS20L	SGD591
	AZM66AK-TS30	SGD591
	AZM66AK-TS30R	SGD591
	AZM66AK-TS30U	SGD591
	AZM66AK-TS30L	SGD591

◇**TS** Geared Type with Electromagnetic Brake

Frame Size	Product Name	List Price
42 mm	**AZM46MK-TS3.6**	SGD663
	AZM46MK-TS3.6R	SGD663
	AZM46MK-TS3.6U	SGD663
	AZM46MK-TS3.6L	SGD663
	AZM46MK-TS7.2	SGD663
	AZM46MK-TS7.2R	SGD663
	AZM46MK-TS7.2U	SGD663
	AZM46MK-TS7.2L	SGD663
	AZM46MK-TS10	SGD680
	AZM46MK-TS10R	SGD680
	AZM46MK-TS10U	SGD680
	AZM46MK-TS10L	SGD680
	AZM46MK-TS20	SGD680
	AZM46MK-TS20R	SGD680
	AZM46MK-TS20U	SGD680
	AZM46MK-TS20L	SGD680
	AZM46MK-TS30	SGD680
	AZM46MK-TS30R	SGD680
	AZM46MK-TS30U	SGD680
	AZM46MK-TS30L	SGD680
60 mm	**AZM66MK-TS3.6**	SGD799
	AZM66MK-TS3.6R	SGD799
	AZM66MK-TS3.6U	SGD799
	AZM66MK-TS3.6L	SGD799
	AZM66MK-TS7.2	SGD799
	AZM66MK-TS7.2R	SGD799
	AZM66MK-TS7.2U	SGD799
	AZM66MK-TS7.2L	SGD799
	AZM66MK-TS10	SGD816
	AZM66MK-TS10R	SGD816
	AZM66MK-TS10U	SGD816
	AZM66MK-TS10L	SGD816
	AZM66MK-TS20	SGD816
	AZM66MK-TS20R	SGD816
	AZM66MK-TS20U	SGD816
	AZM66MK-TS20L	SGD816
	AZM66MK-TS30	SGD816
	AZM66MK-TS30R	SGD816
	AZM66MK-TS30U	SGD816
	AZM66MK-TS30L	SGD816

◇**FC** Geared Type

Frame Size	Product Name	List Price
42 mm	**AZM46AK-FC7.2UA**	SGD646
	AZM46AK-FC7.2DA	SGD646
	AZM46AK-FC10UA	SGD646
	AZM46AK-FC10DA	SGD646
	AZM46AK-FC20UA	SGD646
	AZM46AK-FC20DA	SGD646
	AZM46AK-FC30UA	SGD646
	AZM46AK-FC30DA	SGD646
60 mm	**AZM66AK-FC7.2UA**	SGD769
	AZM66AK-FC7.2DA	SGD769
	AZM66AK-FC10UA	SGD769
	AZM66AK-FC10DA	SGD769
	AZM66AK-FC20UA	SGD769
	AZM66AK-FC20DA	SGD769
	AZM66AK-FC30UA	SGD769
	AZM66AK-FC30DA	SGD769

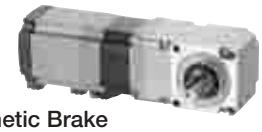

◇**FC** Geared Type with Electromagnetic Brake

Frame Size	Product Name	List Price
42 mm	**AZM46MK-FC7.2UA**	SGD821
	AZM46MK-FC7.2DA	SGD821
	AZM46MK-FC10UA	SGD821
	AZM46MK-FC10DA	SGD821
	AZM46MK-FC20UA	SGD821
	AZM46MK-FC20DA	SGD821
	AZM46MK-FC30UA	SGD821
	AZM46MK-FC30DA	SGD821
60 mm	**AZM66MK-FC7.2UA**	SGD994
	AZM66MK-FC7.2DA	SGD994
	AZM66MK-FC10UA	SGD994
	AZM66MK-FC10DA	SGD994
	AZM66MK-FC20UA	SGD994
	AZM66MK-FC20DA	SGD994
	AZM66MK-FC30UA	SGD994
	AZM66MK-FC30DA	SGD994

◇**PS** Geared Type

Frame Size	Product Name	List Price
28 mm	**AZM24AK-PS7.2** NEW	SGD625
	AZM24AK-PS10 NEW	SGD625
42 mm	**AZM46AK-PS5**	SGD628
	AZM46AK-PS7.2	SGD628
	AZM46AK-PS10	SGD628
	AZM46AK-PS25	SGD690
	AZM46AK-PS36	SGD690
	AZM46AK-PS50	SGD690
60 mm	**AZM66AK-PS5**	SGD750
	AZM66AK-PS7.2	SGD750
	AZM66AK-PS10	SGD750
	AZM66AK-PS25	SGD838
	AZM66AK-PS36	SGD838
	AZM66AK-PS50	SGD838

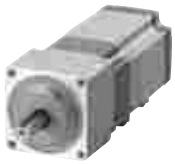

◇**PS** Geared Type with Electromagnetic Brake

Frame Size	Product Name	List Price
42 mm	**AZM46MK-PS5**	SGD803
	AZM46MK-PS7.2	SGD803
	AZM46MK-PS10	SGD803
	AZM46MK-PS25	SGD865
	AZM46MK-PS36	SGD865
	AZM46MK-PS50	SGD865
60 mm	**AZM66MK-PS5**	SGD975
	AZM66MK-PS7.2	SGD975
	AZM66MK-PS10	SGD975
	AZM66MK-PS25	SGD1,063
	AZM66MK-PS36	SGD1,063
	AZM66MK-PS50	SGD1,063

◇**HPG** Geared Type

Frame Size	Product Name	List Price
40 mm	**AZM46AK-HP5**	SGD740
	AZM46AK-HP5F	SGD728
	AZM46AK-HP9	SGD740
	AZM46AK-HP9F	SGD728
60 mm	**AZM66AK-HP5**	SGD1,000
	AZM66AK-HP5F	SGD981
	AZM66AK-HP15	SGD1,184
	AZM66AK-HP15F	SGD1,165

◇**HPG** Geared Type with Electromagnetic Brake

Frame Size	Product Name	List Price
40 mm	**AZM46MK-HP5**	SGD915
	AZM46MK-HP5F	SGD903
	AZM46MK-HP9	SGD915
	AZM46MK-HP9F	SGD903
60 mm	**AZM66MK-HP5**	SGD1,225
	AZM66MK-HP5F	SGD1,206
	AZM66MK-HP15	SGD1,409
	AZM66MK-HP15F	SGD1,390

◇Harmonic Geared Type

Frame Size	Product Name	List Price
30 mm	**AZM24AK-HS50** NEW	SGD954
	AZM24AK-HS100 NEW	SGD954
42 mm	**AZM46AK-HS50**	SGD996
	AZM46AK-HS100	SGD996
60 mm	**AZM66AK-HS50**	SGD1,344
	AZM66AK-HS100	SGD1,344

◇Harmonic Geared Type with Electromagnetic Brake

Frame Size	Product Name	List Price
42 mm	**AZM46MK-HS50**	SGD1,171
	AZM46MK-HS100	SGD1,171
60 mm	**AZM66MK-HS50**	SGD1,569
	AZM66MK-HS100	SGD1,569

Drivers

◇Built-in Controller Type

Power Supply Input	Product Name	List Price
24/48 VDC	**AZD-KD**	SGD488

◇Pulse Input Type

Power Supply Input	Product Name	List Price
24/48 VDC	**AZD-K**	SGD425

◇Pulse Input Type with RS-485 Communication NEW

Power Supply Input	Product Name	List Price
24/48 VDC	**AZD-KX**	SGD488

Connection Cable Sets/Flexible Connection Cable Sets

Use a flexible connection cable set if the cable will be bent repeatedly. We provide connection cables and flexible extension cables that can be connected to connection cables for extension. See page 06-119.

The motor cable and electromagnetic brake cable from the motor cannot be directly connected to a driver. To connect the motor to the driver, use a connection cable.

[For **AZM14**, **AZM15**, **AZM24**, **AZM26**]

◇For the product with no Electromagnetic Brakes

Type	Length L (m)	Product Name	List Price
Connection Cable Set	0.5	**CC005VZ2F2**	SGD38
	1	**CC010VZ2F2**	SGD38
	1.5	**CC015VZ2F2**	SGD44
	2	**CC020VZ2F2**	SGD50
	2.5	**CC025VZ2F2**	SGD56
	3	**CC030VZ2F2**	SGD63
	4	**CC040VZ2F2**	SGD98
	5	**CC050VZ2F2**	SGD110
	7	**CC070VZ2F2**	SGD136
	10	**CC100VZ2F2**	SGD176
	15	**CC150VZ2F2**	SGD244
	20	**CC200VZ2F2**	SGD310

Type	Length L (m)	Product Name	List Price
Flexible Connection Cable Set	0.5	**CC005VZ2R2**	SGD84
	1	**CC010VZ2R2**	SGD84
	1.5	**CC015VZ2R2**	SGD92
	2	**CC020VZ2R2**	SGD99
	2.5	**CC025VZ2R2**	SGD106
	3	**CC030VZ2R2**	SGD111
	4	**CC040VZ2R2**	SGD126
	5	**CC050VZ2R2**	SGD141
	7	**CC070VZ2R2**	SGD180
	10	**CC100VZ2R2**	SGD236
	15	**CC150VZ2R2**	SGD333
	20	**CC200VZ2R2**	SGD426

[For **AZM46**, **AZM48**, **AZM66**, **AZM69**]

For Motor For Encoder

For Motor For Encoder For Electromagnetic Brake

◇For the product with no Electromagnetic Brakes

Type	Length L (m)	Product Name	List Price
Connection Cable Set	0.5	**CC005VZF2**	SGD38
	1	**CC010VZF2**	SGD38
	1.5	**CC015VZF2**	SGD44
	2	**CC020VZF2**	SGD50
	2.5	**CC025VZF2**	SGD56
	3	**CC030VZF2**	SGD63
	4	**CC040VZF2**	SGD98
	5	**CC050VZF2**	SGD110
	7	**CC070VZF2**	SGD136
	10	**CC100VZF2**	SGD176
	15	**CC150VZF2**	SGD244
	20	**CC200VZF2**	SGD310
Flexible Connection Cable Set	0.5	**CC005VZR2**	SGD84
	1	**CC010VZR2**	SGD84
	1.5	**CC015VZR2**	SGD92
	2	**CC020VZR2**	SGD99
	2.5	**CC025VZR2**	SGD106
	3	**CC030VZR2**	SGD111
	4	**CC040VZR2**	SGD126
	5	**CC050VZR2**	SGD141
	7	**CC070VZR2**	SGD180
	10	**CC100VZR2**	SGD236
	15	**CC150VZR2**	SGD333
	20	**CC200VZR2**	SGD426

◇For the product with Electromagnetic Brakes

Type	Length L (m)	Product Name	List Price
Connection Cable Set	0.5	**CC005VZFB2**	SGD53
	1	**CC010VZFB2**	SGD53
	1.5	**CC015VZFB2**	SGD60
	2	**CC020VZFB2**	SGD68
	2.5	**CC025VZFB2**	SGD75
	3	**CC030VZFB2**	SGD83
	4	**CC040VZFB2**	SGD121
	5	**CC050VZFB2**	SGD135
	7	**CC070VZFB2**	SGD166
	10	**CC100VZFB2**	SGD214
	15	**CC150VZFB2**	SGD294
	20	**CC200VZFB2**	SGD373
Flexible Connection Cable Set	0.5	**CC005VZRB2**	SGD114
	1	**CC010VZRB2**	SGD114
	1.5	**CC015VZRB2**	SGD124
	2	**CC020VZRB2**	SGD134
	2.5	**CC025VZRB2**	SGD143
	3	**CC030VZRB2**	SGD151
	4	**CC040VZRB2**	SGD171
	5	**CC050VZRB2**	SGD191
	7	**CC070VZRB2**	SGD240
	10	**CC100VZRB2**	SGD311
	15	**CC150VZRB2**	SGD433
	20	**CC200VZRB2**	SGD551

Accessories

Motors

Type \ Accessories		Parallel Key	Motor Installation Screws	Operating Manual
Standard Type		—	—	1 set
TS Geared Type	Frame Size 42 mm	—	—	
	Frame Size 60 mm	1 piece	M4×60 P0.7 (4 pieces)	
FC Geared Type		1 piece	—	
PS Geared Type	Frame Size 28 mm	—	—	
	Frame Size 42 mm, 60 mm	1 piece	—	
HPG Geared Type	Shaft Output	1 piece	—	
	Flange Output	—	—	
Harmonic Geared Type	Frame Size 30 mm	—	—	
	Frame Size 42 mm, 60 mm	1 piece	—	

For the details of the functions and operation methods of the product, refer to the Operating Manual (Functions). The Operating Manual for Functions does not come with the product. Contact the nearest Oriental Motor sales office, or download the Operating Manual from the Oriental Motor website.

Drivers

Type \ Accessories	Connector	Operating Manual
For All Types	・Connector for CN4 (1 piece) ・Connector for CN1 (1 piece)	1 set

Connection Cable Sets/Flexible Connection Cable Sets

Type \ Accessories	Operating Manual
Connection Cable Sets	—
Flexible Connection Cable Sets	1 set

Standard Type Frame Size 20 mm, 28 mm

Specifications

Motor Product Name	Single Shaft	AZM14AK	AZM15AK	AZM24AK	AZM26AK
Driver Product Name	Built-in Controller	AZD-KD			
	Pulse Input with RS-485 Communication	AZD-KX			
	Pulse Input	AZD-K			
Maximum Holding Torque	N·m	0.02	0.036	0.095	0.19
Holding Torque at Motor Standstill	N·m	0.01	0.018	0.047	0.095
Rotor Inertial	J: kg·m^2	2.7×10^{-7}	3.9×10^{-7}	9.2×10^{-7}	17×10^{-7}
Resolution	Resolution Setting: 1000 P/R	0.36°/Pulse			
Power Supply Input	Voltage	24 VDC ±5%			
	Input Current A	0.5	0.6	1.6	1.6

Speed – Torque Characteristics (Reference values)

AZM14

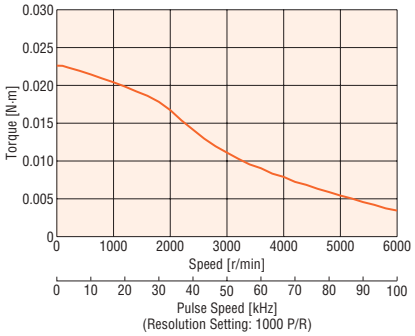

AZM15

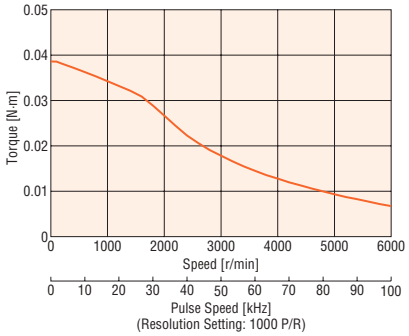

AZM24

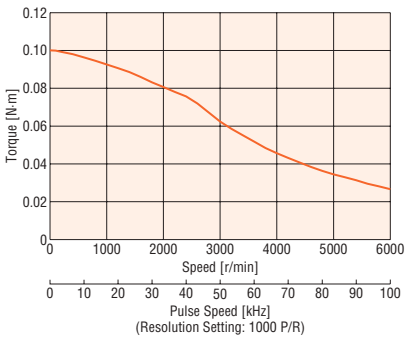

AZM26

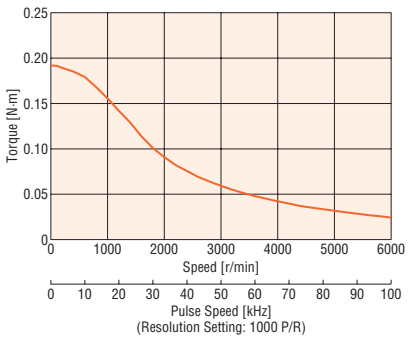

Note

- The speed–torque characteristics shows the data based on the company's measurement conditions. If conditions change, the characteristics may change.
- Depending on the driving conditions, a considerable amount of heat may be generated by the motor. To protect the ABZO sensor, ensure that the motor case temperature is 80°C or less.

Descriptions of the Terms on the Specification Table

Maximum Holding Torque	: The maximum holding torque (holding force) of the motor when power (rated current) is being supplied but the motor shaft is at standstill. (With geared types, the permissible strength of the gear is given consideration for this value.)	
Permissible Torque	: The maximum value of the torque that can be continuously applied on the output gear shaft.	
Maximum Instantaneous Torque	: This is the maximum torque value that can be applied to the output gear shaft during acceleration/deceleration like when an inertial load is started and stopped.	
Holding Torque at Motor Standstill	Power ON	: Holding torque when the automatic current cutback function is active.
	Electromagnetic Brake	: Static friction torque when the electromagnetic brake is activated at standstill. (Electromagnetic brake is power off activated type.)

Standard Type Frame Size 42 mm, 60 mm

Lineup Added

Specifications

Motor Product Name	Single Shaft	AZM46A□K	AZM48A□K	AZM66A□K	AZM69A□K
	With Electromagnetic Brake	AZM46M□K	—	AZM66M□K	AZM69M□K
Driver Product Name	Built-in Controller	AZD-KD			
	Pulse Input with RS-485 Communication	AZD-KX			
	Pulse Input	AZD-K			
Maximum Holding Torque	N·m	0.3	0.72	1	2
Holding Torque at Motor Standstill	Power ON N·m	0.15	0.36	0.5	1
	Electromagnetic Brake N·m	0.15	—	0.5	1
Rotor Inertial	J: kg·m^2	55×10^{-7} (71×10^{-7})*1	115×10^{-7}	370×10^{-7} (530×10^{-7})*1	740×10^{-7} (900×10^{-7})*1
Resolution	Resolution Setting: 1000 P/R	0.36°/Pulse			
Power Supply Input	Voltage	24 VDC ±5%*2 /48 VDC ±5%*3	24 VDC ±5% /48 VDC ±5%*3	24 VDC ±5%*2 /48 VDC ±5%*3	
	Input Current A	1.72 (1.8)*1	2.2	3.55 (3.8)*1	3.45 (3.7)*1

● Either **0** (Straight) or **1** (With a key) indicating the configuration is entered where the box □ is located within the product name. (For **AZM46**, straight only)
For single-sided milling, no character is entered into the □ mark.

*1 The values in the ( ) are those measured when a motor with electromagnetic brake is connected.

*2 For the electromagnetic brake type, the 24 VDC±4% specification applies if the wiring distance between the motor and driver is extended by 20 m using a cable.

*3 When the motor is operated from 48 VDC input, use an inertial load 10 times of the rotor inertial ratio or less and twice the safety factor or more when calculating the acceleration torque. (Excluding **AZM46**)

*4 Motor only

Speed – Torque Characteristics (Reference values)

AZM46

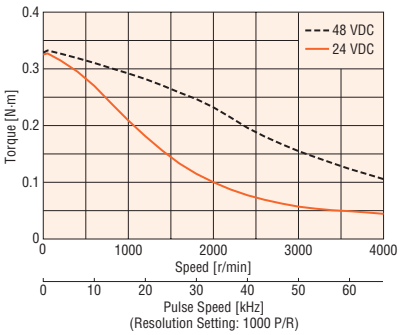

AZM48

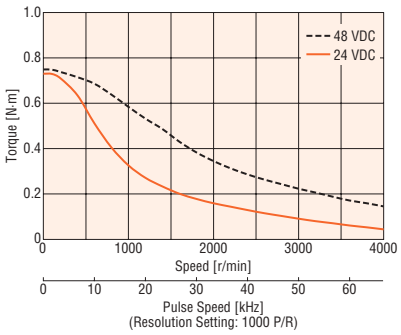

AZM66

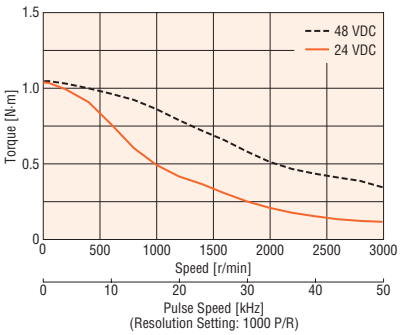

AZM69

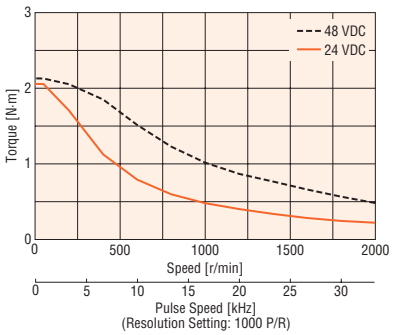

Note

● The speed–torque characteristics shows the data based on the company's measurement conditions. If conditions change, the characteristics may change.

● Depending on the driving conditions, a considerable amount of heat may be generated by the motor. To protect the ABZO sensor, ensure that the motor case temperature is 80°C or less.
(When conforming to the UL/CSA Standards, it is required to keep the temperature of the motor case at 75°C or less, since the motor is recognized as insulation class A.)

TS Geared Type Frame Size 42 mm

Specifications

Motor Product Name	Single Shaft	AZM46AK-TS3.6□	AZM46AK-TS7.2□	AZM46AK-TS10□	AZM46AK-TS20□	AZM46AK-TS30□
	With Electromagnetic Brake	AZM46MK-TS3.6□	AZM46MK-TS7.2□	AZM46MK-TS10□	AZM46MK-TS20□	AZM46MK-TS30□
Driver Product Name	Built-in Controller	AZD-KD				
	Pulse Input with RS-485 Communication	AZD-KX				
	Pulse Input	AZD-K				
Maximum Holding Torque	N·m	0.65	1.2	1.7	2	2.3
Rotor Inertial	J: kg·m^2	55×10^{-7} (71×10^{-7})*1				
Gear Ratio		3.6	7.2	10	20	30
Resolution	Resolution Setting: 1000 P/R	0.1°/Pulse	0.05°/Pulse	0.036°/Pulse	0.018°/Pulse	0.012°/Pulse
Permissible Torque	N·m	0.65	1.2	1.7	2	2.3
Maximum Instantaneous Torque*	N·m	0.85	1.6	2	*	3
Holding Torque at Motor Standstill	Power ON N·m	0.54	1	1.5	1.8	2.3
	Electromagnetic Brake N·m	0.54	1	1.5	1.8	2.3
Speed Range	r/min	0~833	0~416	0~300	0~150	0~100
Backlash	arcmin	45 (0.75°)	25 (0.42°)		15 (0.25°)	
Power Supply Input	Voltage	24 VDC ±5%*2/48 VDC ±5%				
	Input Current A	1.72 (1.8)*1				

● The □ mark in the product name is replaced by **R** (Right), **U** (Upward), or **L** (Left) which shows the cable drawing direction. For the downward direction, no character is entered into the □ mark.

* For the geared motor output torque, refer to the Speed – Torque Characteristics.

*1 The values in the ( ) are those measured when a motor with electromagnetic brake is connected.

*2 For the electromagnetic brake type, the 24 VDC±4% specification applies if the wiring distance between the motor and driver is extended by 20 m using a cable.

*3 Motor only

Speed – Torque Characteristics (Reference values)

AZM46 Gear Ratio **3.6**

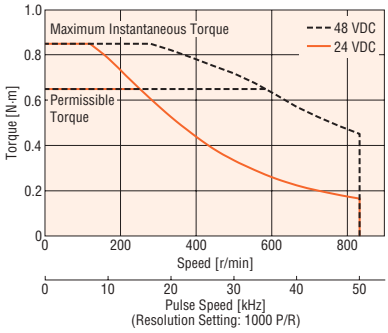

AZM46 Gear Ratio **7.2**

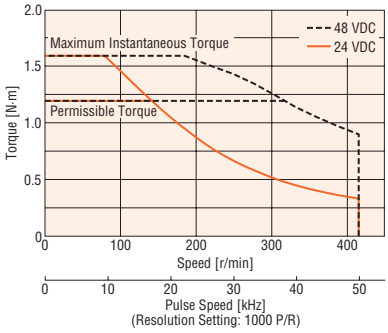

AZM46 Gear Ratio **10**

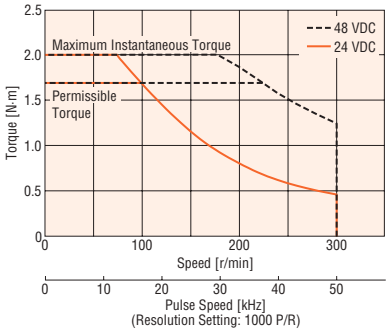

AZM46 Gear Ratio **20**

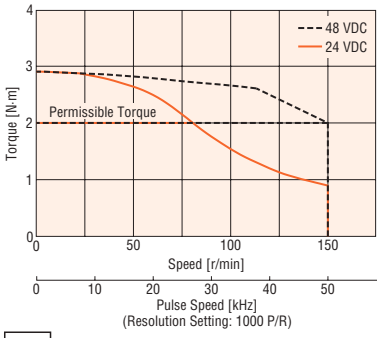

AZM46 Gear Ratio **30**

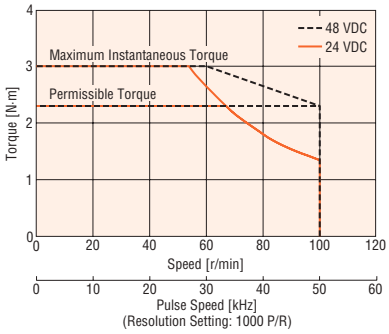

Note

● The speed–torque characteristics shows the data based on the company's measurement conditions. If conditions change, the characteristics may change.

● Depending on the driving conditions, a considerable amount of heat may be generated by the motor. To protect the ABZO sensor, ensure that the motor case temperature is 80°C or less. (When conforming to the UL/CSA Standards, it is required to keep the temperature of the motor case at 75°C or less, since the motor is recognized as insulation class A.)

TS Geared Type Frame Size 60 mm

Specifications

Motor Product Name	Single Shaft	AZM66AK-TS3.6□	AZM66AK-TS7.2□	AZM66AK-TS10□	AZM66AK-TS20□	AZM66AK-TS30□
	With Electromagnetic Brake	AZM66MK-TS3.6□	AZM66MK-TS7.2□	AZM66MK-TS10□	AZM66MK-TS20□	AZM66MK-TS30□
Driver Product Name	Built-in Controller	AZD-KD				
	Pulse Input with RS-485 Communication	AZD-KX				
	Pulse Input	AZD-K				
Maximum Holding Torque	N·m	1.8	3	4	5	6
Rotor Inertial	J: kg·m^2	370×10^{-7} (530×10^{-7})*1				
Gear Ratio		3.6	7.2	10	20	30
Resolution	Resolution Setting: 1000 P/R	0.1°/Pulse	0.05°/Pulse	0.036°/Pulse	0.018°/Pulse	0.012°/Pulse
Permissible Torque	N·m	1.8	3	4	5	6
Maximum Instantaneous Torque*	N·m	*	*	*	8	10
Holding Torque at Motor Standstill	Power ON N·m	1.1	2.2	3	5	6
	Electromagnetic Brake N·m	1.1	2.2	3	5	6
Speed Range	r/min	0~833	0~416	0~300	0~150	0~100
Backlash	arcmin	35 (0.59°)	15 (0.25°)		10 (0.17°)	
Power Supply Input	Voltage	24 VDC ±5%*2/48 VDC ±5%*3				
	Input Current A	3.55 (3.8)*1				

● The □ mark in the product name is replaced by **R** (Right), **U** (Upward), or **L** (Left) which shows the cable drawing direction. For the downward direction, no character is entered into the □ mark.

* For the geared motor output torque, refer to the Speed – Torque Characteristics.

*1 The values in the ( ) are those measured when a motor with electromagnetic brake is connected.

*2 For the electromagnetic brake type, the 24 VDC±4% specification applies if the wiring distance between the motor and driver is extended by 20 m using a cable.

*3 When the motor is operated from 48 VDC input, use an inertial load 10 times the rotor inertial ratio or less and twice the safety factor or more when calculating the acceleration torque.

*4 Motor only

Speed – Torque Characteristics (Reference values)

AZM66 Gear Ratio **3.6**

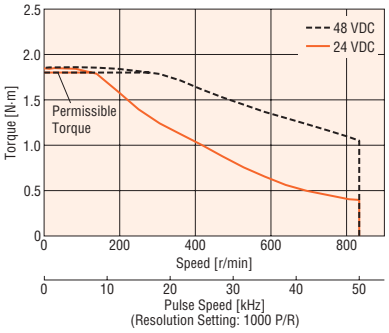

AZM66 Gear Ratio **7.2**

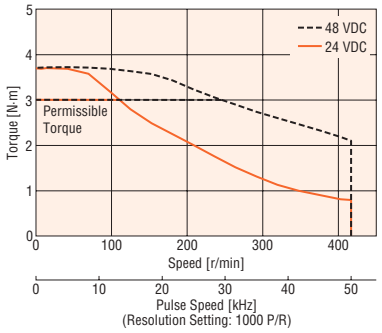

AZM66 Gear Ratio **10**

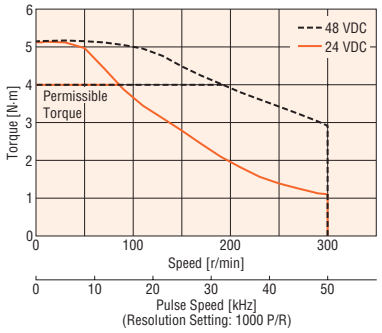

AZM66 Gear Ratio **20**

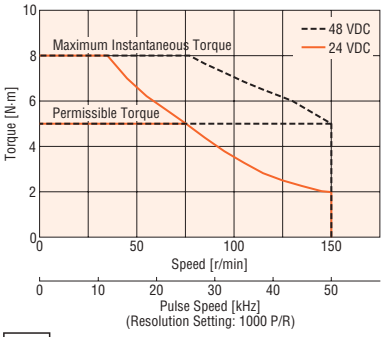

AZM66 Gear Ratio **30**

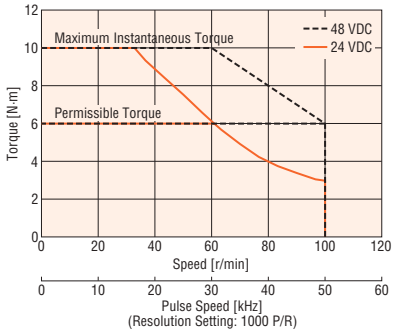

Note

● The speed–torque characteristics shows the data based on the company's measurement conditions. If conditions change, the characteristics may change.

● Depending on the driving conditions, a considerable amount of heat may be generated by the motor. To protect the ABZO sensor, ensure that the motor case temperature is 80°C or less. (When conforming to the UL/CSA Standards, it is required to keep the temperature of the motor case at 75°C or less, since the motor is recognized as insulation class A.)

FC Geared Type Frame Size 42 mm

Specifications

Motor Product Name	Single Shaft	AZM46AK-FC7.2□A	AZM46AK-FC10□A	AZM46AK-FC20□A	AZM46AK-FC30□A
	With Electromagnetic Brake	AZM46MK-FC7.2□A	AZM46MK-FC10□A	AZM46MK-FC20□A	AZM46MK-FC30□A
Driver Product Name	Built-in Controller	AZD-KD			
	Pulse Input with RS-485 Communication	AZD-KX			
	Pulse Input	AZD-K			
Maximum Holding Torque	N·m	0.7	1	2	3
Rotor Inertial	J: kg·m^2	55×10^{-7} (71×10^{-7})*1			
Gear Ratio		7.2	10	20	30
Resolution	Resolution Setting: 1000 P/R	0.05°/Pulse	0.036°/Pulse	0.018°/Pulse	0.012°/Pulse
Permissible Torque	N·m	0.7	1	2	3
Holding Torque at Motor Standstill	Power ON N·m	0.7	1	2	3
	Electromagnetic Brake N·m	0.7	1	2	3
Speed Range	r/min	0～416	0～300	0～150	0～100
Backlash	arcmin	25 (0.42°)		15 (0.25°)	
Power Supply Input	Voltage	24 VDC ±5%*2/48 VDC ±5%			
	Input Current A	1.72 (1.8)*1			

● Either **U** (Upward) or **D** (Downward) indicating the cable drawing direction is entered where the box □ is located within the product name.

*1 The values in the ( ) are those measured when a motor with electromagnetic brake is connected.

*2 For the electromagnetic brake type, the 24 VDC±4% specification applies if the wiring distance between the motor and driver is extended by 20 m using a cable.

*3 Motor only

Speed – Torque Characteristics (Reference values)

AZM46 Gear Ratio **7.2**

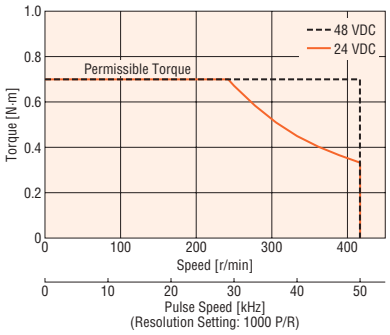

AZM46 Gear Ratio **10**

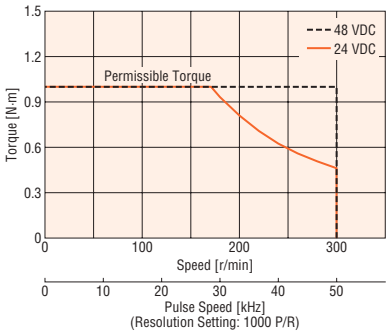

AZM46 Gear Ratio **20**

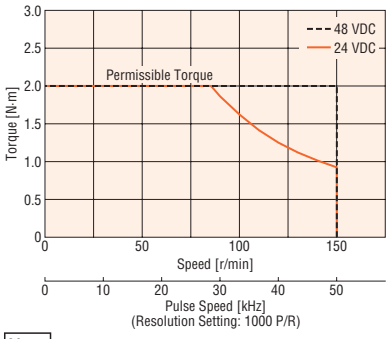

AZM46 Gear Ratio **30**

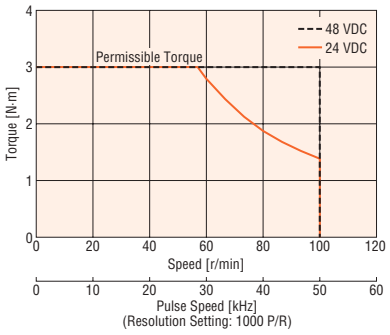

Note

● The speed–torque characteristics shows the data based on the company's measurement conditions. If conditions change, the characteristics may change.

● Depending on the driving conditions, a considerable amount of heat may be generated by the motor. To protect the ABZO sensor, ensure that the motor case temperature is 80°C or less.
(When conforming to the UL/CSA Standards, it is required to keep the temperature of the motor case at 75°C or less, since the motor is recognized as insulation class A.)

FC Geared Type Frame Size 60 mm

Specifications

Motor Product Name	Single Shaft	AZM66AK-FC7.2□A	AZM66AK-FC10□A	AZM66AK-FC20□A	AZM66AK-FC30□A
	With Electromagnetic Brake	AZM66MK-FC7.2□A	AZM66MK-FC10□A	AZM66MK-FC20□A	AZM66MK-FC30□A
Driver Product Name	Built-in Controller	AZD-KD			
	Pulse Input with RS-485 Communication	AZD-KX			
	Pulse Input	AZD-K			
Maximum Holding Torque	N·m	2.5	3.5	7	10.5
Rotor Inertial	J: kg·m^2	370×10^{-7} (530×10^{-7})*1			
Gear Ratio		7.2	10	20	30
Resolution	Resolution Setting: 1000 P/R	0.05°/Pulse	0.036°/Pulse	0.018°/Pulse	0.012°/Pulse
Permissible Torque	N·m	2.5	3.5	7	10.5
Holding Torque at Motor Standstill	Power ON N·m	2.5	3.5	7	10.5
	Electromagnetic Brake N·m	2.5	3.5	7	10.5
Speed Range	r/min	0～416	0～300	0～150	0～100
Backlash	arcmin	15 (0.25°)		10 (0.17°)	
Power Supply Input	Voltage	24 VDC ±5%*2/48 VDC ±5%*3			
	Input Current A	3.35 (3.8)*1			

● Either **U** (Upward) or **D** (Downward) indicating the cable drawing direction is entered where the box □ is located within the product name.

*1 The values in the ( ) are those measured when a motor with electromagnetic brake is connected.

*2 For the electromagnetic brake type, the 24 VDC±4% specification applies if the wiring distance between the motor and driver is extended by 20 m using a cable.

*3 When the motor is operated from 48 VDC input, use an inertial load 10 times the rotor inertial ratio or less and twice the safety factor or more when calculating the acceleration torque.

*4 Motor only

Speed – Torque Characteristics (Reference values)

AZM66 Gear Ratio **7.2**

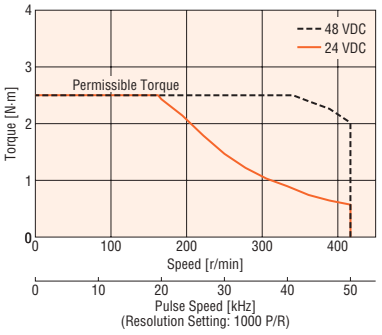

AZM66 Gear Ratio **10**

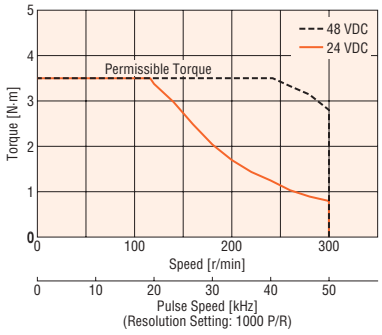

AZM66 Gear Ratio **20**

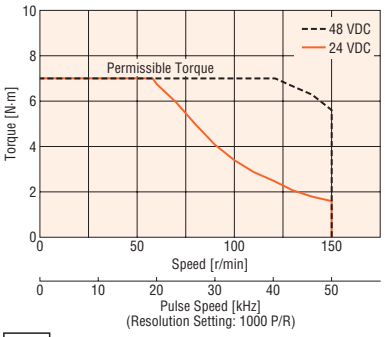

AZM66 Gear Ratio **30**

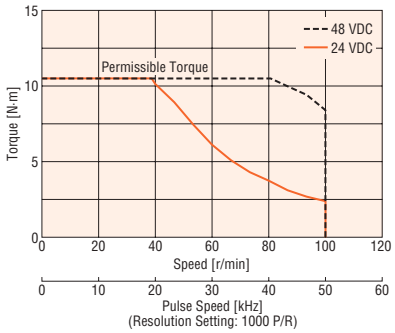

Note

● The speed–torque characteristics shows the data based on the company's measurement conditions. If conditions change, the characteristics may change.

● Depending on the driving conditions, a considerable amount of heat may be generated by the motor. To protect the ABZO sensor, ensure that the motor case temperature is 80°C or less. (When conforming to the UL/CSA Standards, it is required to keep the temperature of the motor case at 75°C or less, since the motor is recognized as insulation class A.)

PS Geared Type Frame Size 28 mm NEW

Specifications

Motor Product Name	Single Shaft	AZM24AK-PS7.2	AZM24AK-PS10
Driver Product Name	Built-in Controller	AZD-KD	
	Pulse Input with RS-485 Communication	AZD-KX	
	Pulse Input	AZD-K	
Maximum Holding Torque	N·m	0.3	0.5
Rotor Inertial	J: kg·m^2	9.2×10^{-7}	
Gear Ratio		7.2	10
Resolution	Resolution Setting: 1000 P/R	0.05°/Pulse	0.036°/Pulse
Permissible Torque	N·m	0.3	0.5
Maximum Instantaneous Torque*	N·m	*	—
Holding Torque at Motor Standstill	N·m	0.2	0.27
Speed Range	r/min	0～416	0～300
Backlash	arcmin	35 (0.59°)	
Power Supply Input	Voltage	24 VDC ±5%	
	Input Current A	1.6	

* For the geared motor output torque, refer to the Speed – Torque Characteristics.

Speed – Torque Characteristics (Reference values)

AZM24 Gear Ratio **7.2**

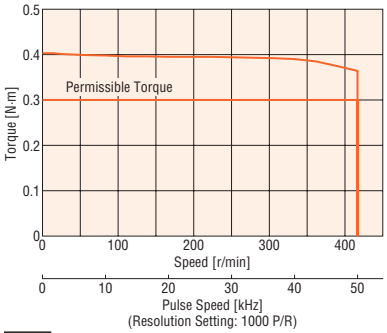

AZM24 Gear Ratio **10**

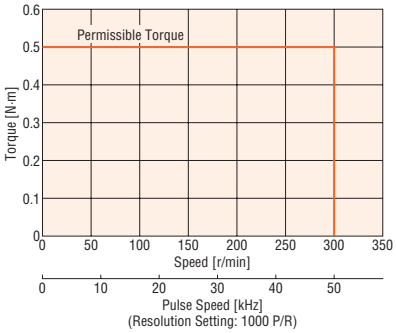

Note

- The speed–torque characteristics shows the data based on the company's measurement conditions. If conditions change, the characteristics may change.
- Depending on the driving conditions, a considerable amount of heat may be generated by the motor. To protect the ABZO sensor, ensure that the motor case temperature is 80°C or less.

PS Geared Type Frame Size 42 mm

Specifications

Motor Product Name	Single Shaft	AZM46AK-PS5	AZM46AK-PS7.2	AZM46AK-PS10	AZM46AK-PS25	AZM46AK-PS36	AZM46AK-PS50
	With Electromagnetic Brake	AZM46MK-PS5	AZM46MK-PS7.2	AZM46MK-PS10	AZM46MK-PS25	AZM46MK-PS36	AZM46MK-PS50
Driver Product Name	Built-in Controller	AZD-KD					
	Pulse Input with RS-485 Communication	AZD-KX					
	Pulse Input	AZD-K					
Maximum Holding Torque	N·m	1	1.5		2.5	3	
Rotor Inertial	J: kg·m^2	55×10^{-7} (71×10^{-7})*1					
Gear Ratio		5	7.2	10	25	36	50
Resolution	Resolution Setting: 1000 P/R	0.072°/Pulse	0.05°/Pulse	0.036°/Pulse	0.0144°/Pulse	0.01°/Pulse	0.0072°/Pulse
Permissible Torque	N·m	1	1.5		2.5	3	
Maximum Instantaneous Torque*	N·m	*	2		6	*	6
Holding Torque at Motor Standstill	Power ON N·m	0.75	1	1.5	2.5	3	
	Electromagnetic Brake N·m	0.75	1	1.5	2.5	3	
Speed Range	r/min	0~600	0~416	0~300	0~120	0~83	0~60
Backlash	arcmin	15 (0.25°)					
Power Supply Input	Voltage	24 VDC ±5%*2/48 VDC ±5%					
	Input Current A	1.72 (1.8)*1					

* For the geared motor output torque, refer to the Speed – Torque Characteristics.

*1 The values in the ( ) are those measured when a motor with electromagnetic brake is connected.

*2 For the electromagnetic brake type, the 24 VDC±4% specification applies if the wiring distance between the motor and driver is extended by 20 m using a cable.

*3 Motor only

Speed – Torque Characteristics (Reference values)

AZM46 Gear Ratio **5**

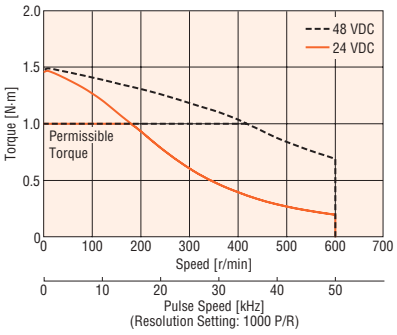

AZM46 Gear Ratio **7.2**

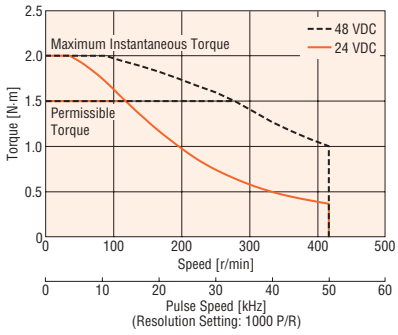

AZM46 Gear Ratio **10**

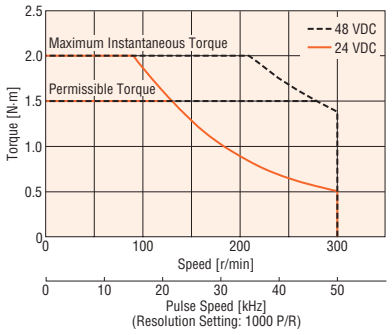

AZM46 Gear Ratio **25**

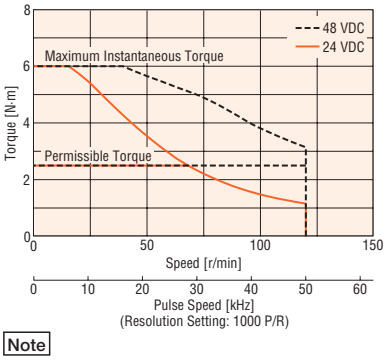

AZM46 Gear Ratio **36**

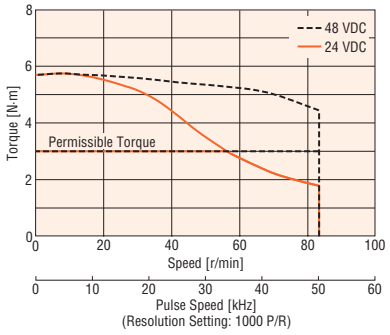

AZM46 Gear Ratio **50**

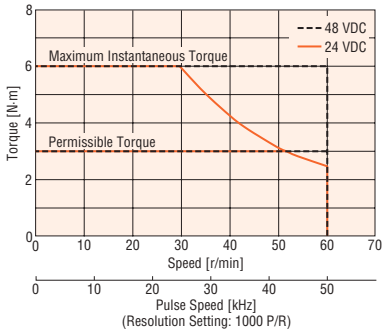

Note

- The speed–torque characteristics shows the data based on the company's measurement conditions. If conditions change, the characteristics may change.
- Depending on the driving conditions, a considerable amount of heat may be generated by the motor. To protect the ABZO sensor, ensure that the motor case temperature is 80°C or less. (When conforming to the UL/CSA Standards, it is required to keep the temperature of the motor case at 75°C or less, since the motor is recognized as insulation class A.)

PS Geared Type Frame Size 60 mm

Specifications

Motor Product Name	Single Shaft	AZM66AK-PS5	AZM66AK-PS7.2	AZM66AK-PS10	AZM66AK-PS25	AZM66AK-PS36	AZM66AK-PS50
	With Electromagnetic Brake	AZM66MK-PS5	AZM66MK-PS7.2	AZM66MK-PS10	AZM66MK-PS25	AZM66MK-PS36	AZM66MK-PS50
Driver Product Name	Built-in Controller	AZD-KD					
	Pulse Input with RS-485 Communication	AZD-KX					
	Pulse Input	AZD-K					
Maximum Holding Torque	N·m	3.5	4	5	8		
Rotor Inertial	J: kg·m^2	370×10^{-7} (530×10^{-7})*1					
Gear Ratio		5	7.2	10	25	36	50
Resolution	Resolution Setting: 1000 P/R	0.072°/Pulse	0.05°/Pulse	0.036°/Pulse	0.0144°/Pulse	0.01°/Pulse	0.0072°/Pulse
Permissible Torque	N·m	3.5	4	5	8		
Maximum Instantaneous Torque*	N·m	*	*	*	*	*	20
Holding Torque at Motor Standstill	Power ON N·m	2.5	3.6	5	7.6	8	
	Electromagnetic Brake N·m	2.5	3.6	5	7.6	8	
Speed Range	r/min	0~600	0~416	0~300	0~120	0~83	0~60
Backlash	arcmin	7 (0.12°)			9 (0.15°)		
Power Supply Input	Voltage	24 VDC ±5%*2/48 VDC ±5%*3					
	Input Current A	3.55 (3.8)*1					

* For the geared motor output torque, refer to the Speed – Torque Characteristics.

*1 The values in the ( ) are those measured when a motor with electromagnetic brake is connected.

*2 For the electromagnetic brake type, the 24 VDC±4% specification applies if the wiring distance between the motor and driver is extended by 20 m using a cable.

*3 When the motor is operated from 48 VDC input, use an inertial load 10 times the rotor inertial ratio or less and twice the safety factor or more when calculating the acceleration torque.

*4 Motor only

Speed – Torque Characteristics (Reference values)

AZM66 Gear Ratio **5**

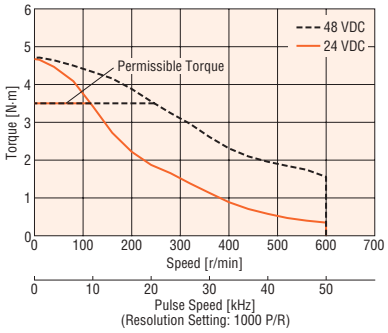

AZM66 Gear Ratio **7.2**

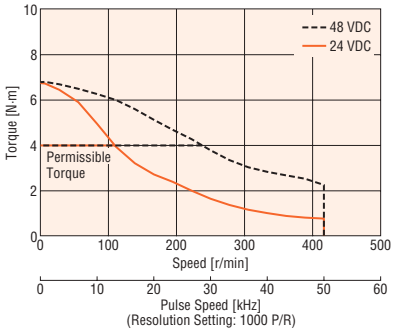

AZM66 Gear Ratio **10**

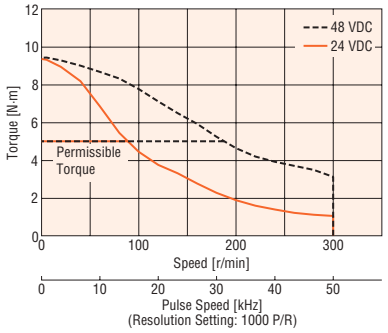

AZM66 Gear Ratio **25**

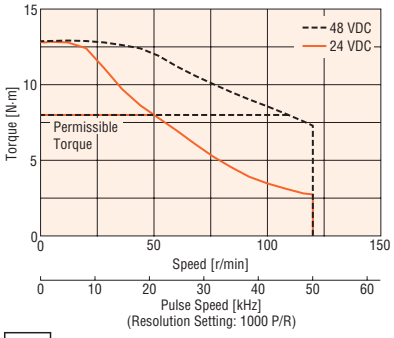

AZM66 Gear Ratio **36**

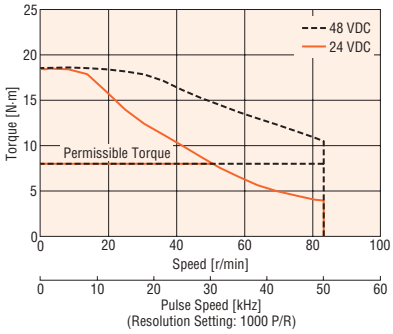

AZM66 Gear Ratio **50**

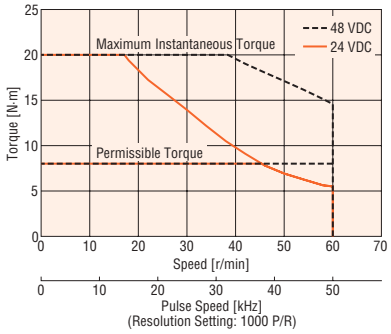

Note

- The speed–torque characteristics shows the data based on the company's measurement conditions. If conditions change, the characteristics may change.
- Depending on the driving conditions, a considerable amount of heat may be generated by the motor. To protect the ABZO sensor, ensure that the motor case temperature is 80°C or less. (When conforming to the UL/CSA Standards, it is required to keep the temperature of the motor case at 75°C or less, since the motor is recognized as insulation class A.)

HPG Geared Type Frame Size 40 mm, 60 mm

Specifications

Motor Product Name	Single Shaft	AZM46AK-HP5□	AZM46AK-HP9□	AZM66AK-HP5□	AZM66AK-HP15□
	With Electromagnetic Brake	AZM46MK-HP5□	AZM46MK-HP9□	AZM66MK-HP5□	AZM66MK-HP15□
Driver Product Name	Built-in Controller	AZD-KD			
	Pulse Input with RS-485 Communication	AZD-KX			
	Pulse Input	AZD-K			
Maximum Holding Torque	N·m	1.5	2.5	5	9
Rotor Inertial	J: kg·m^2	55×10^{-7} (71×10^{-7})*1		370×10^{-7} (530×10^{-7})*1	
Inertial*2	J: kg·m^2	5.8×10^{-7} (4.2×10^{-7})	3.4×10^{-7} (2.9×10^{-7})	92×10^{-7} (86×10^{-7})	78×10^{-7} (77×10^{-7})
Gear Ratio		5	9	5	15
Resolution	Resolution Setting: 1000 P/R	0.072°/Pulse	0.04°/Pulse	0.072°/Pulse	0.024°/Pulse
Permissible Torque*	N·m	*	2.5	*	9
Maximum Instantaneous Torque*	N·m	*	*	*	*
Holding Torque at Motor Standstill	Power ON N·m	0.75	1.35	2.5	7.5
	Electromagnetic Brake N·m	0.75	1.35	2.5	7.5
Speed Range	r/min	0~800	0~444	0~600	0~200
Backlash	arcmin	3 (0.05°)			
Power Supply Input	Voltage	24 VDC ±5%*4/48 VDC ±5%*5			
	Input Current A	1.72 (1.8)*1		3.55 (3.8)*1	
Runout of Output Flange Surface*3	mm	0.02			
Runout of Output Flange Inner Diameter*3	mm	0.03		0.04	

* For the geared motor output torque, refer to the Speed – Torque Characteristics.

● For the flange output type, **F** is entered where the box □ is located within the product name.

*1 The values in the ( ) are those measured when a motor with electromagnetic brake is connected.

*2 The values for the moments of inertia within the gear that has been converted to motor shaft values. The parentheses ( ) indicate the values for the flange output type.

*3 Specifications for the flange output type.

*4 For the electromagnetic brake type, the 24 VDC±4% specification applies if the wiring distance between the motor and driver is extended by 20 m using a cable.

*5 When the motor is operated from 48 VDC input, use an inertial load 10 times the rotor inertial ratio or less and twice the safety factor or more when calculating the acceleration torque. (Excluding **AZM46**)

*6 Motor only

Speed – Torque Characteristics (Reference values)

AZM46 Gear Ratio **5**

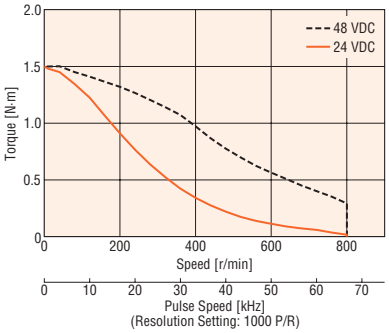

AZM46 Gear Ratio **9**

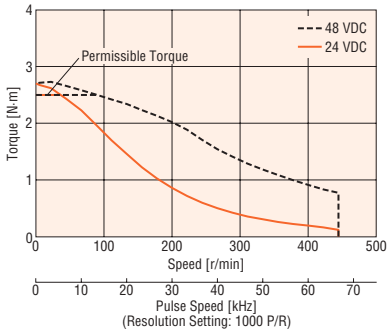

AZM66 Gear Ratio **5**

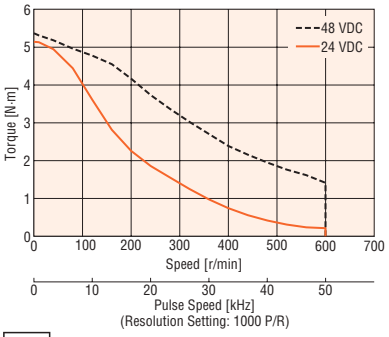

AZM66 Gear Ratio **15**

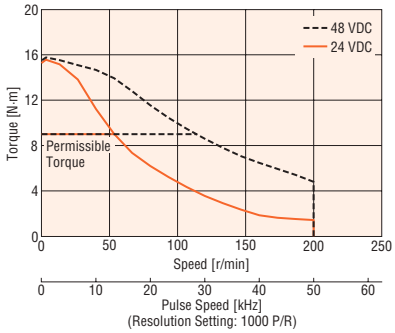

Note

● The speed–torque characteristics shows the data based on the company's measurement conditions. If conditions change, the characteristics may change.

● Depending on the driving conditions, a considerable amount of heat may be generated by the motor. To protect the ABZO sensor, ensure that the motor case temperature is 80°C or less. (When conforming to the UL/CSA Standards, it is required to keep the temperature of the motor case at 75°C or less, since the motor is recognized as insulation class A.)

Harmonic Geared Type Frame Size 30 mm, 42 mm, 60 mm

Lineup Added

Specifications

Motor Product Name	Single Shaft	AZM24AK-HS50	AZM24AK-HS100	AZM46AK-HS50	AZM46AK-HS100	AZM66AK-HS50	AZM66AK-HS100
	With Electromagnetic Brake	–	–	AZM46MK-HS50	AZM46MK-HS100	AZM66MK-HS50	AZM66MK-HS100
Driver Product Name	Built-in Controller	AZD-KD					
	Pulse Input with RS-485 Communication	AZD-KX					
	Pulse Input	AZD-K					
Maximum Holding Torque	N·m	1.8	2.4	3.5	5	7	10
Rotor Inertial	J: kg·m^2	12×10^{-7}		72×10^{-7} (88×10^{-7})*1		405×10^{-7} (565×10^{-7})*1	
Gear Ratio		50	100	50	100	50	100
Resolution	Resolution Setting: 1000 P/R	0.0072°/Pulse	0.0036°/Pulse	0.0072°/Pulse	0.0036°/Pulse	0.0072°/Pulse	0.0036°/Pulse
Permissible Torque	N·m	1.8	2.4	3.5	5	7	10
Maximum Instantaneous Torque*	N·m	3.3	4.8	8.3	11	*	36
Holding Torque at Motor Standstill	Power ON N·m	1.8	2.4	3.5	5	7	10
	Electromagnetic Brake N·m	–	–	3.5	5	7	10
Speed Range	r/min	0~70	0~35	0~70	0~35	0~60	0~30
Lost Motion (Load torque)	arcmin	1.5 or less (±0.09 N·m)	1.5 or less (±0.12 N·m)	1.5 or less (±0.16 N·m)	1.5 or less (±0.20 N·m)	0.7 or less (±0.28 N·m)	0.7 or less (±0.39 N·m)
Power Supply Input	Voltage	24 VDC ±5%		24 VDC ±5%*2/48 VDC ±5%*3			
	Input Current A	1.6		1.72 (1.8)*1		3.55 (3.8)*1	

* For the geared motor output torque, refer to the Speed – Torque Characteristics.

*1 The values in the ( ) are those measured when a motor with electromagnetic brake is connected.

*2 For the electromagnetic brake type, the 24 VDC±4% specification applies if the wiring distance between the motor and driver is extended by 20 m using a cable.

*3 When the motor is operated from 48 VDC input, use an inertial load 10 times of the rotor inertial ratio or less and twice the safety factor or more when calculating the acceleration torque. (Excluding **AZM46**).

*4 Motor only (Excluding frame size 30 mm)

Note

- The rotor inertia represents a sum of the inertia of the harmonic gear converted to motor shaft values.

Speed – Torque Characteristics (Reference values)

AZM24 Gear Ratio **50**

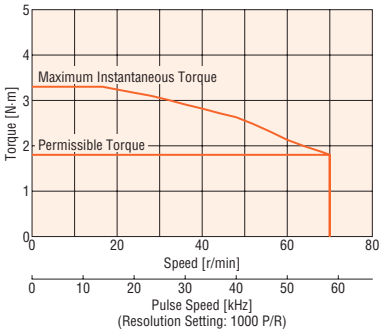

AZM46 Gear Ratio **50**

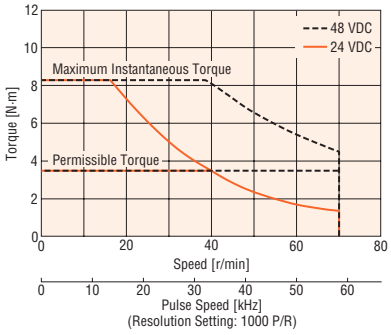

AZM66 Gear Ratio **50**

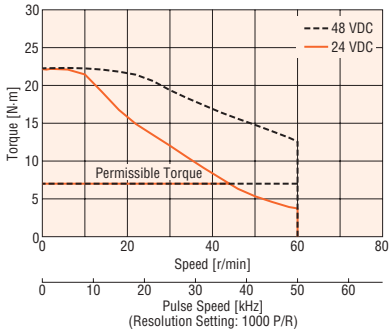

AZM24 Gear Ratio **100**

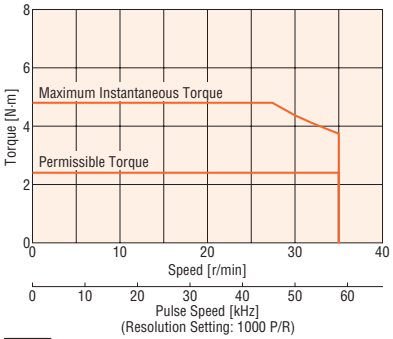

AZM46 Gear Ratio **100**

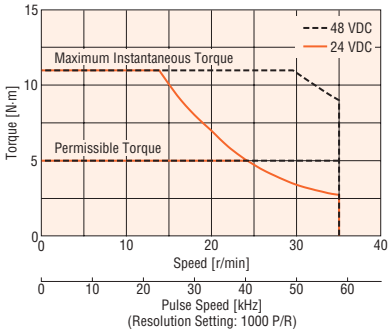

AZM66 Gear Ratio **100**

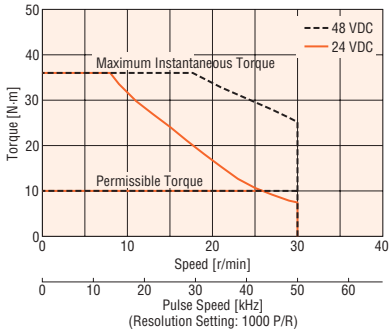

Note

- The speed–torque characteristics shows the data based on the company's measurement conditions. If conditions change, the characteristics may change.
- Depending on the driving conditions, a considerable amount of heat may be generated by the motor. To protect the ABZO sensor, ensure that the motor case temperature is 80°C or less. (When conforming to the UL/CSA Standards, it is required to keep the temperature of the motor case at 75°C or less, since the motor is recognized as insulation class A.)

Driver Specifications

Driver Type				Built-in Controller Type	Pulse Input Type with RS-485 Communication	Pulse Input Type
Driver Product Name				**AZD-KD**	**AZD-KX**	**AZD-K**
I/O Function	Max. Input Pulse Frequency			–	Line driver output by programmable controller: 1 MHz (When the pulse duty is 50%) Open-collector output by programmable controller: 250 kHz (When the pulse duty is 50%) Negative logic pulse input	
	Number of Positioning Data Sets			256 points	256 points*1	
	Direct Input			10 points	6 points	
	Direct Output			6 points		
	RS-485 Communication Remote Input			16 points		–
	RS-485 Communication Remote Output			16 points		–
Setting Tool	Support Software **MEXE02**			○		
Coordinate Management Method				Battery-free absolute system		
Operation	Positioning Operation	Type	Positioning Operation	○	○	○*1
			Push-motion Positioning Operation*2	○	○	○*1
		Connecting Method	Independent Operation	○	○	○*1
			Forward Feed Operation	○	○	○*1
			Multistep Speed-change (Shape connection)	○	○	○*1
		Sequence Control	Loop Operation (Repetition)	○	○	○*1
			Event Jump Operation	○	○	○*1
	Linked Operation	Position Control		○	○	○*1
		Speed Control		○	○	○*1
		Torque Control		○	○	○*1
		Push-motion*2		○	○	○*1
	Return-to-home Operation		Return-to-home Operation	○	○	○
			High-speed Return-to-home Operation	○	○	○
	JOG Operation			○	○	○
Monitor/Information			Waveform Monitoring	○	○	○
			Overload Detection	○	○	○
			Overheat Detection (Motor and driver)	○	○	○
			Position and Speed Information	○	○	○
			Temperature Detection (Motor and driver)	○	○	○
			Motor Load Factor	○	○	○
			Mileage/Accumulated Mileage	○	○	○
Alarm				○	○	○

*1 Available after setting with the support software **MEXE02**.
*2 Push-motion operation is not available to geared motors and **DG** Ⅱ Series motorized actuators.

RS-485 Communication Specifications

Protocol	Modbus RTU Mode
Electrical Characteristics	EIA-485 based, Straight cable Use twisted-pair cables (TIA/EIA-568B CAT5e or better recommended). The maximum total extension length is 50 m.*
Communication Mode	Half duplex and start-stop synchronization (Data: 8 bits, Stop bit: 1 bit or 2 bits, Parity: none, even, or odd)
Baud Rate	Select from 9600bps/19200bps/38400bps/57600bps/115200bps/230400bps.
Connection Type	Up to 31 units can be connected to a single programmable controller (Master unit).

*If noise generated by the motor cable or power supply cable causes a problem with the specific wiring or layout, shield the cable or use ferrite cores.

Electromagnetic Brake Specifications

Product Name		AZM46	AZM66	AZM69
Type		Power off activated type		
Power Supply Voltage		24 VDC ±5%*		
Power Supply Current	A	0.08	0.25	0.25
Brake Activate Time	ms	20		
Brake Release Time	ms	30		
Time Rating		Continuous		

*For the electromagnetic brake type, the 24 VDC±4% specification applies if the wiring distance between the motor and driver is extended by 20 m using a cable.
The product names are described with text by which the product name can be identified.

General Specifications

		Motor	Driver
Heat-resistant Class		130 (B) [Recognized as 105 (A) by UL.]	–
Insulation Resistance		The measured value is 100 MΩ or more when a 500 VDC megger is applied between the following locations: ・Case – Motor windings ・Case – Electromagnetic brake windings*1	The measured value is 100 MΩ or more when a 500 VDC megger is applied between the following locations: ・Protective earth terminal – Power supply terminal
Dielectric Strength Voltage		No abnormality is found with the following application for 1 minute: **AZM14**, **AZM15**, **AZM24**, **AZM26** ・Case – Motor windings 0.5 kVAC 50 Hz or 60 Hz **AZM46**, **AZM48**, **AZM66**, **AZM69** ・Case – Motor windings 1.0 kVAC 50 Hz or 60 Hz ・Case – Electromagnetic brake windings*1 1.0 kVAC 50 Hz or 60 Hz	–
Operating Environment (In operation)	Ambient Temperature	0～+40°C (Non-freezing)	0～+50°C (Non-freezing)
	Ambient Humidity	85% or less (Non-condensing)	
	Atmosphere	Use in an area without corrosive gases and dust. The product should not be exposed to water, oil or other liquids.	
Degree of Protection		**AZM14**, **AZM15**, **AZM24**, **AZM26**: IP40 (excluding installation surfaces and connector locations) **AZM46**, **AZM48**, **AZM66**, **AZM69**: IP66 (excluding installation surfaces and connector locations)	IP10
Stop Position Accuracy		**AZM14**, **AZM15**, **AZM24**, **AZM26**: ±5 min (±0.083°) **AZM46**, **AZM48**: ±4 min (±0.067°) **AZM66**, **AZM69**: ±3 min (±0.05°)	
Shaft Runout		0.05 T.I.R. (mm)*2	–
Concentricity of Installation Pilot to the Shaft		0.075 T.I.R. (mm)*2	–
Perpendicularity of Installation Surface to the Shaft		0.075 T.I.R. (mm)*2	–
Range of Multiple Rotation Inspection at Power OFF		**AZM14**, **AZM15**, **AZM24**, **AZM26**: ±450 rotations (900 rotations) **AZM46**, **AZM48**, **AZM66**, **AZM69**: ±900 rotations (1800 rotations)	

*1 Electromagnetic brake type only

*2 T.I.R. (Total Indicator Reading): The total dial gauge reading when the measurement section is rotated one revolution, centered on the reference axis center.

Note

● When measuring insulation resistance or performing a dielectric strength voltage test, be sure to disconnect the motor from the driver beforehand. Also, do not conduct these tests on the ABZO sensor section of the motor.

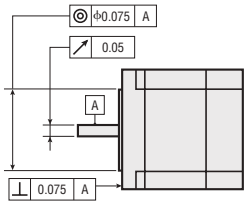

Rotation Direction

The figure shows the rotation directions seen from the output shaft. The rotation direction of the gear output shaft, which is seen from the output shaft of a standard type motor, differs depending on the gear type or gear ratio.
Refer to the table below.

Type	Gear Ratio	Rotation Direction seen from the Output Shaft
TS Geared Type	**3.6**, **7.2**, **10**	Same direction
	20, **30**	Reverse direction
FC Geared Type **PS** Geared Type **HPG** Geared Type	Total reduction gear ratio	Same direction
Harmonic Geared Type	Total reduction gear ratio	Reverse direction

● Standard type motor

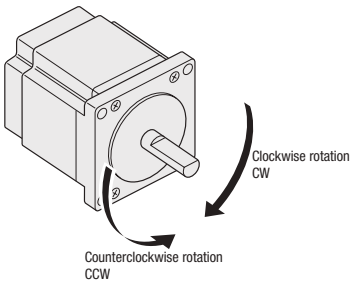

Motor Installation

Since the ABZO sensor is easily affected by magnetism, exercise caution when determining the location to install the motor.

●Installing the motor the frame size 28 mm or less

When installing multiple motors next to each other, make sure that the distance between two motors in the horizontal and vertical directions is at least the frame size of the adjoining motor.

● Reference

Adjoining Motor	A
Frame size 20 mm	20
Frame size 28 mm	28
Frame size 42 mm	42
Frame size 60 mm	60

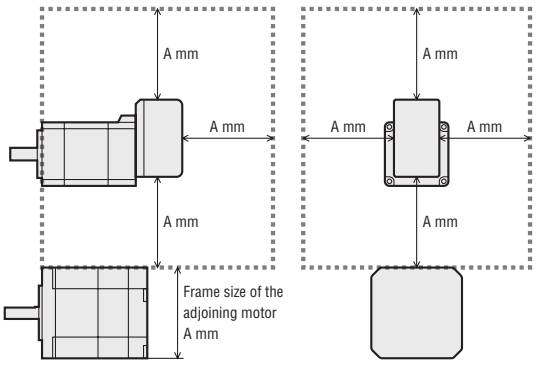

● Make sure that the distance between the two motors is at least the frame size of the adjoining motor (A mm).

●When installing motors in an environment in which a magnetic field is generated

Ensure that the magnetic flux density on the ABZO sensor surface does not exceed the values listed below.

Motor Frame Size	Magnetic Flux Density
28 mm or less	2 mT*
42 mm or more	10 mT

*If the magnetic flux density is between more than 1 mT and 2 mT, the ambient temperature must be between more than 20°C and 40°C.

Permissible Radial Load/Permissible Axial Load

Unit: N

Type	Motor Frame Size	Product Name	Gear Ratio	Permissible Radial Load (Distance from Shaft End mm)					Permissible Axial Load
				0	5	10	15	20	
Standard Type	20 mm	**AZM14**, **AZM15**	—	12	15	—	—	—	3
	28 mm	**AZM24**, **AZM26**		25	34	52	—	—	5
	42 mm	**AZM46**		35	44	58	85	—	15
		AZM48		30	35	44	58	85	
	60 mm	**AZM66**, **AZM69**		90	100	130	180	270	30
TS Geared Type	42 mm	**AZM46**	**3.6**, **7.2**, **10**	20	30	40	50	—	15
			20, **30**	40	50	60	70	—	
	60 mm	**AZM66**	**3.6**, **7.2**, **10**	120	135	150	165	180	40
			20, **30**	170	185	200	215	230	
FC Geared Type	42 mm	**AZM46**	**7.2**, **10**, **20**, **30**	180	200	220	250	—	100
	60 mm	**AZM66**		270	290	310	330	350	200
PS Geared Type	28 mm	**AZM24**	**7.2**, **10**	45	60	80	100	—	40
	42 mm	**AZM46**	**5**	70	80	95	120	—	100
			7.2	80	90	110	140	—	
			10	85	100	120	150	—	
			25	120	140	170	210	—	
			36	130	160	190	240	—	
			50	150	170	210	260	—	
	60 mm	**AZM66**	**5**	170	200	230	270	320	200
			7.2	200	220	260	310	370	
			10	220	250	290	350	410	
			25	300	340	400	470	560	
			36	340	380	450	530	630	
			50	380	430	500	600	700	
HPG Geared Type	40 mm	**AZM46**	**5**	150	170	190	230	270	430
			9	180	200	230	270	320	510
	60 mm	**AZM66**	**5**	250	270	300	330	360	700
			15	360	380	420	460	510	980
Harmonic Geared Type	30 mm	**AZM24**	**50**, **100**	100	135	175	250	—	140
	42 mm	**AZM46**		180	220	270	360	510	220
	60 mm	**AZM66**		320	370	440	550	720	450

- The product names are described with text by which the product name can be identified.
- **PS** geared type and **HPG** geared type: The values shown in the table are those that enable a product life of 20,000 hours when either permissible radial load or permissible axial load is applied. For the product life of the gearhead, contact the nearest Oriental Motor sales office, or check the Oriental Motor website.

Radial Load and Axial Load

Distance from Shaft End [mm]

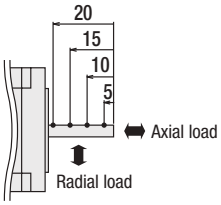

Permissible Moment Load

When eccentric load is applied to the installation surface of the output flange, load moment acts on the bearing.
Before using the motor, apply the formulas below to check that the axial load and load moment are within the specifications.

HPG Geared Type Flange Output Type

Product Name	Gear Ratio	Permissible Axial Load (N)	Permissible Moment Load (N·m)	Constant α(m)
AZM46	**5**	430	4.9	0.006
	9	510	5.9	
AZM66	**5**	700	12.0	0.011
	15	980	17.2	

m : Load mass (kg)
g : Gravitational acceleration (m/s^2)
F : External force (N)
L : Overhung distance (m)
a : Constant (m)
ΔF : Load applied to the output flange surface (N)
Fs : Permissible axial load (N)
ΔM : Load moment (N·m)
M : Permissible moment load (N·m)

Apply the formulas below to calculate the load moment.

Example 1: External force F (N) is applied to the protrusion L (m). It is applied horizontally to the center of the output flange.

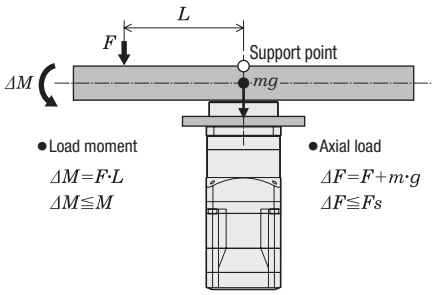

Example 2: External force F (N) is applied to the protrusion L (m). It is applied vertically to the center of the output flange.

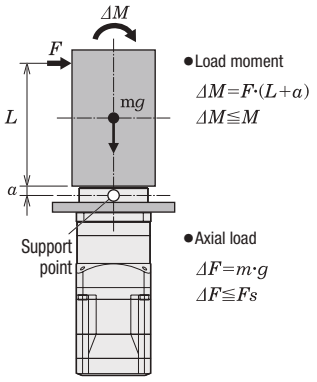

Harmonic Geared Type

Motor Frame Size	Permissible Axial Load (N)	Permissible Moment Load (N·m)	Constant α(m)
30 mm	140	2.9	0.0073
42 mm	220	5.6	0.009
60 mm	450	11.6	0.0114

Apply the formulas below to calculate the load moment.

Example 1: External force F (N) is applied to the protrusion L (m). It is applied horizontally to the center of the output flange.

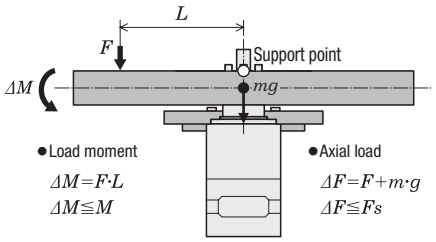

Example 2: External force F (N) is applied to the protrusion L (m). It is applied vertically to the center of the output flange.

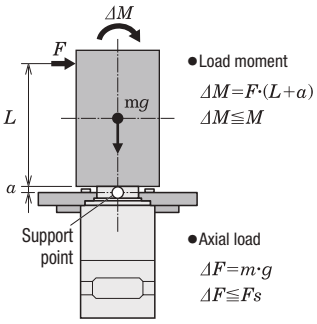

Accuracy of the Harmonic Geared Type

→ Page 06-35

Load Torque – Driver Input Current Characteristics

This is the relationship between the load torque and driver input current at each speed when the motor is actually operated. From these characteristics, the power supply capacity required for use in multi-axis operation can be estimated. For the geared type, convert to torque and speed by the motor shaft.

Motor shaft speed = Gear output shaft speed × Gear ratio [r/min]

$$\text{Motor shaft torque} = \frac{\text{Gear output shaft torque}}{\text{Gear ratio}} \text{ [N·m]}$$

24 VDC

AZM14

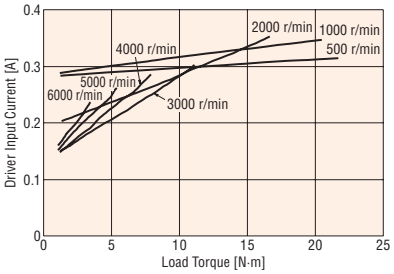

AZM46

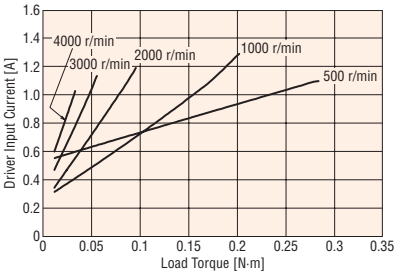

AZM15

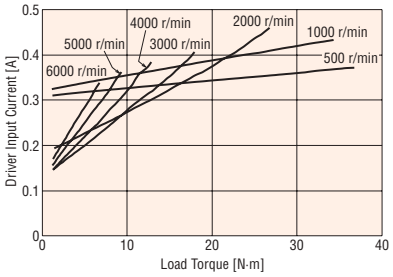

AZM48

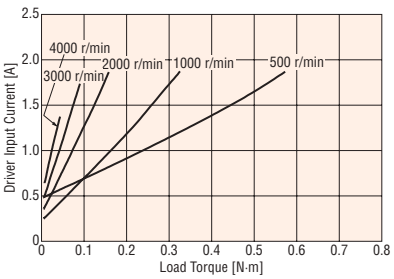

AZM24

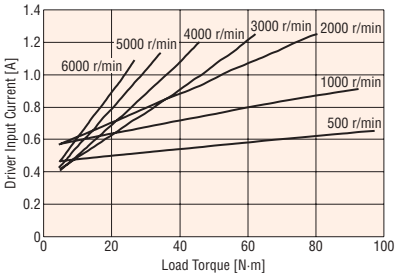

AZM66

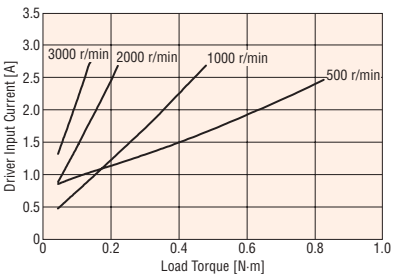

AZM26

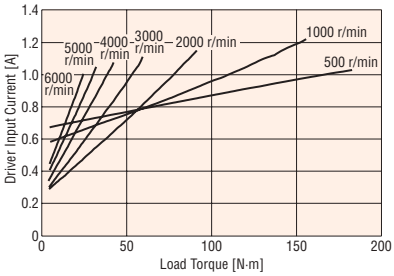

AZM69

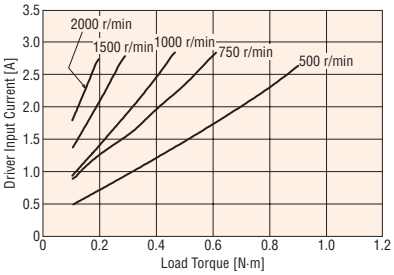

48 VDC

AZM46

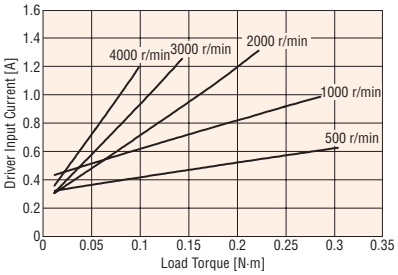

AZM48

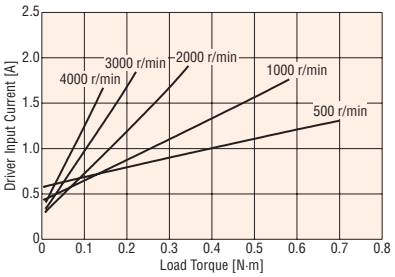

AZM66

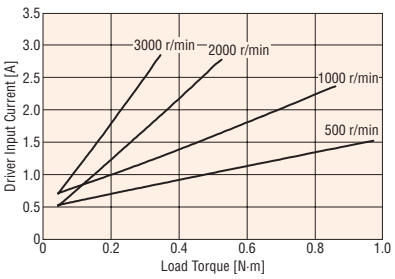

AZM69

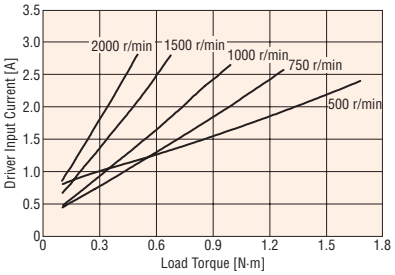

Dimensions (Unit: mm)

Motors

◇Standard Type

Frame Size 20 mm

2D & 3D CAD

Product Name	L	Mass kg	2D CAD
AZM14AK	50	0.08	B1212
AZM15AK	60	0.1	B1213

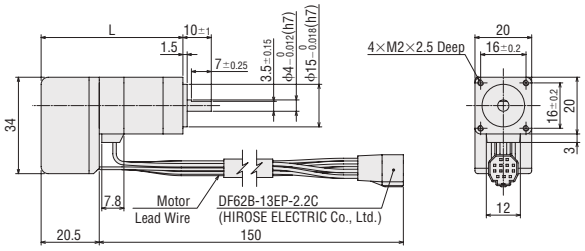

Frame Size 28 mm

2D & 3D CAD

Product Name	L	Mass kg	2D CAD
AZM24AK	54.5	0.15	B1214
AZM26AK	74	0.24	B1215

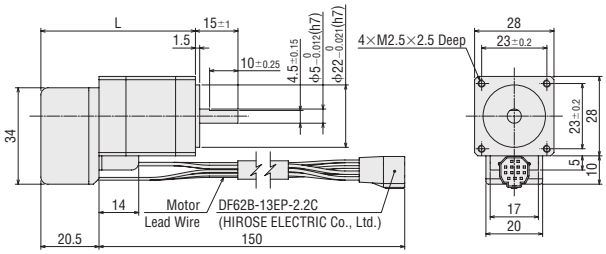

Frame Size 42 mm

2D & 3D CAD

Shaft Shape	Product Name	Mass kg	2D CAD
Single Sided Milling	**AZM46AK**	0.44	B1092
Straight	**AZM46A0K**		B1288

Single Sided Milling

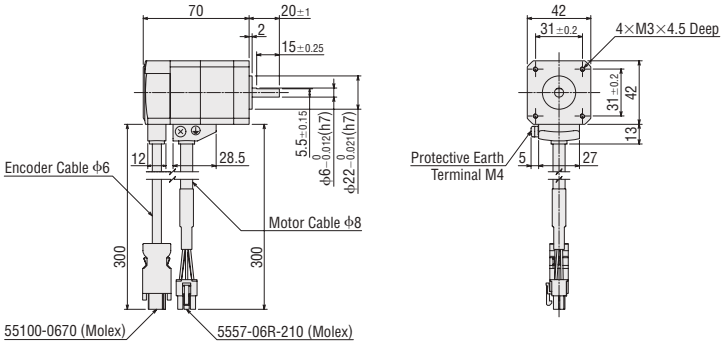

Straight

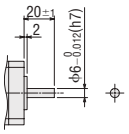

Frame Size 42 mm

2D & 3D CAD

Shaft Shape	Product Name	Mass kg	2D CAD
Single Sided Milling	**AZM48AK**	0.68	B1312
Straight	**AZM48A0K**		B1289
With Key	**AZM48A1K**		B1299

Single Sided Milling

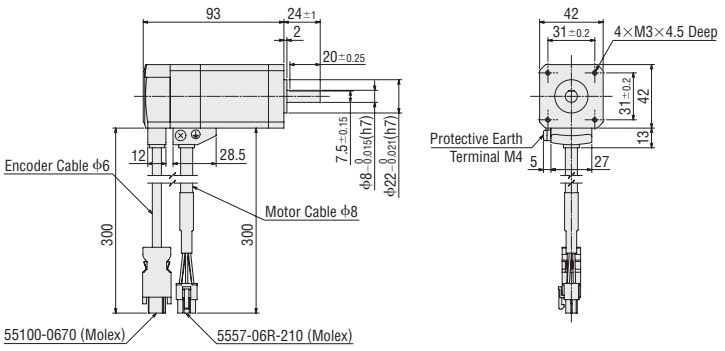

Straight

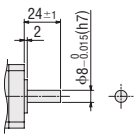

With Key

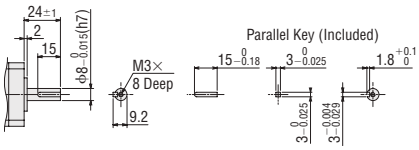

Frame Size 60 mm

2D & 3D CAD

Shaft Shape	Product Name	L	Mass kg	2D CAD
Single Sided Milling	**AZM66AK**	72	0.91	B1093
Straight	**AZM66A0K**			B1290
With Key	**AZM66A1K**			B1300
Single Sided Milling	**AZM69AK**	97.5	1.4	B1129
Straight	**AZM69A0K**			B1291
With Key	**AZM69A1K**			B1301

Single Sided Milling

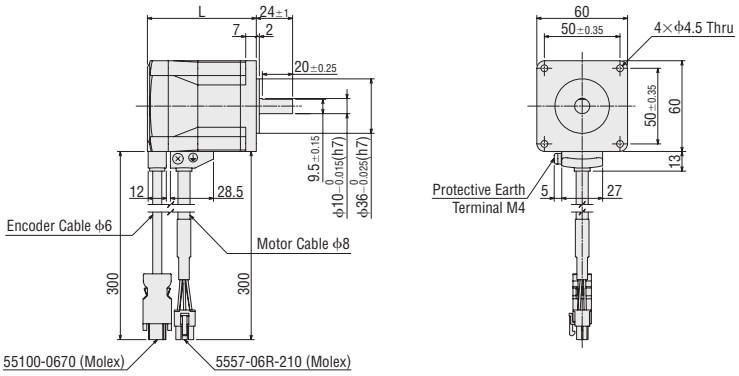

Straight

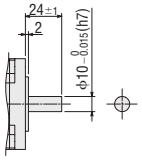

With Key

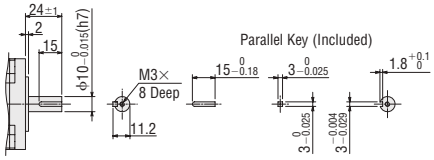

◇Standard Type with Electromagnetic Brake

Frame Size 42 mm

2D & 3D CAD

Shaft Shape	Product Name	Mass kg	2D CAD
Single Sided Milling	**AZM46MK**	0.61	B1154
Straight	**AZM46M0K**		B1294

Single Sided Milling

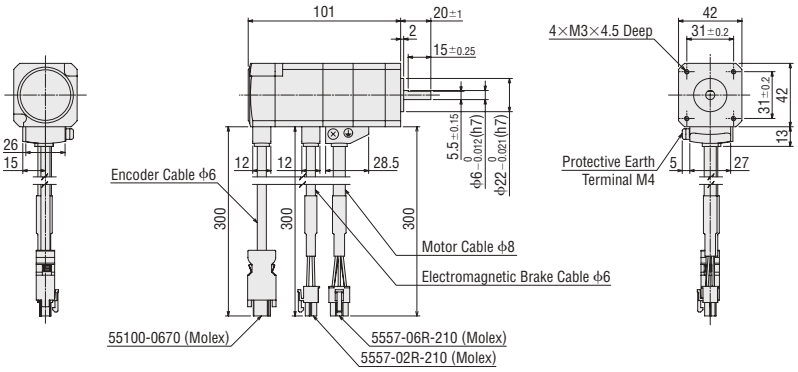

Straight

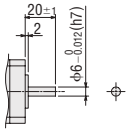

Frame Size 60 mm

2D & 3D CAD

Shaft Shape	Product Name	L	Mass kg	2D CAD
Single Sided Milling	**AZM66MK**	118	1.3	B1155
Straight	**AZM66M0K**			B1295
With Key	**AZM66M1K**			B1305
Single Sided Milling	**AZM69MK**	143.5	1.8	B1156
Straight	**AZM69M0K**			B1296
With Key	**AZM69M1K**			B1306

Single Sided Milling

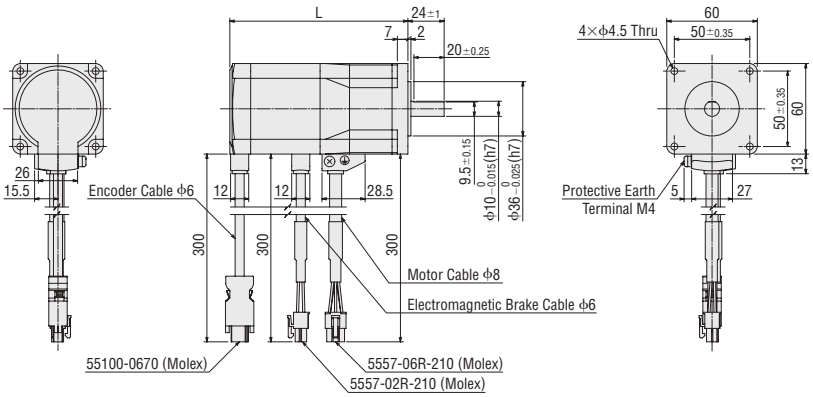

Straight

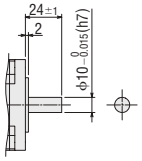

With Key

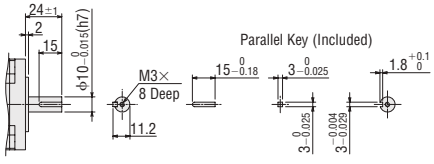

◇TS Geared Type

Frame Size 42 mm

2D & 3D CAD

Cable Drawing Direction	Product Name	Gear Ratio	Mass kg	2D CAD
Downward	**AZM46AK-TS□**	**3.6, 7.2, 10, 20, 30**	0.59	B1157
Right	**AZM46AK-TS□R**			B1272
Upward	**AZM46AK-TS□U**			B1270
Left	**AZM46AK-TS□L**			B1271

● Cable Drawing Direction

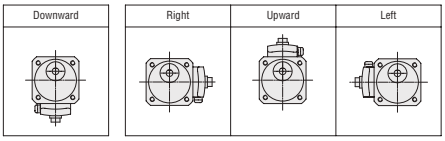

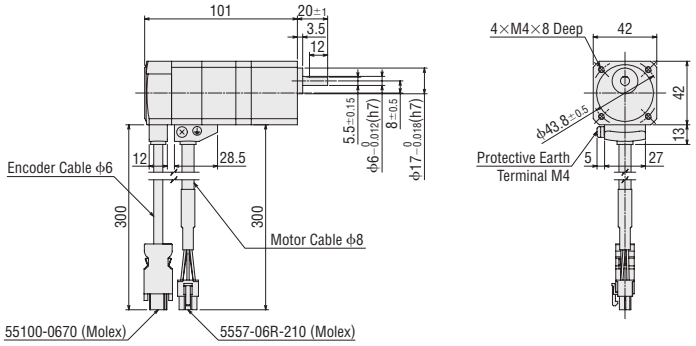

Frame Size 60 mm

2D & 3D CAD

Cable Drawing Direction	Product Name	Gear Ratio	Mass kg	2D CAD
Downward	**AZM66AK-TS□**	**3.6, 7.2, 10, 20, 30**	1.3	B1158
Right	**AZM66AK-TS□R**			B1275
Upward	**AZM66AK-TS□U**			B1273
Left	**AZM66AK-TS□L**			B1274

● Cable Drawing Direction

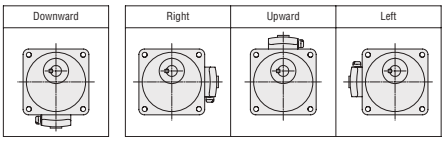

● Installation Screws: M4×60 P0.7 (4 pieces included)

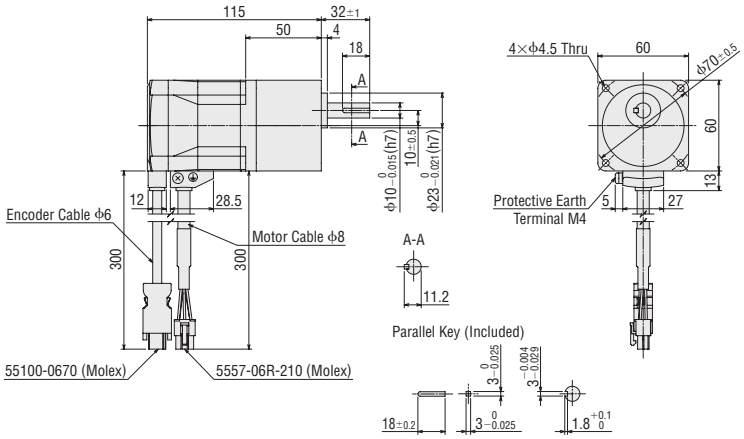

◇TS Geared Type with Electromagnetic Brake

Frame Size 42 mm

2D & 3D CAD

Cable Drawing Direction	Product Name	Gear Ratio	Mass kg	2D CAD
Downward	**AZM46MK-TS□**	**3.6, 7.2, 10, 20, 30**	0.76	B1216
Right	**AZM46MK-TS□R**			B1284
Upward	**AZM46MK-TS□U**			B1282
Left	**AZM46MK-TS□L**			B1283

● Cable Drawing Direction

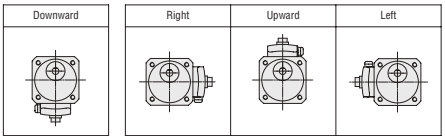

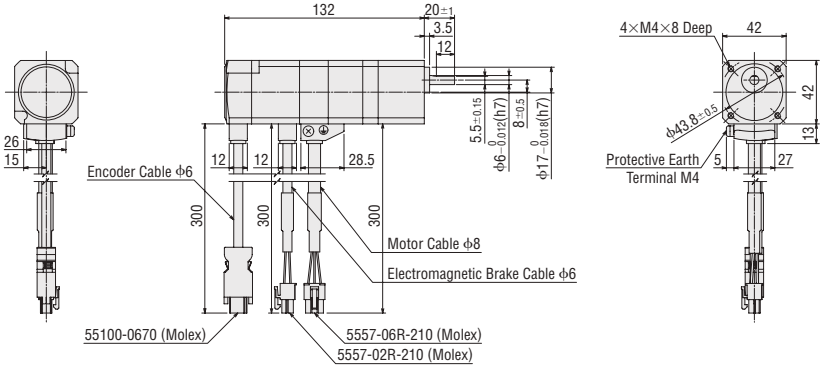

● A number indicating the gear ratio is entered where the box ■ is located within the product name.

Frame Size 60 mm

2D & 3D CAD

Cable Drawing Direction	Product Name	Gear Ratio	Mass kg	2D CAD
Downward	**AZM66MK-TS■**	**3.6, 7.2, 10, 20, 30**	1.7	B1217
Right	**AZM66MK-TS■R**			B1287
Upward	**AZM66MK-TS■U**			B1285
Left	**AZM66MK-TS■L**			B1286

●Cable Drawing Direction

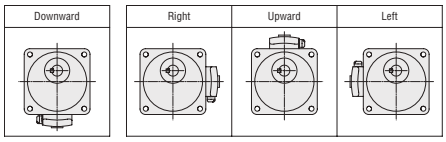

●Installation Screws: M4×60 P0.7 (4 pieces included)

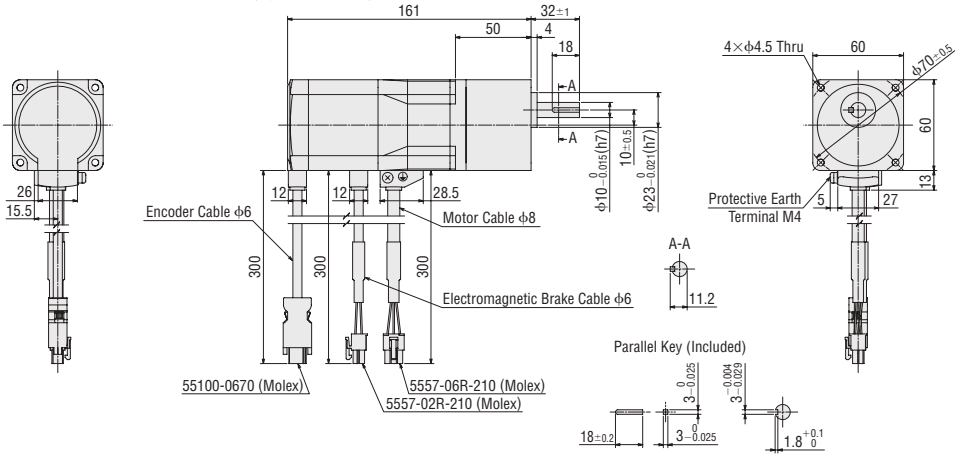

◇FC Geared Type

Frame Size 42 mm Cable Drawing Direction Upward

2D & 3D CAD

Product Name	Gear Ratio	Mass kg	2D CAD
AZM46AK-FC■UA	**7.2, 10, 20, 30**	0.79	B1314

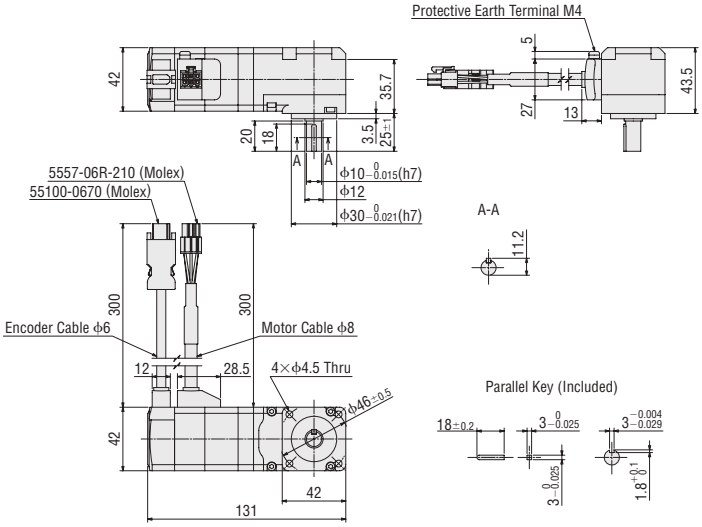

Frame Size 42 mm Cable Drawing Direction Downward

2D & 3D CAD

Product Name	Gear Ratio	Mass kg	2D CAD
AZM46AK-FC■DA	**7.2, 10, 20, 30**	0.79	B1313

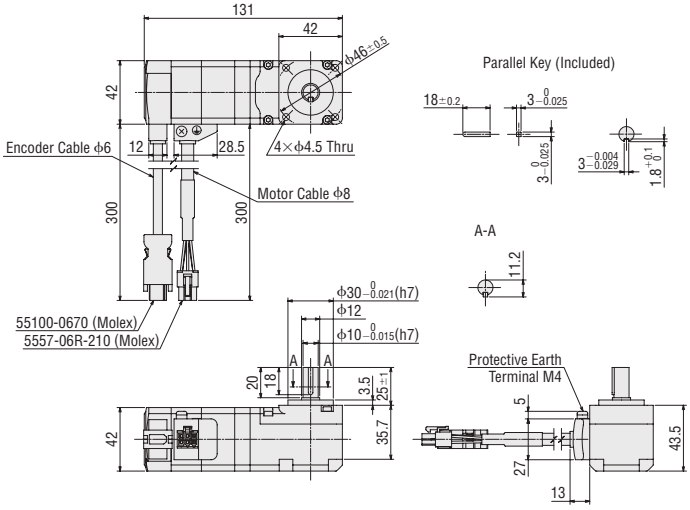

●A number indicating the gear ratio is entered where the box ■ is located within the product name.

Frame Size 60 mm Cable Drawing Direction Upward 2D & 3D CAD

Product Name	Gear Ratio	Mass kg	2D CAD
AZM66AK-FC■UA	**7.2**, **10**, **20**, **30**	1.8	B1318

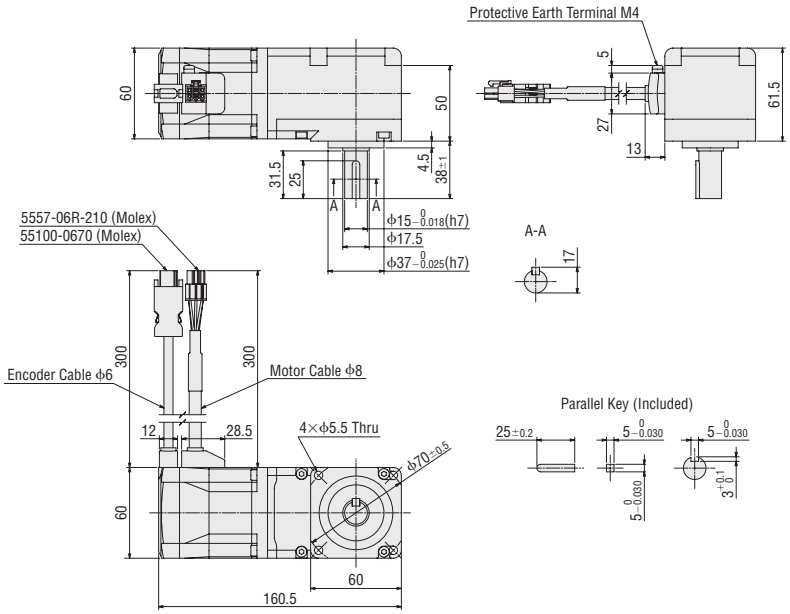

Frame Size 60 mm Cable Drawing Direction Downward 2D & 3D CAD

Product Name	Gear Ratio	Mass kg	2D CAD
AZM66AK-FC■DA	**7.2**, **10**, **20**, **30**	1.8	B1317

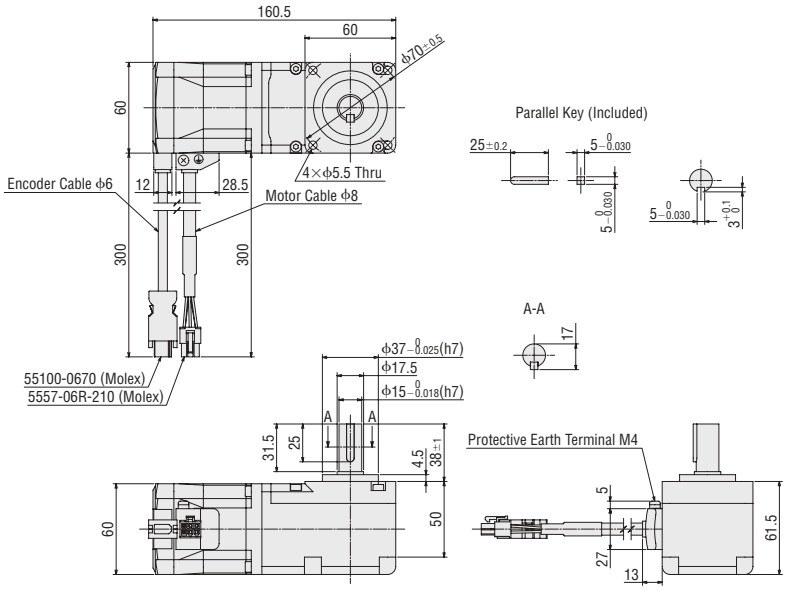

● A number indicating the gear ratio is entered where the box ■ is located within the product name.

◇**FC** Geared Type with Electromagnetic Brake

Frame Size 42 mm　Cable Drawing Direction　Upward　2D & 3D CAD

Product Name	Gear Ratio	Mass kg	2D CAD
AZM46MK-FC□UA	**7.2**, **10**, **20**, **30**	0.96	B1316

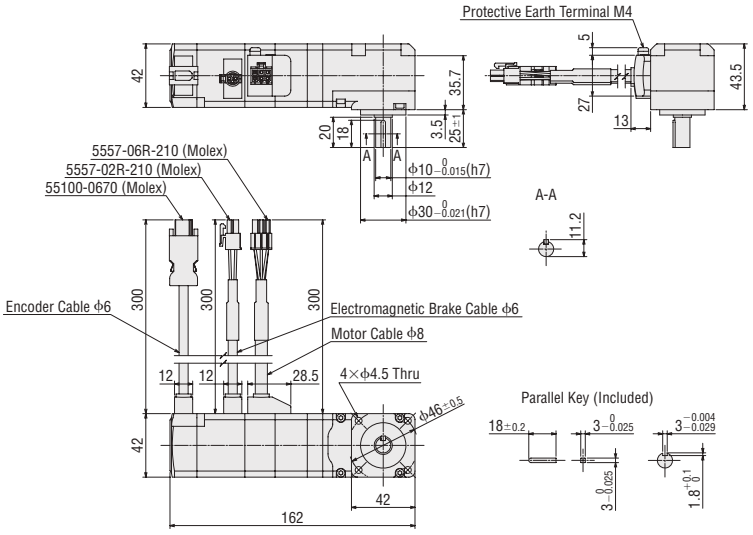

Frame Size 42 mm　Cable Drawing Direction　Downward　2D & 3D CAD

Product Name	Gear Ratio	Mass kg	2D CAD
AZM46MK-FC□DA	**7.2**, **10**, **20**, **30**	0.96	B1315

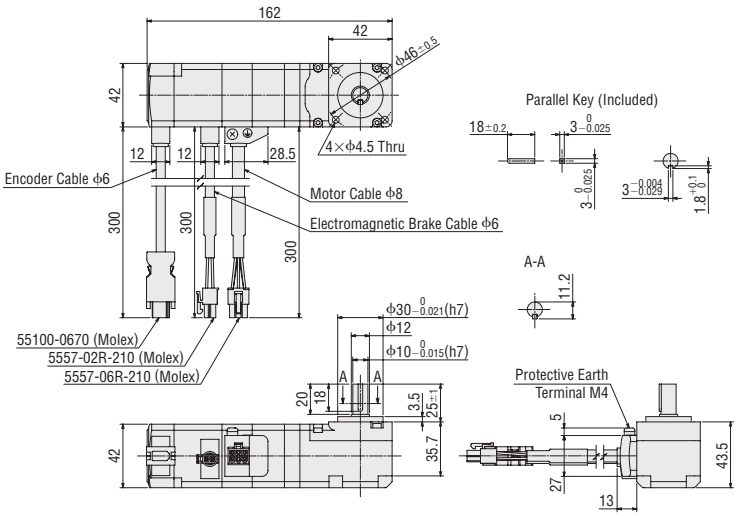

●A number indicating the gear ratio is entered where the box ■ is located within the product name.

Frame Size 60 mm Cable Drawing Direction Upward 2D & 3D CAD

Product Name	Gear Ratio	Mass kg	2D CAD
AZM66MK-FC□UA	**7.2**, **10**, **20**, **30**	2.2	B1320

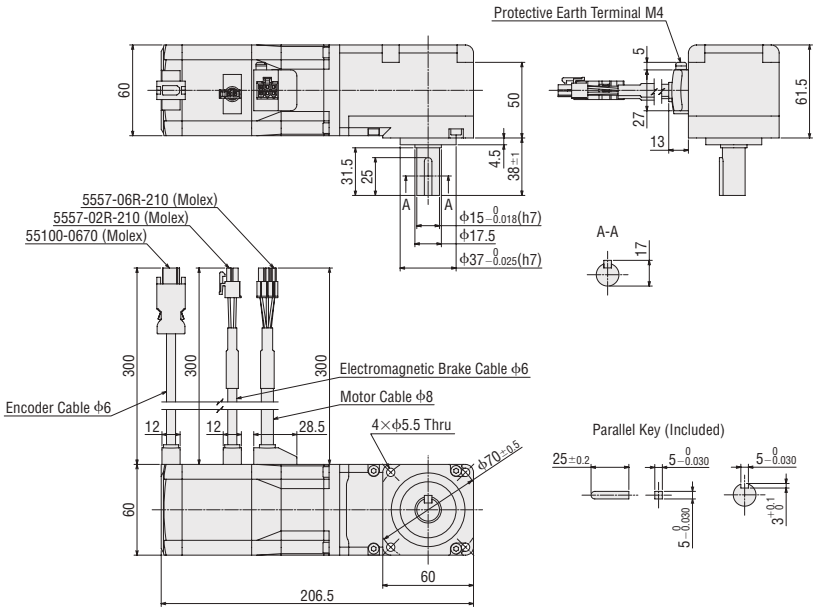

Frame Size 60 mm Cable Drawing Direction Downward 2D & 3D CAD

Product Name	Gear Ratio	Mass kg	2D CAD
AZM66MK-FC□DA	**7.2**, **10**, **20**, **30**	2.2	B1319

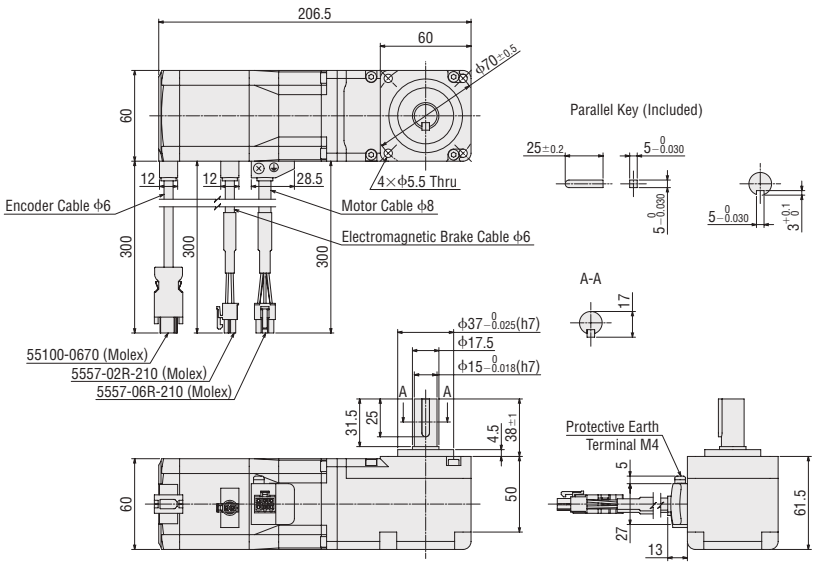

● A number indicating the gear ratio is entered where the box ■ is located within the product name.

◇**PS** Geared Type

Frame Size 28 mm

2D & 3D CAD

Product Name	Gear Ratio	Mass kg	2D CAD
AZM24AK-PS□	**7.2, 10**	0.25	B1366

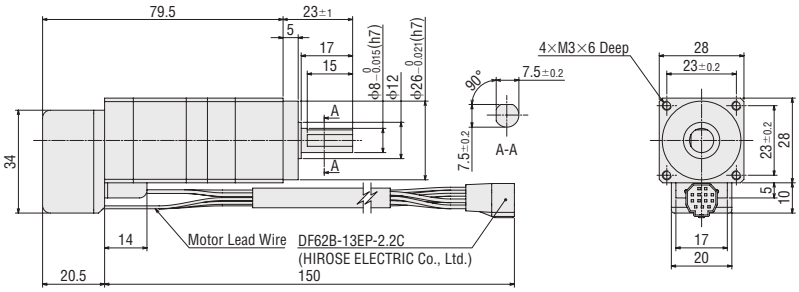

Frame Size 42 mm

2D & 3D CAD

Product Name	Gear Ratio	L	Mass kg	2D CAD
AZM46AK-PS□	**5, 7.2, 10**	98	0.64	B1159
	25, 36, 50	121.5	0.79	B1160

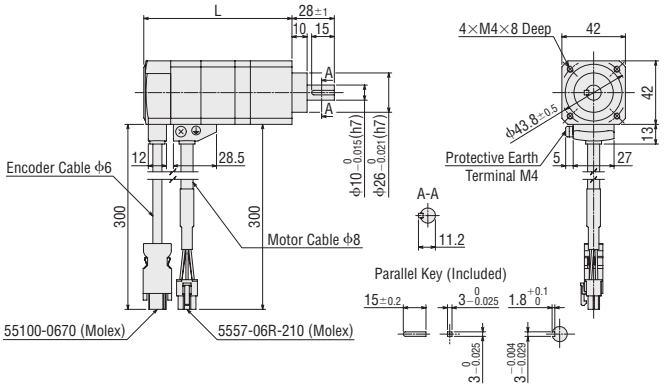

Frame Size 60 mm

2D & 3D CAD

Product Name	Gear Ratio	L	Mass kg	2D CAD
AZM66AK-PS□	**5, 7.2, 10**	104	1.3	B1161
	25, 36, 50	124	1.6	B1162

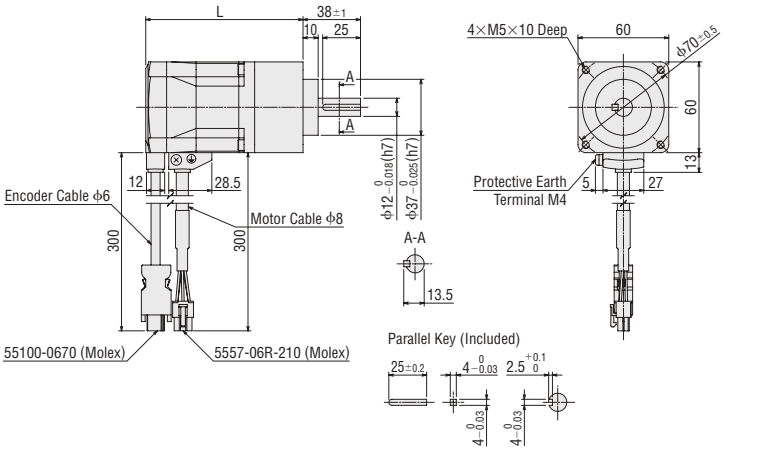

● A number indicating the gear ratio is entered where the box ■ is located within the product name.

◇**PS** Geared Type with Electromagnetic Brake

Frame Size 42 mm

2D & 3D CAD

Product Name	Gear Ratio	L	Mass kg	2D CAD
AZM46MK-PS□	**5**, **7.2**, **10**	129	0.81	B1218
	25, **36**, **50**	152	0.96	B1219

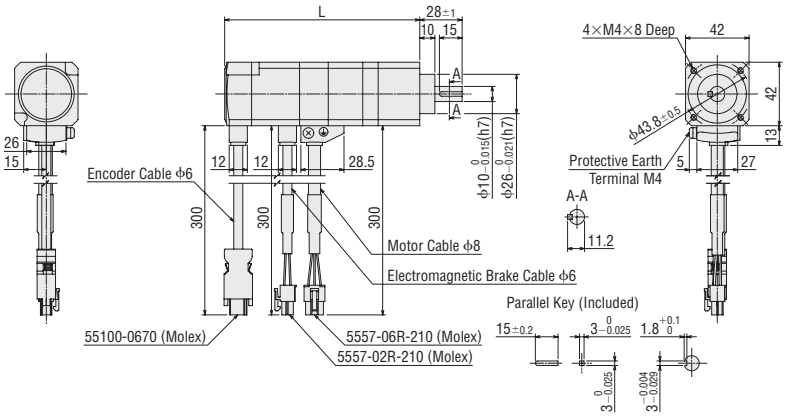

Frame Size 60 mm

2D & 3D CAD

Product Name	Gear Ratio	L	Mass kg	2D CAD
AZM66MK-PS□	**5**, **7.2**, **10**	150	1.7	B1220
	25, **36**, **50**	170	2.0	B1221

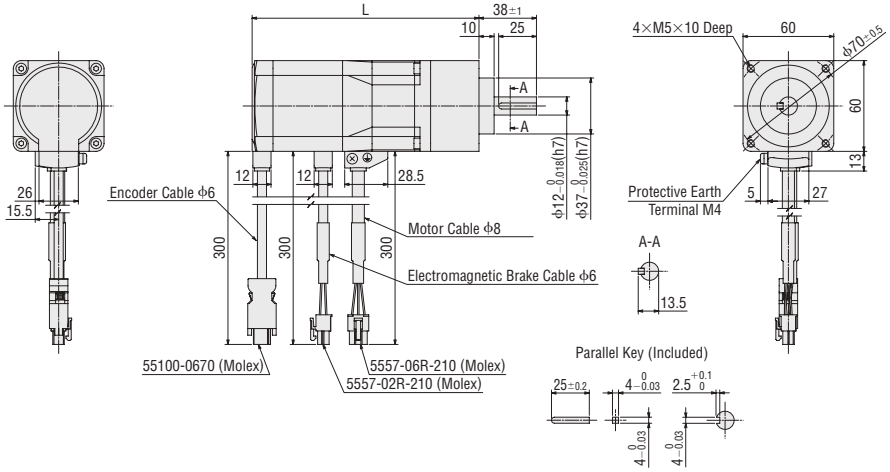

◇**HPG** Geared Type Shaft Output Type

Frame Size 40 mm

2D & 3D CAD

Product Name	Gear Ratio	Mass kg	2D CAD
AZM46AK-HP□	**5**, **9**	0.71	B1163

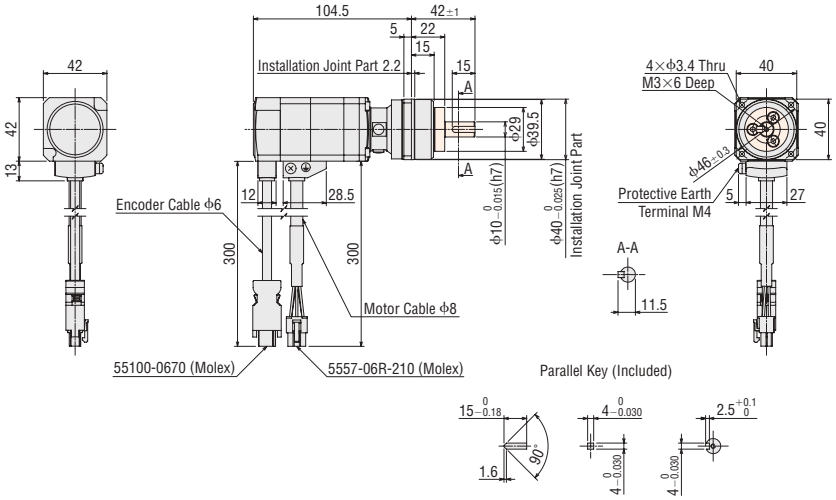

● The ▭ colored section for the dimensions indicates the rotating part.
● A number indicating the gear ratio is entered where the box ■ is located within the product name.

Frame Size 60 mm

2D & 3D CAD

Product Name	Gear Ratio	Mass kg	2D CAD
AZM66AK-HP■	**5, 15**	1.9	B1165

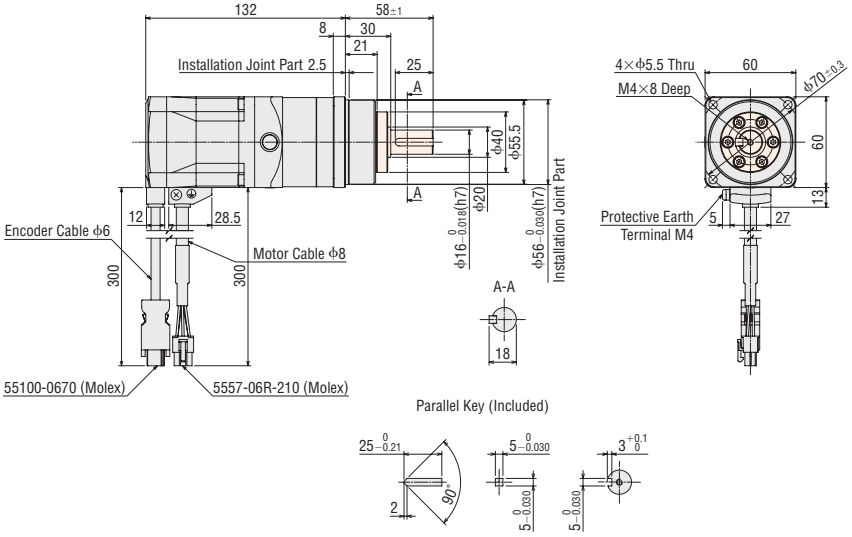

◇HPG Geared Type Flange Output Type

Frame Size 40 mm

2D & 3D CAD

Product Name	Gear Ratio	Mass kg	2D CAD
AZM46AK-HP■F	**5, 9**	0.66	B1164

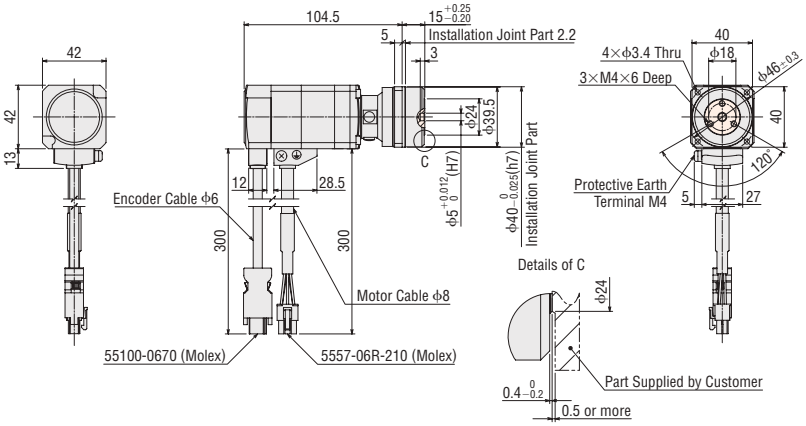

Frame Size 60 mm

2D & 3D CAD

Product Name	Gear Ratio	Mass kg	2D CAD
AZM66AK-HP■F	**5, 15**	1.8	B1166

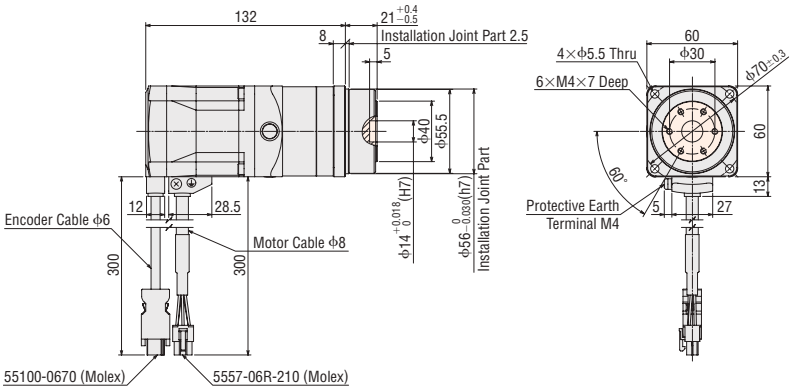

● The ▭ colored section for the dimensions indicates the rotating part.
● A number indicating the gear ratio is entered where the box ■ is located within the product name.

◇HPG Geared Type with Electromagnetic Brake Shaft Output Type

Frame Size 40 mm

2D & 3D CAD

Product Name	Gear Ratio	Mass kg	2D CAD
AZM46MK-HP■	**5, 9**	0.88	B1222

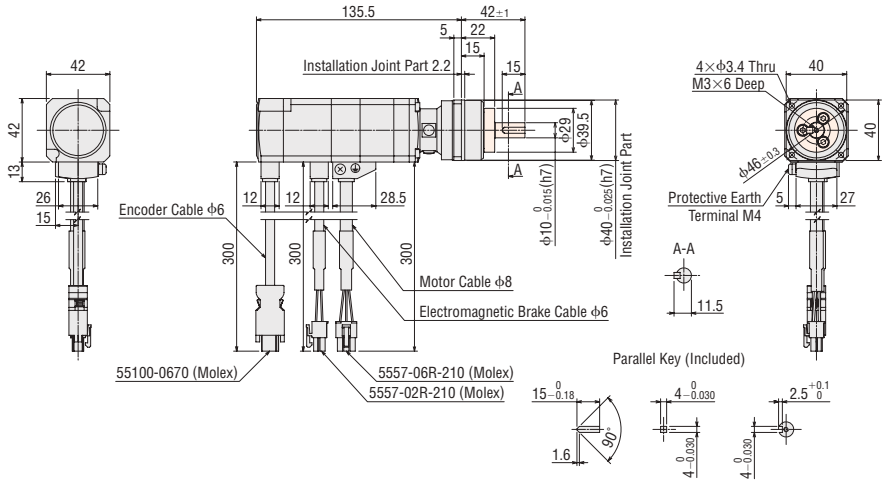

Frame Size 60 mm

2D & 3D CAD

Product Name	Gear Ratio	Mass kg	2D CAD
AZM66MK-HP■	**5, 15**	2.3	B1224

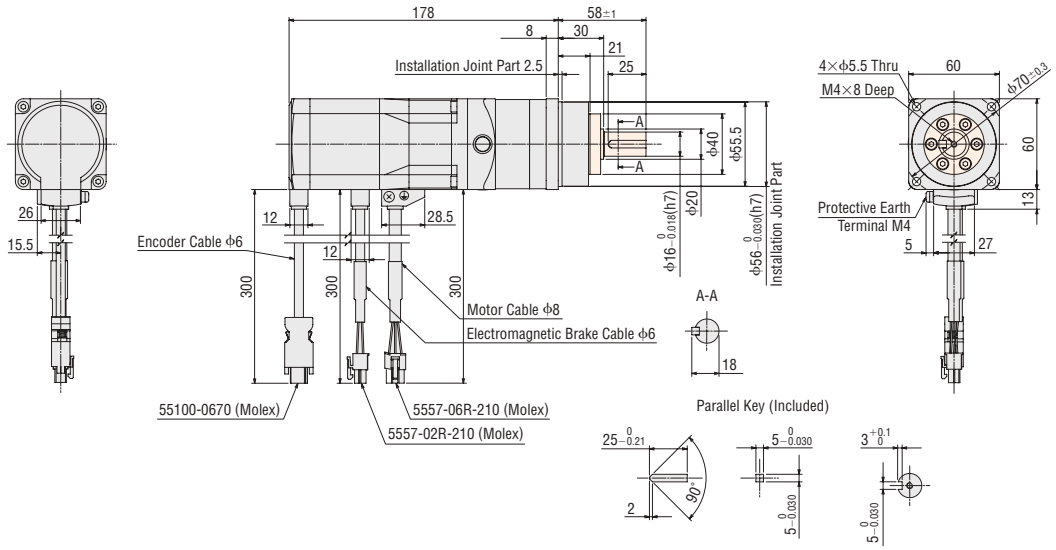

◇HPG Geared Type with Electromagnetic Brake Flange Output Type

Frame Size 40 mm

2D & 3D CAD

Product Name	Gear Ratio	Mass kg	2D CAD
AZM46MK-HP■F	**5, 9**	0.83	B1223

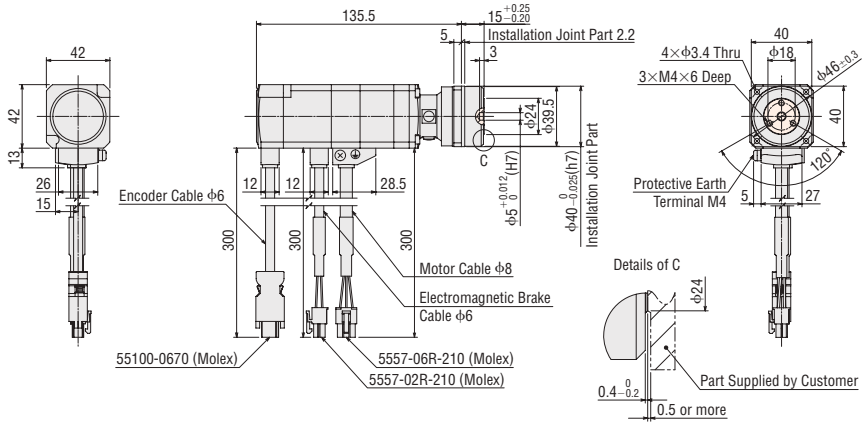

● The ▭ colored section for the dimensions indicates the rotating part.
● A number indicating the gear ratio is entered where the box ■ is located within the product name.

Frame Size 60 mm

2D & 3D CAD

Product Name	Gear Ratio	Mass kg	2D CAD
AZM66MK-HP■F	**5, 15**	2.2	B1225

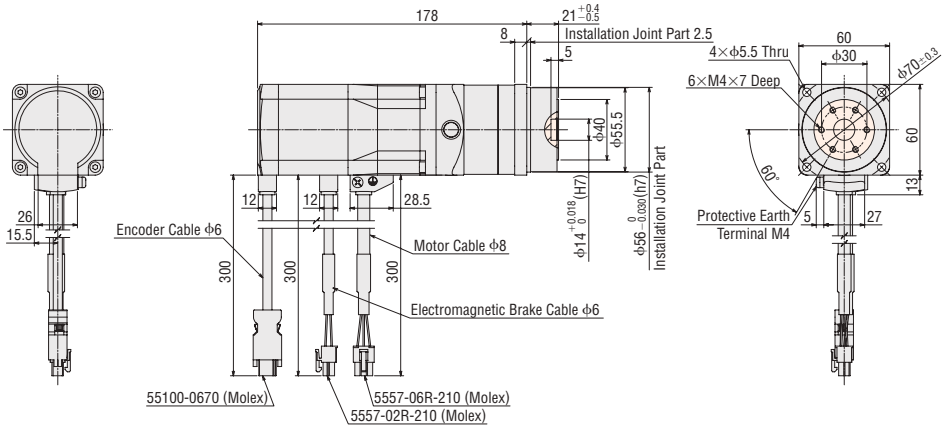

◇Harmonic Geared Type

Frame Size 30 mm

2D & 3D CAD

Product Name	Gear Ratio	Mass kg	2D CAD
AZM24AK-HS■	**50, 100**	0.24	B1367

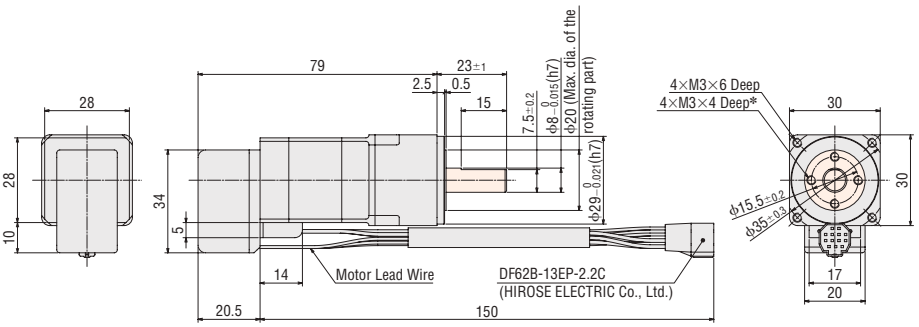

*On the dimensions, you cannot designate the positions of the output shaft and screw holes. Therefore, develop a design by using the size of the screw holes on the surface to which load is applied.

Frame Size 42 mm

2D & 3D CAD

Product Name	Gear Ratio	Mass kg	2D CAD
AZM46AK-HS■	**50, 100**	0.65	B1167

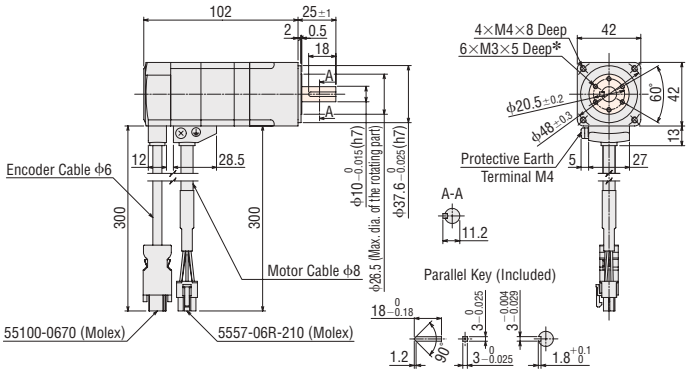

*On the dimensions, you cannot designate the positions of the output shaft and screw holes. Therefore, develop a design by using the size of the screw holes on the surface to which load is applied.

● The ▭ colored section for the dimensions indicates the rotating part.
● A number indicating the gear ratio is entered where the box ■ is located within the product name.

Frame Size 60 mm

2D & 3D CAD

Product Name	Gear Ratio	Mass kg	2D CAD
AZM66AK-HS□	**50, 100**	1.4	B1168

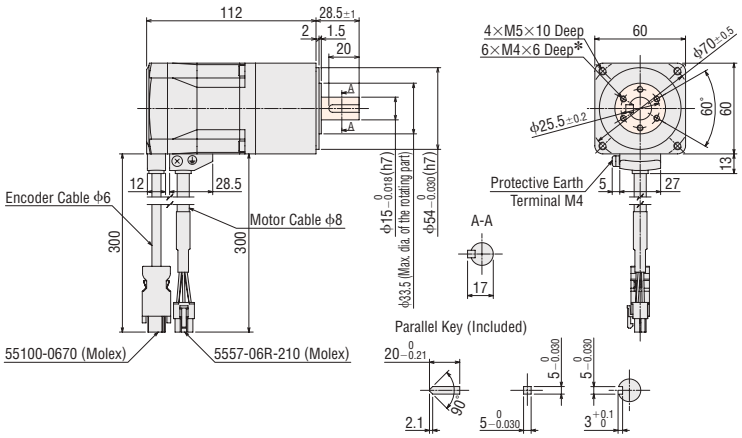

*On the dimensions, you cannot designate the positions of the output shaft and screw holes. Therefore, develop a design by using the size of the screw holes on the surface to which load is applied.

◇Harmonic Geared Type with Electromagnetic Brake

Frame Size 42 mm

2D & 3D CAD

Product Name	Gear Ratio	Mass kg	2D CAD
AZM46MK-HS□	**50, 100**	0.82	B1226

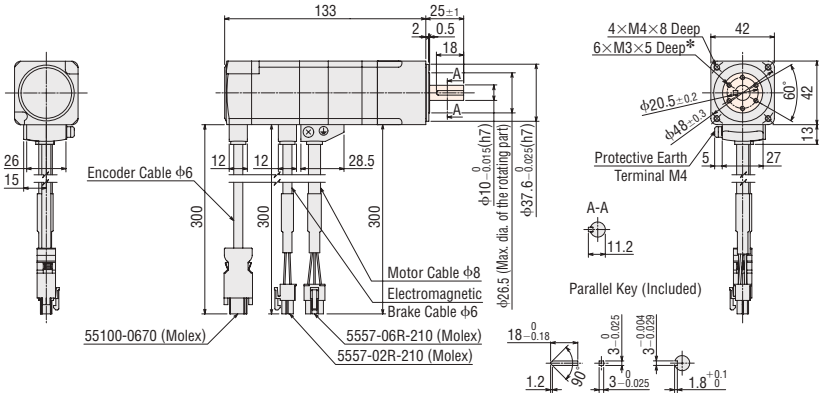

*On the dimensions, you cannot designate the positions of the output shaft and screw holes. Therefore, develop a design by using the size of the screw holes on the surface to which load is applied.

Frame Size 60 mm

2D & 3D CAD

Product Name	Gear Ratio	Mass kg	2D CAD
AZM66MK-HS□	**50, 100**	1.8	B1227

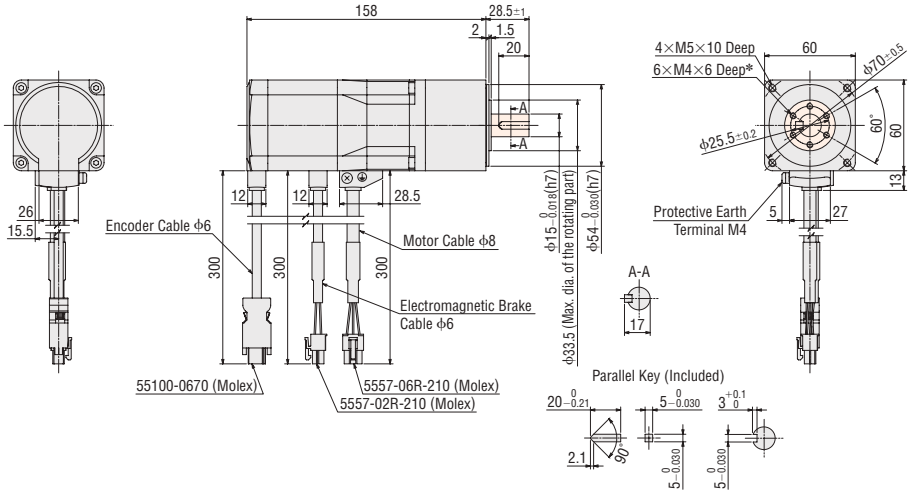

*On the dimensions, you cannot designate the positions of the output shaft and screw holes. Therefore, develop a design by using the size of the screw holes on the surface to which load is applied.

● The ▭ colored section for the dimensions indicates the rotating part.
● A number indicating the gear ratio is entered where the box □ is located within the product name.

Drivers

2D & 3D CAD

Type	Product Name	Mass kg	2D CAD
Built-in Controller Type	**AZD-KD**	0.15	B1094
Pulse Input Type with RS-485 Communication	**AZD-KX**		
Pulse Input Type	**AZD-K**		B1096

● The dimensions below is the drawing of a built-in controller type. The external dimensions and accessories are common to all driver types.

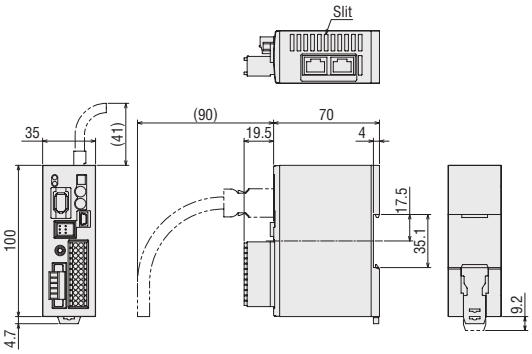

● Accessories

Main Power Supply/Electromagnetic Brake Connector (CN1)
Connector: MC1,5/5-STF-3,5
(PHOENIX CONTACT)

I/O Signals Connector (CN4)
Connector: DFMC1,5/12-ST-3,5
(PHOENIX CONTACT)

Connection Cable Sets/Flexible Connection Cable Sets

[For **AZM14**, **AZM15**, **AZM24**, **AZM26**]

◇Cable for Motor

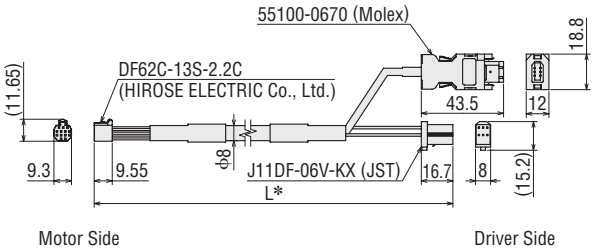

[For **AZM46**, **AZM48**, **AZM66**, **AZM69**]

◇Cable for Motor

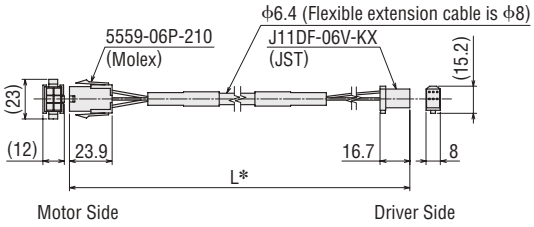

◇Cable for Encoder

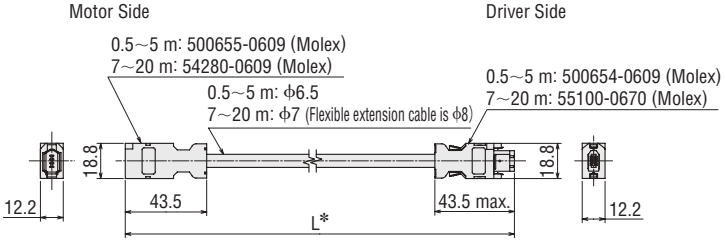

◇Cable for Electromagnetic Brake

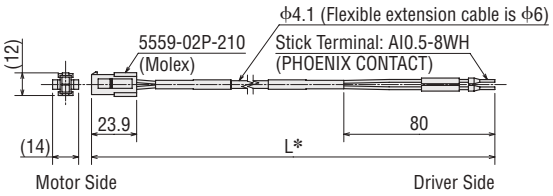

✱"L" is replaced by the length specified in Length L (m) in "■ Product Line" on page 06-71.

Note

● The motor cable and electromagnetic brake cable from the motor cannot be directly connected to a driver. To connect the motor to the driver, use a connection cable.

■Cautions for Using Connection Cables

➜ Page 06-55

Connection and Operation (Built-in controller type/Pulse input type with RS-485 communication)

Names and Functions of Driver Parts

Below is a photo of the built-in controller type.

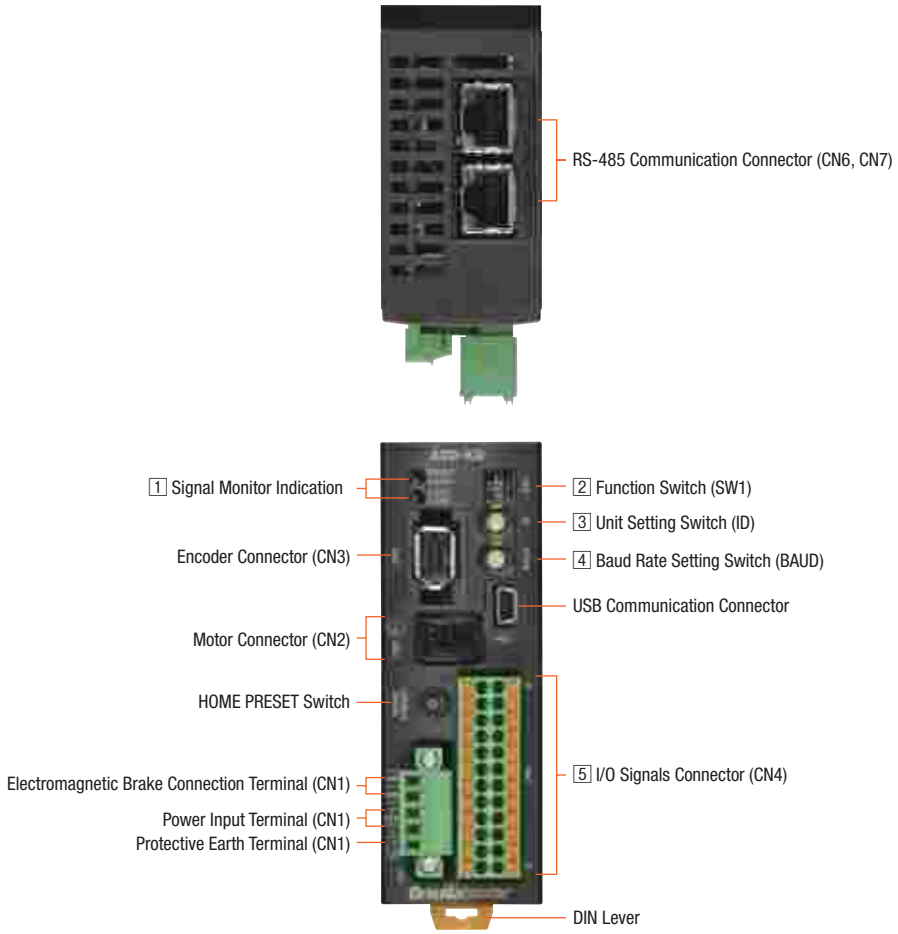

1 Signal Monitor Indication

◇LED Indicators

Indication	Color	Function	Lighting Condition
POWER	Green	Power supply indication	When power is applied
ALARM	Red	Alarm indication	When a protective function is activated (blinking)
C-DAT	Green	Communication indication	When communication data is being sent or received
C-ERR	Red	Communication error indication	When communication data is in error

2 Function Switch

Indication	No.	Function
SW1	1	Use in combination with the unit setting switch (ID) to set the axis number. (Factory setting) OFF
	2	Set the RS-485 communication protocol. (Factory setting) Built-in controller type: OFF Pulse input type with RS-485 communication: ON
	3	Set the terminating resistor (120 Ω) for RS-485 communication. (Factory setting) OFF (OFF: Terminating resistor not used ON: Terminating resistor used)
	4	

✻Configure both No. 3 and No. 4 to the same setting.

3 Unit Setting Switch

Indication	Function
ID	Set this when you use RS-485 communication. Set the unit number. (Factory setting) Built-in controller type: 0 Pulse input type with RS-485 communication: 1

4 Baud Rate Setting Switch

Indication	Function
BAUD	Set this when you use RS-485 communication. Set the baud rate. (Factory setting) Built-in controller type: 7 Pulse input type with RS-485 communication: 4

◇RS-485 Baud Rate Setting

No.	Baud Rate (bps)
0	9600
1	19200
2	38400
3	57600
4	115200
5	230400
6	Not used
7	Network converter
8~F	Not used

5 I/O Signals Connector (CN4)

For the pulse input type with RS-485 communication, No. 1, 2, 13, and 14 pins are dedicated to pulse input. For wire connection with the programmable controller, refer to "Pulse Input Types" on page 06-109.

Indication	Pin No.	Driver Type	Signal Name	Description	
CN4	1	Built-in controller type	IN0	START	This signal is used to start positioning operation.
		Pulse input type with RS-485 communication	CW+* [PLS+]	CW Pulse Input + [Pulse Input +]	This is the pulse signal that is input to operate the motor in the CW direction in the 2-pulse input method. The input method in the [ ] applies to the 1-pulse input method.
	2	Built-in controller type	IN2	M1	Uses the 3 bits, between M0, M1 and M2, to select the operating data number.
		Pulse input type with RS-485 communication	CCW+* [DIR+]	CCW Pulse Input + [Rotation Direction Input +]	This is the pulse signal that is input to operate the motor in the CCW direction in the 2-pulse input method. The input method in the [ ] applies to the 1-pulse input method.
	3	Common	IN4	ZHOME	Moves to home that has been set with the HOME/PRESET switch.
	4	Common	IN6	STOP	Stops the motor.
	5	Common	IN-COM [0-7]*	IN0~IN7 Input Common	
	6	Common	IN8	FW-JOG	Starts the JOG operation.
	7	Common	OUT0	HOME-END	When home position has been established, it will be output when the high-speed return-to-home operation is completed.
	8	Common	OUT2	PLS-RDY	Not used.
	9	Common	OUT4	MOVE	Output during motor operation.
	10	Common	OUT-COM*	Output Common	
	11	Common	ASG+	A-Phase Pulse Output +	
	12	Common	BSG+	B-Phase Pulse Output +	
	13	Built-in controller type	IN1	M0	Uses the 3 bits, between M0, M1 and M2, to select the operating data number.
		Pulse input type with RS-485 communication	CW−* [PLS−]	CW Pulse Input − [Pulse Input −]	This is the pulse signal that is input to operate the motor in the CW direction in the 2-pulse input method. The input method in the [ ] applies to the 1-pulse input method.
	14	Built-in controller type	IN3	M2	Uses the 3 bits, between M0, M1 and M2, to select the operating data number.
		Pulse input type with RS-485 communication	CCW−* [DIR−]	CCW Pulse Input − [Rotation Direction Input −]	This is the pulse signal that is input to operate the motor in the CCW direction in the 2-pulse input method. The input method in the [ ] applies to the 1-pulse input method.
	15	Common	IN5	FREE	Stops motor excitation.
	16	Common	IN7	ALM-RST	Resets the alarms.
	17	Common	IN-COM [8-9]*	IN8, IN9 Input Common	
	18	Common	IN9	RV-JOG	Starts the JOG operation.
	19	Common	OUT1	IN-POS	Outputs when the motor operation is finished.
	20	Common	OUT3	READY	Outputs when the driver is ready for operation.
	21	Common	OUT5	ALM-B	Outputs the alarm status of the driver (Normal close).
	22	Common	GND*	Ground	
	23	Common	ASG−	A-Phase Pulse Output −	
	24	Common	BSG−	B-Phase Pulse Output −	

● You can set functions to assign by using parameters. Initial values are shown above. For details, refer to “Functions” in the Operating Manual of the **AZ** Series.

*Initial settings cannot be changed.

Connection Diagram

◇Connections with Peripheral Equipment

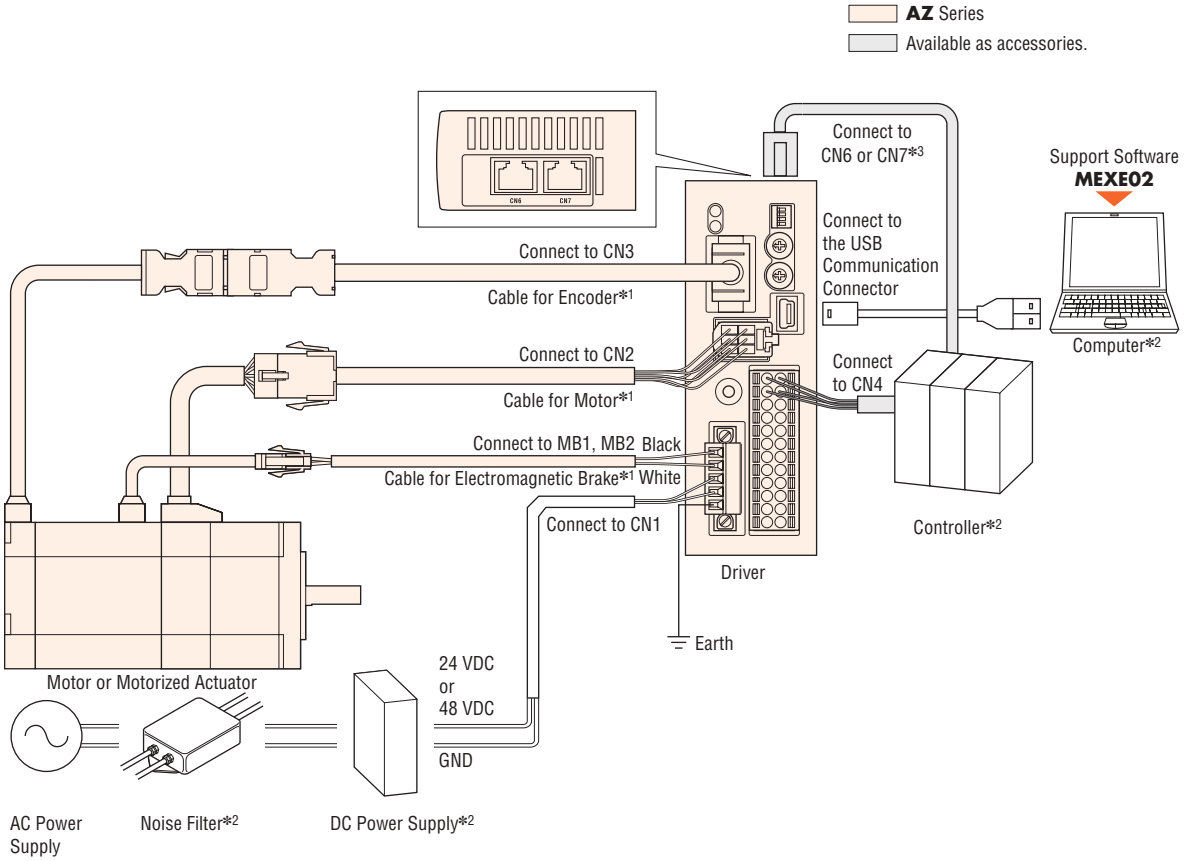

*1 Keep the wiring distance between the motor and driver to 20 m or less.
*2 Not supplied.
*3 Connect to the controller when controlling by RS-485 communication.

◇Connection of the USB Cable

Use this USB cable to connect the driver to the computer on which the support software **MEXE02** is installed.
Use a USB cable with the following specifications.

Specifications	USB2.0 (Full speed)
Cable	Length: 3 m or less
	Configuration: A to mini B

◇Connecting to the Programmable Controller (Built-in controller type)

•Connection Diagram for Connection with Current Sink Output Circuit

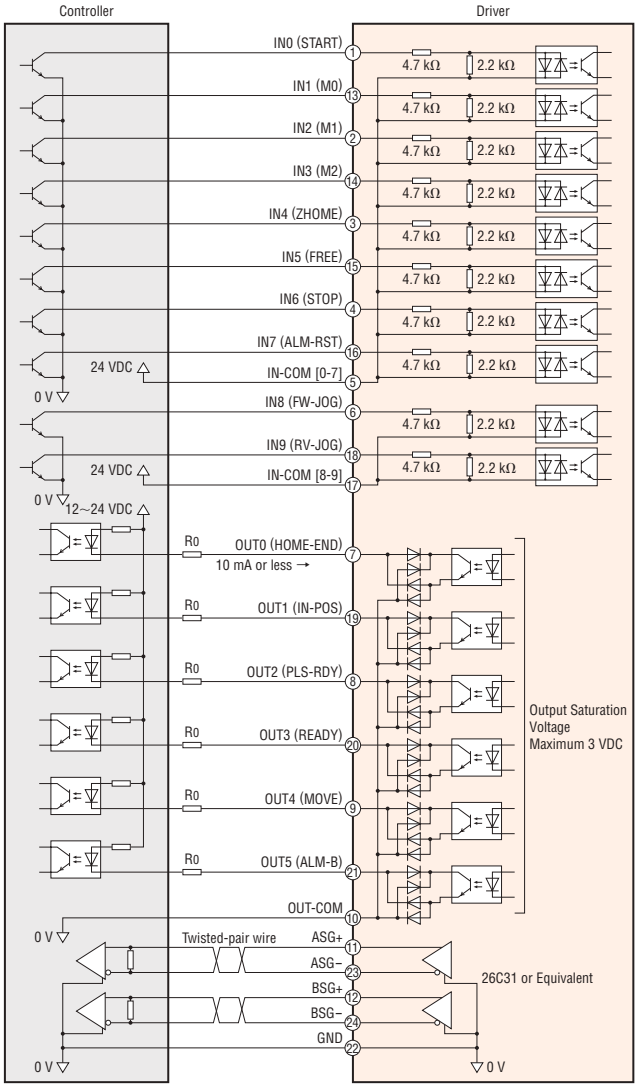

Note

- Use 24 VDC for the input signals.
- Use 12~24 VDC, 10 mA or less for the output signals. When the current value exceeds 10 mA, connect the external resistor R_0 to reduce the current to 10 mA or below.
- Provide a distance of 200 mm or longer between the signal lines and power lines (power supply lines, motor lines).
  Do not run the signal lines in the same piping as power lines or bundle them with power lines.
- If noise generated by the motor cable or power supply cable causes a problem with the specific wiring or layout, shield the cable or use ferrite cores.

•Connection Diagram for Connection with Current Source Output Circuit

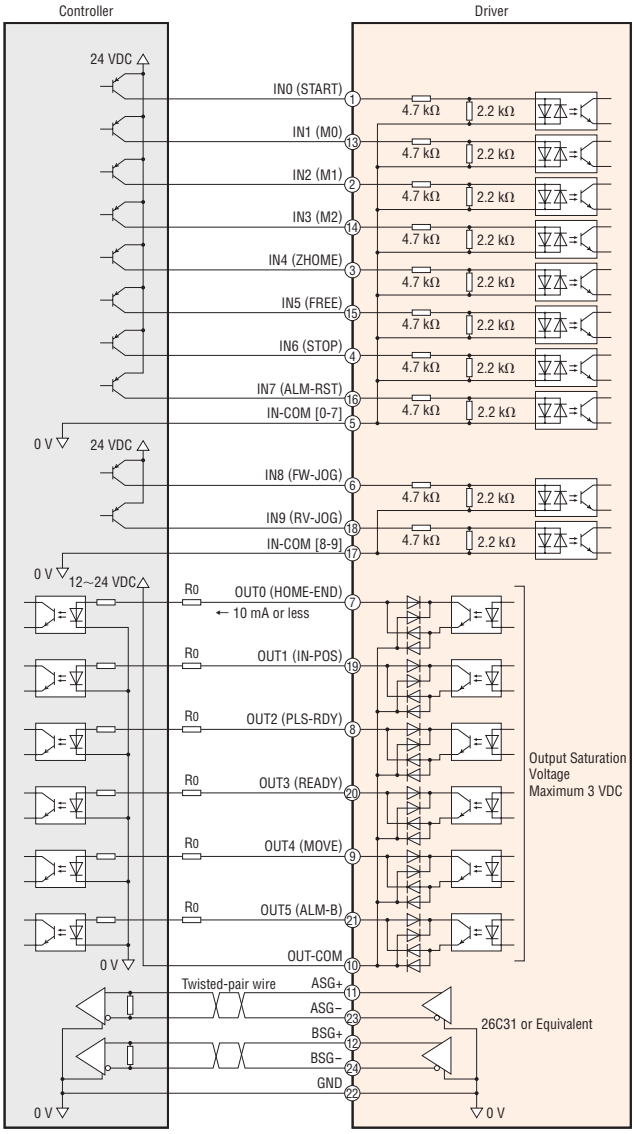

Note

- Use 24 VDC for the input signals.
- Use 12~24 VDC, 10 mA or less for the output signals. When the current value exceeds 10 mA, connect the external resistor R_0 to reduce the current to 10 mA or below.
- Provide a distance of 200 mm or longer between the signal lines and power lines (power supply lines, motor lines).
  Do not run the signal lines in the same piping as power lines or bundle them with power lines.
- If noise generated by the motor cable or power supply cable causes a problem with the specific wiring or layout, shield the cable or use ferrite cores.

◇Connecting to the Programmable Controller (Pulse input type with RS-485 communication)

The connection diagram is similar to that of the pulse input type. Refer to page 06-109.

Connection and Operation (Pulse input type)

Names and Functions of Driver Parts

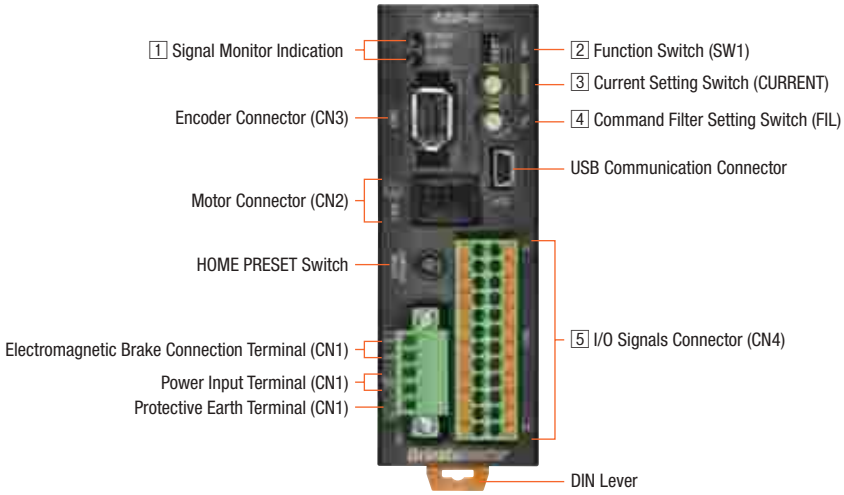

1 Signal Monitor Indication

◇LED Indicators

Indication	Color	Function	Lighting Condition
POWER	Green	Power supply indication	When power is applied
ALARM	Red	Alarm indication	When a protective function is activated (blinking)
READY	Green	READY output	When READY output is ON

2 Function Switch

Indication	No.	Function
SW1	1	Sets the resolution per one rotation of the motor output shaft (Factory setting: OFF [1000 p/r]).
	2	Sets the pulse input mode as either 1-pulse input mode or 2-pulse input mode (Factory setting: OFF [2-pulse input mode]).
	3, 4	Not used.

3 Current Setting Switch

Indication	Function
CURRENT	Set the base current, which is the basis of the running current and the standstill current (Factory setting: F).

4 Command Filter Setting Switch

Indication	Function
FIL	Adjust the responsiveness of the motor (Factory setting: 1).

5 I/O Signals Connector (CN4)

Indication	Pin No.	Signal Name	Description	
CN4	1	CW+ [PLS+]*	CW Pulse Input + [Pulse Input +]	This is the pulse signal that is input to operate the motor in the CW direction in the 2-pulse input method. The input method in the [ ] applies to the 1-pulse input method.
	2	CCW+ [DIR+]*	CCW Pulse Input + [Rotation Direction Input +]	This is the pulse signal that is input to operate the motor in the CCW direction in the 2-pulse input method. The input method in the [ ] applies to the 1-pulse input method.
	3	IN4	ZHOME	Moves to home that has been set with the HOME/PRESET switch.
	4	IN6	STOP	Stops the motor.
	5	IN-COM [4-7]*	IN4~IN7 Input Common	
	6	IN8	FW-JOG	Starts the JOG operation.
	7	OUT0	HOME-END	When home position has been established, it will be output when the high-speed return-to-home operation is completed.
	8	OUT2	PLS-RDY	Output when the pulse input preparation is completed.
	9	OUT4	MOVE	Output during motor operation.
	10	OUT-COM*	Output Common	
	11	ASG+	A-Phase Pulse Output +	
	12	BSG+	B-Phase Pulse Output +	
	13	CW− [PLS−]*	CW Pulse Input − [Pulse Input −]	This is the pulse signal that is input to operate the motor in the CW direction in the 2-pulse input method. The input method in the [ ] applies to the 1-pulse input method.
	14	CCW− [DIR−]*	CCW Pulse Input − [Rotation Direction Input −]	This is the pulse signal that is input to operate the motor in the CCW direction in the 2-pulse input method. The input method in the [ ] applies to the 1-pulse input method.
	15	IN5	FREE	Stops motor excitation.
	16	IN7	ALM-RST	Resets the alarms.
	17	IN-COM [8-9]*	IN8, IN9 Input Common	
	18	IN9	RV-JOG	Starts the JOG operation.
	19	OUT1	IN-POS	Outputs when the motor operation is finished.
	20	OUT3	READY	Outputs when the driver is ready for operation.
	21	OUT5	ALM-B	Outputs the alarm status of the driver (Normal close).
	22	GND*	Ground	
	23	ASG−	A-Phase Pulse Output −	
	24	BSG−	B-Phase Pulse Output −	

●You can set functions to assign by using parameters. Initial values are shown above. For details, refer to "Functions" in the Operating Manual of the **AZ** Series.
*Initial settings cannot be changed.

Connection Diagram

◇Connections with Peripheral Equipment

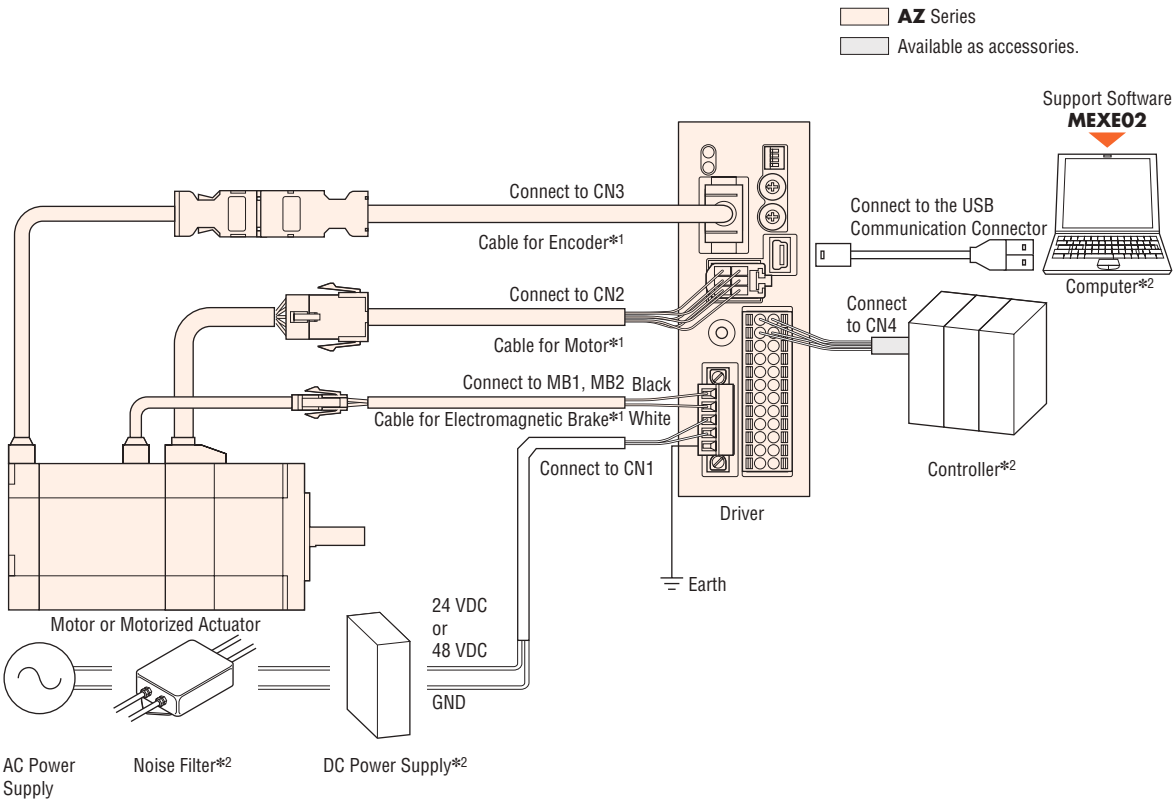

*1 Keep the wiring distance between the motor and driver to 20 m or less.
*2 Not supplied.

◇Connection of the USB Cable

Use this USB cable to connect the driver to the computer on which the support software **MEXE02** is installed.
Use a USB cable with the following specifications.

Specifications	USB2.0 (Full speed)
Cable	Length: 3 m or less
	Configuration: A to mini B

◇Connecting to the Programmable Controller (Pulse input type)

•Connection Diagram for Connection with Current Sink Output Circuit

When the pulse input is the line driver

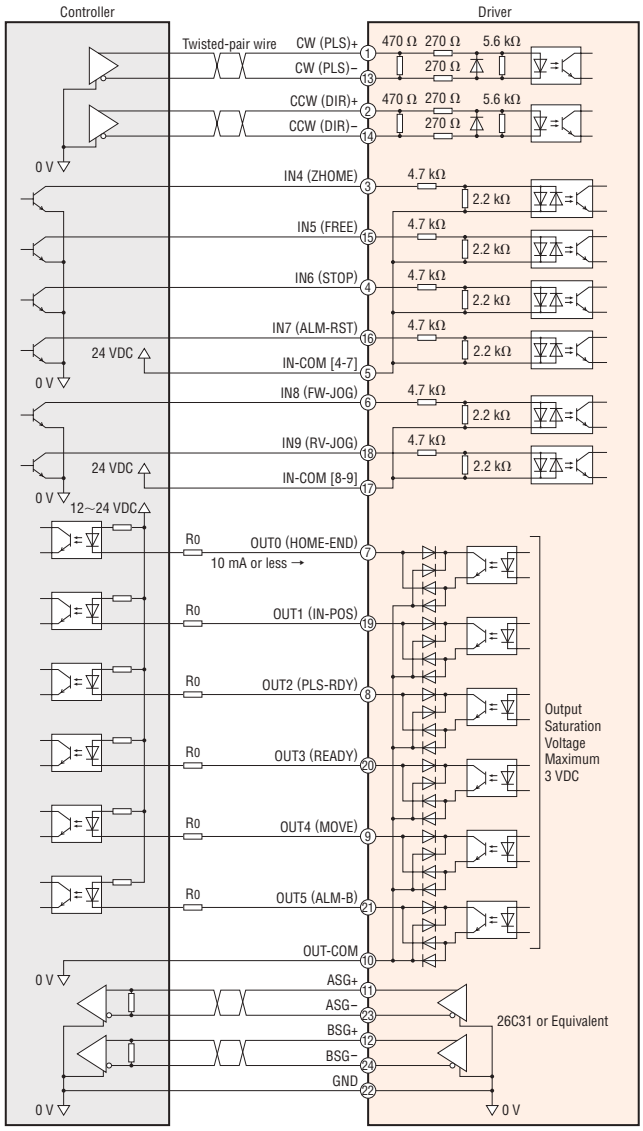

Note

- Use 24 VDC for the input signals.
- Use 12~24 VDC, 10 mA or less for the output signals. When the current value exceeds 10 mA, connect the external resistor R_0 to reduce the current to 10 mA or below.
- Provide a distance of 200 mm or longer between the signal lines and power lines (power supply lines, motor lines).
  Do not run the signal lines in the same piping as power lines or bundle them with power lines.
- If noise generated by the motor cable or power supply cable causes a problem with the specific wiring or layout, shield the cable or use ferrite cores.

When the pulse input is the open collector

•When the pulse input signal is 5 VDC

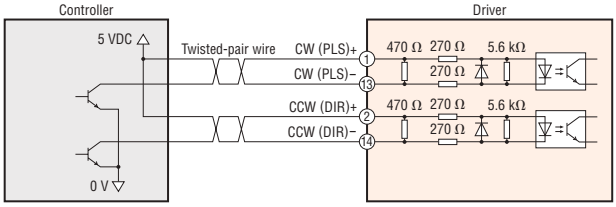

•When the pulse input signal is 24 VDC

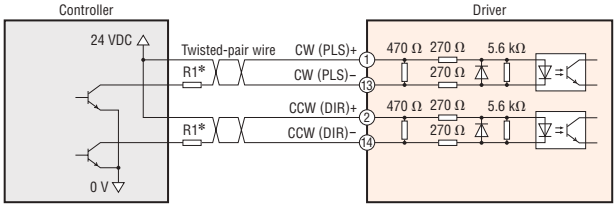

✻R_1: 1.2 kΩ~2.2 kΩ, 0.5 W or more

Note

- Use 5~24 VDC for the CW (PLS) and CCW (DIR) inputs.
  When using at 24 VDC, connect external resistor R_1 (1.2 kΩ~2.2 kΩ, 0.5 W or more).
- When using at 5 VDC, do not connect any external resistors, but directly connect a pulse input signal.

•Connection Diagram for Connection with Current Source Output Circuit

When the pulse input is the line driver

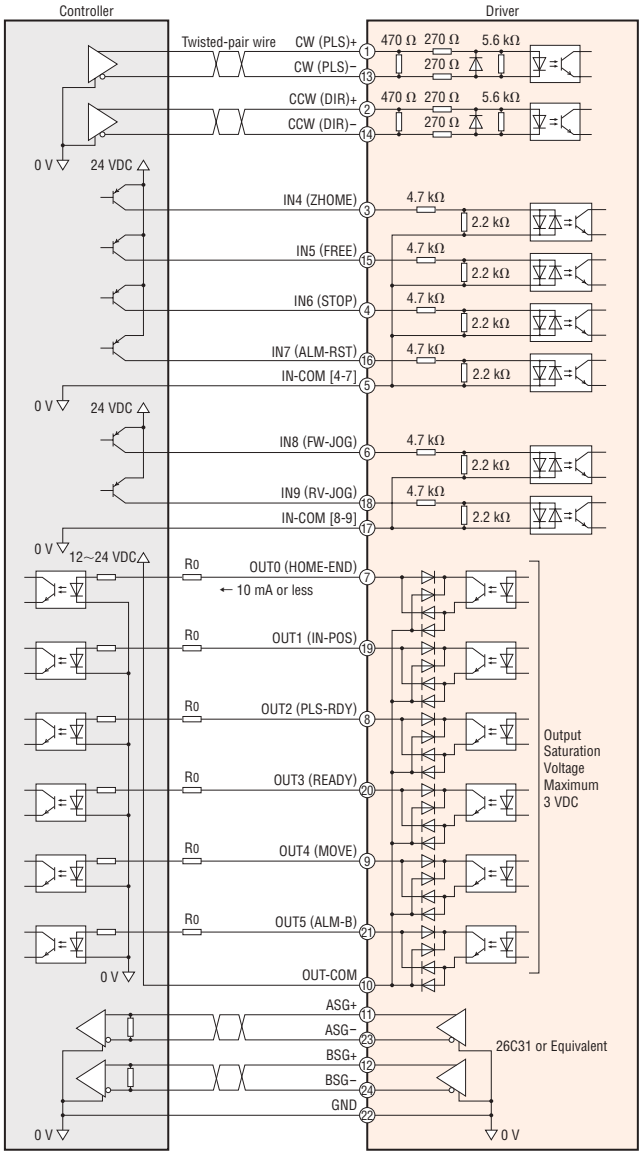

Note

- Use 24 VDC for the input signals.
- Use 12~24 VDC, 10 mA or less for the output signals. When the current value exceeds 10 mA, connect the external resistor R_0 to reduce the current to 10 mA or below.
- Provide a distance of 200 mm or longer between the signal lines and power lines (power supply lines, motor lines).
  Do not run the signal lines in the same piping as power lines or bundle them with power lines.
- If noise generated by the motor cable or power supply cable causes a problem with the specific wiring or layout, shield the cable or use ferrite cores.

When the pulse input is the open collector

•When the pulse input signal is 5 VDC

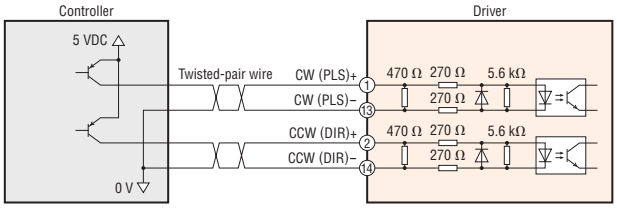

•When the pulse input signal is 24 VDC

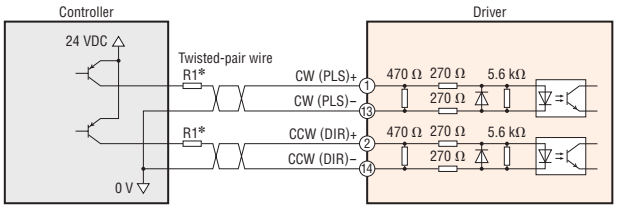

✻R_1: 1.2 kΩ~2.2 kΩ, 0.5 W or more

Note

- Use 5~24 VDC for the CW (PLS) and CCW (DIR) inputs.
  When using at 24 VDC, connect external resistor R_1 (1.2 kΩ~2.2 kΩ, 0.5 W or more).
- When using at 5 VDC, do not connect any external resistors, but directly connect a pulse input signal.

AZ Series Multi-Axis Drivers
DC Power Supply Input

MECHATROLINK-Ⅲ Compatible
EtherCAT Drive Profile Compatible

The multi-axis drivers can be connected to DC power supply motors of our **AZ** Series and to the motorized actuators equipped with motors.
We provide the multi-axis drivers that can support MECHATROLINK-Ⅲ, or EtherCAT Drive Profile.
No. of axes: 2, 3, or 4

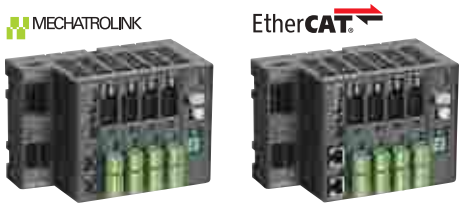

Features

Multi-axis driver (up to 4 axes) that reduces space and cost

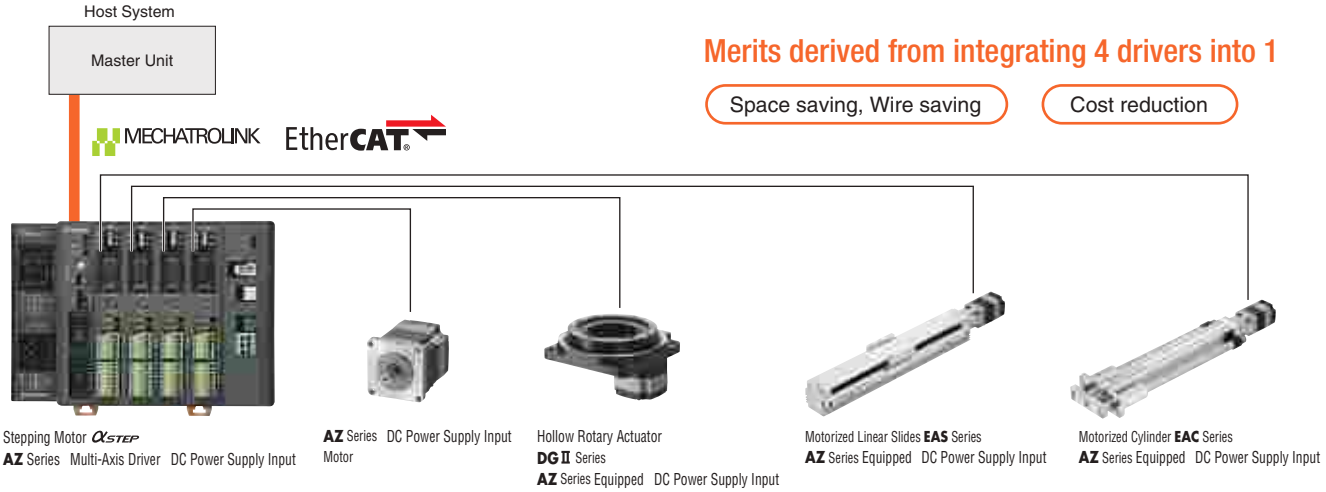

● The above motors and motorized actuators connected to the stepping motor are representative examples.

ESI File

We provide an ESI file to allow you to use EtherCAT-compatible products more easily.
The ESI file can be downloaded from the Oriental Motor website.
Contact OMRON Corporation for connection with the PLCs made by the company.
An EtherCAT connection guide is available.

Applicable Product Series

The **AZ** Series multi-axis driver DC power supply input can be used in combination with the motorized actuators listed below.

- Compact linear actuators **DRS2** Series **AZ** Series equipped
- Hollow rotary actuators **DG**Ⅱ Series **AZ** Series equipped DC power supply input
- Motorized linear slides **EAS** Series **AZ** Series equipped DC power supply input
- Motorized linear slides **EZS** Series **AZ** Series equipped DC power supply input
- Motorized cylinders **EAC** Series **AZ** Series equipped DC power supply input

● For the details of the motors and motorized actuators that can be combined, refer to the Oriental Motor website or the catalog of each Series.

Scan me

System Configuration

When supporting EtherCAT Drive Profile

This is a sample system configuration showing a combination with standard type **AZ** Series DC power supply input with electromagnetic brake.

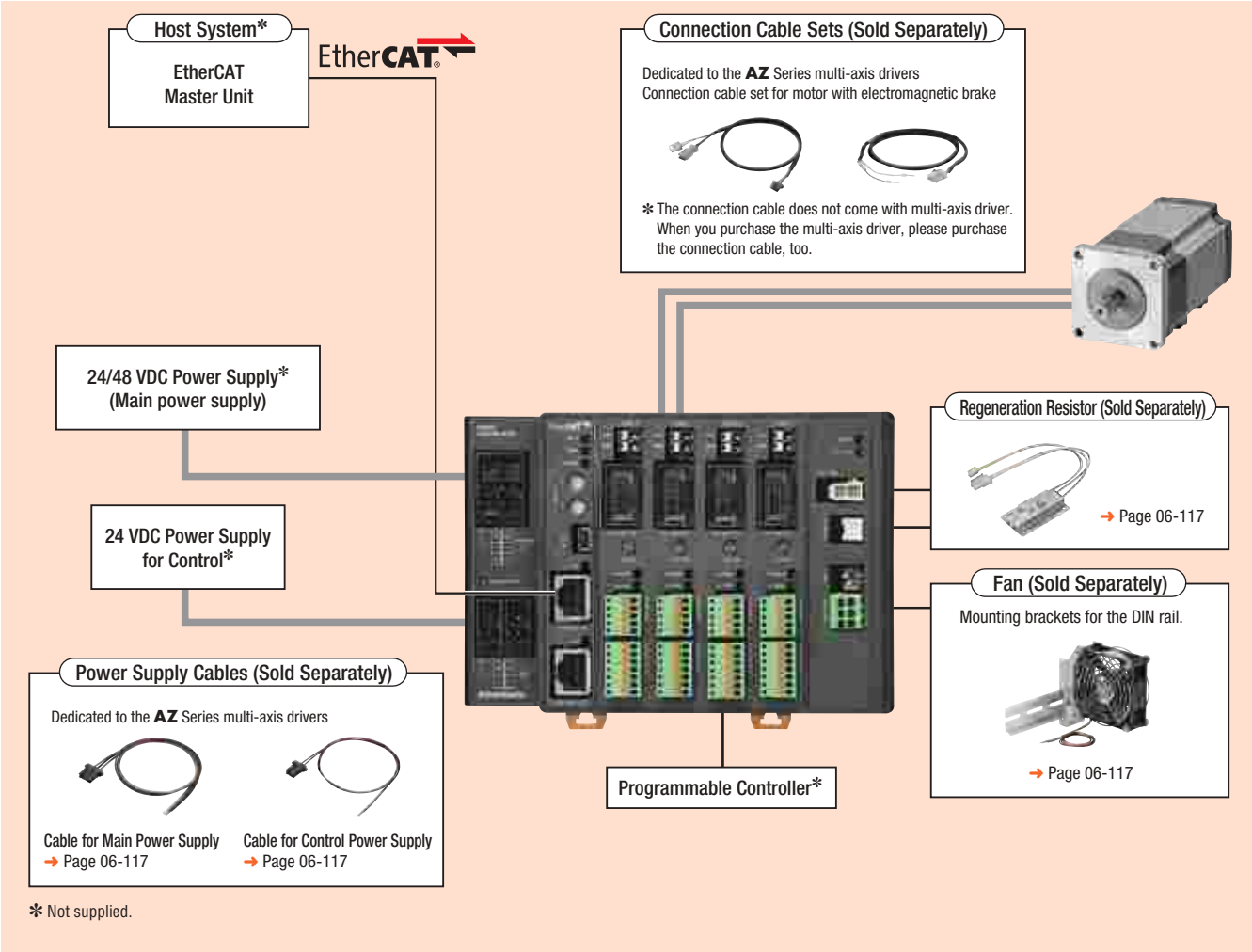

* Not supplied.

System Configuration Example

AZ Series				Sold Separately			
Motor	Driver	Connection Cable Sets	+	Cable for Main Power Supply	Cable for Control Power Supply	Regeneration Resistor	Fan
AZM66MK	**AZD4A-KED**	**CC030VZFBA**		**LC03D06A**	**LC02D06A**	**RGC40**	**V-MD825B24L**
SGD625	SGD1,600	SGD111		SGD19	SGD16	SGD56	SGD64

- The system configuration shown above is an example. Other combinations are available.

Note

- The motor cable and electromagnetic brake cable from the motor cannot be directly connected to a driver. To connect the motor to the driver, use a connection cable.

Product Number Code

Multi-Axis Driver

AZD 4A - K ED

① ② ③ ④

①	Driver Type	**AZD**: **AZ** Series Driver
②	No. of Axes	**2A**: 2 Axes **3A**: 3 Axes **4A**: 4 Axes
③	Power Supply Input	**K**: 24 VDC/48 VDC
④	Network Type	**M3**: MECHATROLINK-Ⅲ **ED**: EtherCAT Drive Profile

Dedicated to the **AZ** Series Multi-Axis Drivers Connection Cable Sets/Flexible Connection Cable Sets

◇Connection Cable for Motor

CC 050 V Z □ F A

① ② ③ ④ ⑤ ⑥ ⑧

◇Connection Cable Set for Motor with Electromagnetic Brake

CC 050 V Z F B A

① ② ③ ④ ⑥ ⑦ ⑧

①		**CC**: Cable
②	Length	**005**: 0.5 m **010**: 1 m **015**: 1.5 m **020**: 2 m **025**: 2.5 m **030**: 3 m **040**: 4 m **050**: 5 m **070**: 7 m **100**: 10 m **150**: 15 m **200**: 20 m
③	Reference Number	
④	Applied Model	**Z**: For **AZ** Series
⑤	Reference Number	Blank: For frame size 42 mm (40 mm for the **HPG** Geared Type), 60 mm **2**: For frame size 20 mm, 28 mm (30 mm for the harmonic Geared Type)
⑥	Cable Type	**F**: Connection Cable Set **R**: Flexible Connection Cable Set
⑦	Description	**B**: For the product with Electromagnetic Brakes
⑧	Driver Type	**A**: For Multi-Axis Drivers

Product Line

Multi-Axis Drivers

◇MECHATROLINK-Ⅲ Compatible

Product Name	No. of Axes	List Price
AZD2A-KM3	2 axes	SGD1,000
AZD3A-KM3	3 axes	SGD1,325
AZD4A-KM3	4 axes	SGD1,600

◇EtherCAT Drive Profile Compatible

Product Name	No. of Axes	List Price
AZD2A-KED	2 axes	SGD1,000
AZD3A-KED	3 axes	SGD1,325
AZD4A-KED	4 axes	SGD1,600

●Connection Cable Sets/Flexible Connection Cable Sets dedicated to the **AZ** Series Multi-Axis Drivers

◇Connection Cable for Motor

Length L (m)	For Frame Size 20 mm, 28 mm				For Frame Size 42 mm, 60 mm			
	Connection Cable	List Price	Flexible Connection Cable	List Price	Connection Cable	List Price	Flexible Connection Cable	List Price
0.5	**CC005VZ2FA**	SGD71	**CC005VZ2RA**	SGD84	**CC005VZFA**	SGD71	**CC005VZRA**	SGD84
1	**CC010VZ2FA**	SGD71	**CC010VZ2RA**	SGD84	**CC010VZFA**	SGD71	**CC010VZRA**	SGD84
1.5	**CC015VZ2FA**	SGD76	**CC015VZ2RA**	SGD92	**CC015VZFA**	SGD76	**CC015VZRA**	SGD92
2	**CC020VZ2FA**	SGD81	**CC020VZ2RA**	SGD99	**CC020VZFA**	SGD81	**CC020VZRA**	SGD99
2.5	**CC025VZ2FA**	SGD86	**CC025VZ2RA**	SGD106	**CC025VZFA**	SGD86	**CC025VZRA**	SGD106
3	**CC030VZ2FA**	SGD91	**CC030VZ2RA**	SGD111	**CC030VZFA**	SGD91	**CC030VZRA**	SGD111
4	**CC040VZ2FA**	SGD101	**CC040VZ2RA**	SGD126	**CC040VZFA**	SGD101	**CC040VZRA**	SGD126
5	**CC050VZ2FA**	SGD110	**CC050VZ2RA**	SGD141	**CC050VZFA**	SGD110	**CC050VZRA**	SGD141
7	**CC070VZ2FA**	SGD136	**CC070VZ2RA**	SGD180	**CC070VZFA**	SGD136	**CC070VZRA**	SGD180
10	**CC100VZ2FA**	SGD176	**CC100VZ2RA**	SGD236	**CC100VZFA**	SGD176	**CC100VZRA**	SGD236
15	**CC150VZ2FA**	SGD244	**CC150VZ2RA**	SGD333	**CC150VZFA**	SGD244	**CC150VZRA**	SGD333
20	**CC200VZ2FA**	SGD310	**CC200VZ2RA**	SGD426	**CC200VZFA**	SGD310	**CC200VZRA**	SGD426

◇Connection Cable Set for Motor with Electromagnetic Brake

Length L (m)	For Frame Size 42 mm, 60 mm			
	Connection Cable Set	List Price	Flexible Connection Cable Set	List Price
0.5	**CC005VZFBA**	SGD86	**CC005VZRBA**	SGD114
1	**CC010VZFBA**	SGD86	**CC010VZRBA**	SGD114
1.5	**CC015VZFBA**	SGD93	**CC015VZRBA**	SGD124
2	**CC020VZFBA**	SGD98	**CC020VZRBA**	SGD134
2.5	**CC025VZFBA**	SGD105	**CC025VZRBA**	SGD143
3	**CC030VZFBA**	SGD111	**CC030VZRBA**	SGD151
4	**CC040VZFBA**	SGD123	**CC040VZRBA**	SGD171
5	**CC050VZFBA**	SGD135	**CC050VZRBA**	SGD191
7	**CC070VZFBA**	SGD166	**CC070VZRBA**	SGD240
10	**CC100VZFBA**	SGD214	**CC100VZRBA**	SGD311
15	**CC150VZFBA**	SGD294	**CC150VZRBA**	SGD433
20	**CC200VZFBA**	SGD373	**CC200VZRBA**	SGD551

Cable for Motor

Cable for Electromagnetic Brake

Note

●As for the cables dedicated to multi-axis drivers, we provide only connection cables. You cannot use extension cables for the **AZ** Series for multi-axis drivers.

■Accessories

●Multi-Axis Drivers

Type and No. of Axes \ Accessories		Connector for CN1	Connector for CN3	Contact for CN1, CN2	Connector Cap for CN4A, CN4B	Connector for CN9	Connector for CN10	Operating Manual
MECHATROLINK-Ⅲ Compatible EtherCAT Compatible	2 axes	2 pieces	2 pieces	10 pieces	2 pieces	2 pieces	2 pieces	1 set
	3 axes	2 pieces	2 pieces	10 pieces	2 pieces	3 pieces	3 pieces	1 set
	4 axes	2 pieces	2 pieces	10 pieces	2 pieces	4 pieces	4 pieces	1 set

■Specifications CE cULus*

●Power Supply Input

For main power supply: 24 VDC/48 VDC ±10%　7.0 A　(Maximum 7.0 A　Average 4.0 A or less during use)

For control power supply: 24 VDC ±10%　1.5 A　(For motors with electromagnetic brake, use power supply, 24 VDC ±5%)

(For motors with electromagnetic brake (when using a 20 cm connection cable), use power supply, 24 VDC ±4%)

●Communication Specifications

◇MECHATROLINK-Ⅲ Specifications

Items	Description
Baud Rate	100 Mbps
Transmission Period	0.5 ms/1 ms/2 ms/4 ms
Station Address	03 h～EF h (Initial value: 03 h)
Transmission Bytes	32/48 bytes (Initial value: 48 bytes)
Profile	Standard stepping motor drive profile Standard servo profile

◇EtherCAT Specifications

Items	Description
Baud Rate	100 Mbps
Communication Period	0.5 ms/1 ms/2 ms/3 ms/4 ms/5 ms/6 ms/7 ms/8 ms
Node Address	0～255 (00 h～FF h, Initial value: 00 h)
Communication Protocol	Proprietary protocol for EtherCAT (CoE) CiA402 drive profile

*Compatible with EtherCAT drive profile only.

General Specifications

Items	Description
Degree of Protection	IP10
Operating Environment	Ambient temperature: 0～+50˚C (Non-freezing) Humidity: 85% or less (Non-condensing) Altitude: Up to 1000 m above sea level Atmosphere: No corrosive gases or dust. The product should not be exposed to water or oil.
Storage Condition Transportation Environment	Ambient temperature: −25～+70˚C (Non-freezing) Humidity: 85% or less (Non-condensing) Altitude: Up to 3000 m above sea level Atmosphere: No corrosive gases or dust. The product should not be exposed to water or oil.
Insulation Resistance	When a 500 VDC megger is applied to the location below, the resistance to be measured is 100 MΩ or more. · FG terminal – Power supply terminal
Dielectric Strength Voltage	No abnormality is found with the following application for 1 minute: · MECHATROLINK-Ⅲ Compatible: FG terminal – Power supply terminal 500 VAC 50/60 Hz Leakage current 15 mA or less · EtherCAT Compatible: FG terminal – Power supply terminal 1 kVAC 50/60 Hz Leakage current 10 mA or less

Note

- When measuring insulation resistance or performing a dielectric strength voltage test, be sure to disconnect the motor from the driver beforehand. In addition, make sure that the ABZO sensor of the motor is exempt from the above measurement and test.

Dimensions (Unit: mm)

Multi-Axis Drivers

2D & 3D CAD

Type / No. of Axes	MECHATROLINK-Ⅲ Compatible		EtherCAT Compatible		Mass
	Product Name	2D CAD	Product Name	2D CAD	kg
2 Axes	**AZD2A-KM3**	B1200	**AZD2A-KED**	B1206	0.39
3 Axes	**AZD3A-KM3**	B1201	**AZD3A-KED**	B1207	0.42
4 Axes	**AZD4A-KM3**	B1202	**AZD4A-KED**	B1208	0.45

- The size is commonly applied to 2, 3, and 4 axis drivers.

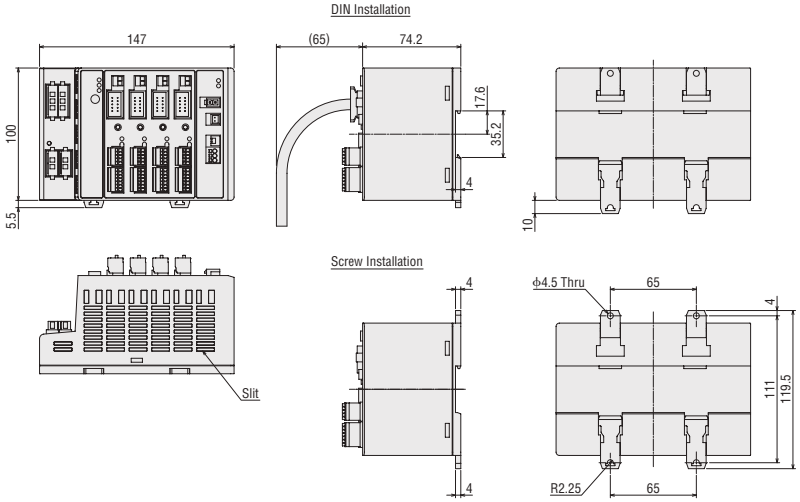

- Accessories

Connector for main power supply: F32FSS-03V-KX (JST)
Connector for control power supply: F32FSS-02V-KX (JST)
Contact for main power supply connectors and control power supply connectors: LF3F-41GF-P2.0 (JST)
Input signal connector: FK-MC 0,5/ 5-ST-2,5 (PHOENIX CONTACT)
Output signal connector: FK-MC 0,5/ 7-ST-2,5 (PHOENIX CONTACT)

Connection Cable Sets, Flexible Connection Cable Sets

◇Cable for Motor

•For frame size 20 mm, 28 mm

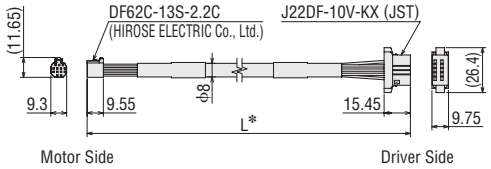

•For frame size 42 mm, 60 mm

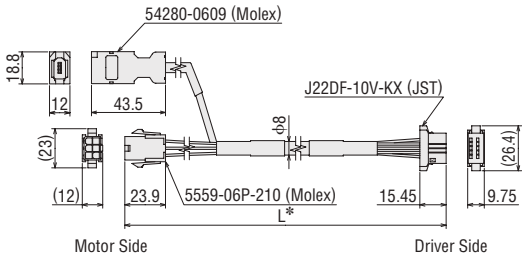

◇Cable for Electromagnetic Brake

•For frame size 42 mm, 60 mm

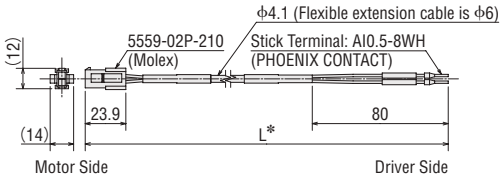

✻"L" in the above dimensions is replaced by any Length L (m) in " ■ Product Line" on page 06-115.

Accessories Dedicated to Multi-Axis Drivers

Power Supply Cables (Sold separately)

These lead wires, equipped with a connector, are dedicated to the **AZ** Series multi-axis drivers. The wires easily allow connection with main power supply and control power supply.

◇Product Line

Product Name	Type	List Price
LC03D06A	For main power supply	SGD19
LC02D06A	For control power supply	SGD16

LC03D06A **LC02D06A**

◇Dimensions (Unit: mm)

Cable for main power supply
LC03D06A

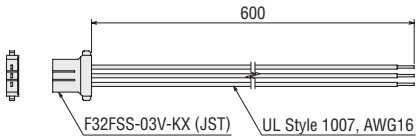

Cable for control power supply
LC02D06A

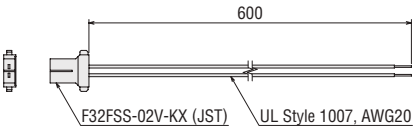

Regeneration Resistor

During vertical drive (gravitational operation) or sudden start/stop in high inertia, an external force causes the motor to rotate and function as a power generator. When the regenerative power exceeds the driver's regenerative power absorption capacity, it may cause damage to the motor. In such a case, the regeneration resistor is connected to the driver to convert regenerative energy into thermal energy for dissipation.
When 24 VDC is used for a multi-axis driver, alarms tend to be easily generated. Therefore, we recommend to use a regeneration resistor.

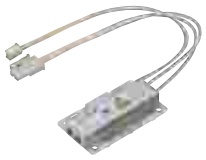

◇Product Line

Product Name	List Price
RGC40	SGD56

◇Specifications

Items	Description
Allowable Power Consumption	Continuous regenerative power: 40 W* Instantaneous regenerative power: 400 W
Resistance Value	15 Ω
Thermostat Operating Temperature	Operation: Opens at 95±5°C Reset: Closes at 65±15°C (Normally closed)
Thermostat Electrical Rating	250 VAC, 0.5 A (Min. current 1.5 VDC, 1 mA)

*Install the regeneration resistor in the location that has the same heat radiation capability as the heat sink (Material: Aluminum 180×150 mm Thickness 2 mm).

◇Dimensions (Unit: mm)

Mass: 0.03 kg 2D CAD B1209 3D CAD

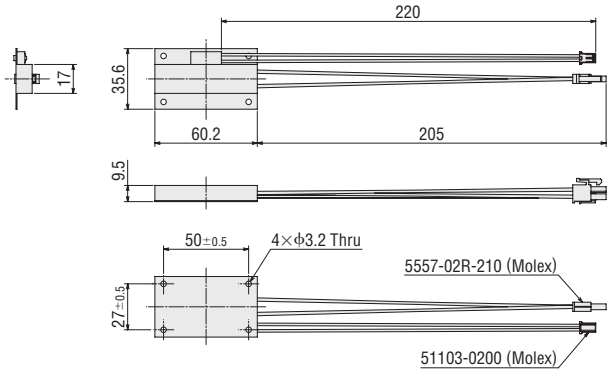

Fan

DC propeller fan for circulating air in the control panel or cooling a certain part.

◇Product Line

Product Name	Type	List Price
V-MD825B24L	With DIN rail mounting bracket	SGD64

Accessories (Sold Separately)

Extension Cable Sets, Flexible Extension Cable Sets

For the **AZ** Series, we provide sets of connection cables and flexible extension cables that can be connected to sets of connection cables for extension.
For standard motors, sets of motor cables and encoder cables are provided. For motors with an electromagnetic brake, sets of motor cables, encoder cables, and electromagnetic brake cables are provided.
Use a flexible connection cable set or flexible extension cable set if the cable will be bent repeatedly.

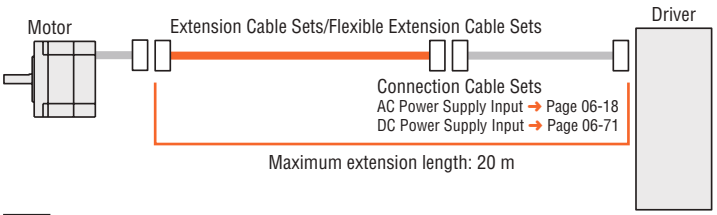

Note

- The motor cable and electromagnetic brake cable from the motor cannot be directly connected to a driver. To connect the motor to the driver, use a connection cable. The maximum length of the cable extension is 20 m.

AC Power Supply Input

Extension Cable Sets, Flexible Extension Cable Sets

Product Line

Extension Cable Sets

◇For Standard Motors

Cable for Motor

Cable for Encoder

Product Name	Length L (m)	List Price
CC010VZFT	1	SGD71
CC020VZFT	2	SGD81
CC030VZFT	3	SGD91
CC050VZFT	5	SGD110
CC070VZFT	7	SGD136
CC100VZFT	10	SGD176
CC150VZFT	15	SGD244

◇For Motors with Electromagnetic Brake

Cable for Motor

Cable for Encoder

Cable for Electromagnetic Brake

Product Name	Length L (m)	List Price
CC010VZFBT	1	SGD86
CC020VZFBT	2	SGD98
CC030VZFBT	3	SGD111
CC050VZFBT	5	SGD135
CC070VZFBT	7	SGD166
CC100VZFBT	10	SGD214
CC150VZFBT	15	SGD294

Flexible Extension Cable Sets

◇For Standard Motors

Cable for Motor

Cable for Encoder

Product Name	Length L (m)	List Price
CC010VZRT	1	SGD84
CC020VZRT	2	SGD99
CC030VZRT	3	SGD111
CC050VZRT	5	SGD141
CC070VZRT	7	SGD180
CC100VZRT	10	SGD236
CC150VZRT	15	SGD333

◇For Motors with Electromagnetic Brake

Cable for Motor

Cable for Encoder

Cable for Electromagnetic Brake

Product Name	Length L (m)	List Price
CC010VZRBT	1	SGD114
CC020VZRBT	2	SGD134
CC030VZRBT	3	SGD151
CC050VZRBT	5	SGD191
CC070VZRBT	7	SGD240
CC100VZRBT	10	SGD311
CC150VZRBT	15	SGD433

Dimensions (Unit: mm)

Cable for Motor

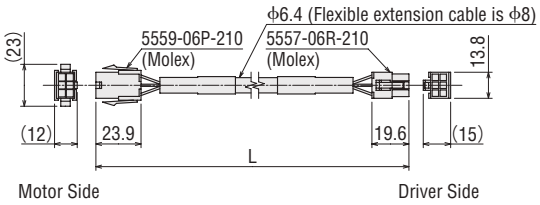

Cable for Encoder

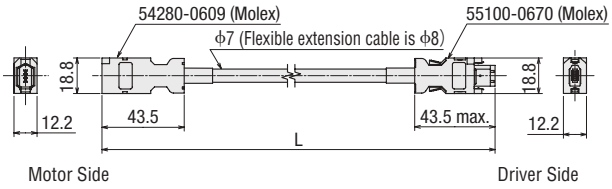

Cable for Electromagnetic Brake

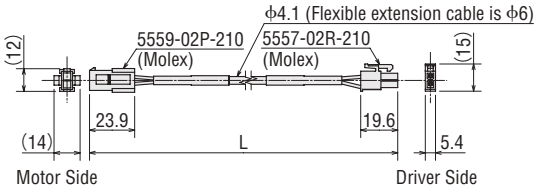

DC Power Supply Input

Extension Cable Sets, Flexible Extension Cable Sets

Product Line

[For **AZM14**, **AZM15**, **AZM24**, **AZM26**]

Extension Cables

◇For Standard Motors

Product Name	Length L (m)	List Price
CC010VZ2FT	1	SGD71
CC020VZ2FT	2	SGD81
CC030VZ2FT	3	SGD91
CC050VZ2FT	5	SGD110
CC070VZ2FT	7	SGD136
CC100VZ2FT	10	SGD176
CC150VZ2FT	15	SGD244

Flexible Extension Cables

◇For Standard Motors

Product Name	Length L (m)	List Price
CC010VZ2RT	1	SGD84
CC020VZ2RT	2	SGD99
CC030VZ2RT	3	SGD111
CC050VZ2RT	5	SGD141
CC070VZ2RT	7	SGD180
CC100VZ2RT	10	SGD236
CC150VZ2RT	15	SGD333

[For **AZM46**, **AZM48**, **AZM66**, **AZM69**]

Extension Cable Sets

◇For Standard Motors

Cable for Motor

Cable for Encoder

Product Name	Length L (m)	List Price
CC010VZFT	1	SGD71
CC020VZFT	2	SGD81
CC030VZFT	3	SGD91
CC050VZFT	5	SGD110
CC070VZFT	7	SGD136
CC100VZFT	10	SGD176
CC150VZFT	15	SGD244

◇For Motors with Electromagnetic Brake

Cable for Motor

Cable for Encoder

Cable for Electromagnetic Brake

Product Name	Length L (m)	List Price
CC010VZFBT	1	SGD86
CC020VZFBT	2	SGD98
CC030VZFBT	3	SGD111
CC050VZFBT	5	SGD135
CC070VZFBT	7	SGD166
CC100VZFBT	10	SGD214
CC150VZFBT	15	SGD294

Flexible Extension Cable Sets

◇For Standard Motors

Cable for Motor

Cable for Encoder

Product Name	Length L (m)	List Price
CC010VZRT	1	SGD84
CC020VZRT	2	SGD99
CC030VZRT	3	SGD111
CC050VZRT	5	SGD141
CC070VZRT	7	SGD180
CC100VZRT	10	SGD236
CC150VZRT	15	SGD333

◇For Motors with Electromagnetic Brake

Cable for Motor

Cable for Encoder

Cable for Electromagnetic Brake

Product Name	Length L (m)	List Price
CC010VZRBT	1	SGD114
CC020VZRBT	2	SGD134
CC030VZRBT	3	SGD151
CC050VZRBT	5	SGD191
CC070VZRBT	7	SGD240
CC100VZRBT	10	SGD311
CC150VZRBT	15	SGD433

Dimensions (Unit: mm)

[For **AZM14**, **AZM15**, **AZM24**, **AZM26**]

Cable for Motor

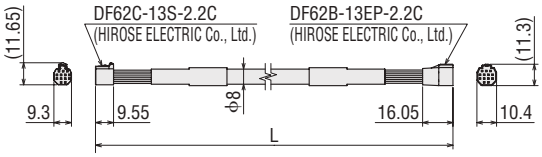

[For **AZM46**, **AZM48**, **AZM66**, **AZM69**]

Cable for Motor

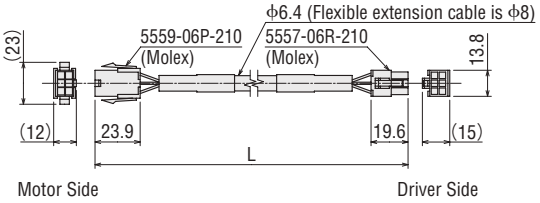

Cable for Encoder

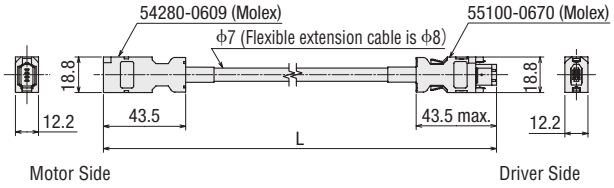

Cable for Electromagnetic Brake

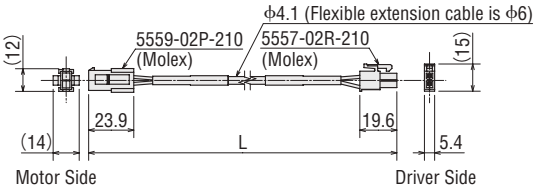

Notes on Use of Cables

→Refer to page 06-55.

Support Software **MEXE02**

In addition to operating data and various parameter settings with a computer, you can perform teaching and monitor I/O and operating speed waveform with support software.
Support software can be downloaded from the Oriental Motor website.
Oriental Motor also provides media.
Visit our website, or contact the nearest Oriental Motor sales office.

Operating Environment

Computer

Recommended CPU*1	Intel Core processor 2 GHz or faster (OS must be supported)
Display	Video adapter and monitor with a minimum resolution of XGA (1024 × 768)
Recommended Memory*1	32 bit (x86) edition: 1 GB or more 64 bit (x64) edition: 2 GB or more
Hard Disk*2	Free disk space of at least 60 MB
USB Port	USB2.0 1 port

*1 The system requirements for the OS must be met.
*2 **MEXE02** requires Microsoft.NET Framework 4 Client Profile. If it is not installed, it will be installed automatically. An additional 1.5 GB of free space may be required for 64-bit (x64) edition OS and 600 MB for 32-bit (x86) edition OS.

- Windows and Windows Vista are registered trademarks of Microsoft Corporation in the United States and other countries.
- Intel and Core are registered trademarks or trademarks of Intel Corporation in the United States and other countries.
- For the latest information of operating environment, refer to the Oriental Motor website.

Note

- Depending on your system environment, the required memory and hard disk may vary.
- When using media to install the support software, you need to prepare a drive for the media.

Operating System (OS)

The 32 bit (x86) editions and 64 bit (x64) editions are supported.

- Microsoft Windows XP Service Pack 3*
- Microsoft Windows Vista Service Pack 2
- Microsoft Windows 7 Service Pack 1
- Microsoft Windows 8
- Microsoft Windows 8.1
- Microsoft Windows 10

*For the 64-bit (x64) version, Service Pack 2 is used.

Computer and Driver Connection

Use a USB cable with the following specifications.

Specifications	USB2.0 (Full speed)
Cable	Length: 3 m or less Configuration: A-mini-B

RS-485 Communication Cables

This cable is used to connect drivers when the multi-axis operation of built-in controller types or pulse input types with RS-485 communication is performed.
It also connects the network converter to the driver.

Product Line

Product Name	Applicable Drivers	Length L (m)	List Price
CC001-RS4	DC Power Supply Input Driver	0.1	SGD32
CC002-RS4	AC Power Supply Input Driver DC Power Supply Input Driver	0.25	SGD37

Dimensions (Unit: mm)

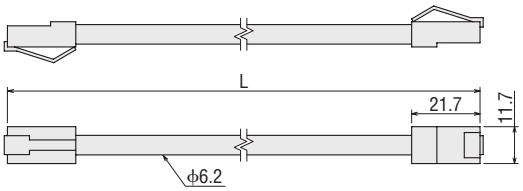

Connector – Terminal Block Conversion Unit

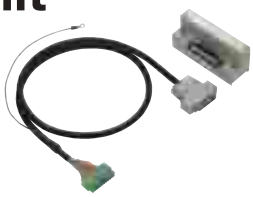

A conversion unit that connects a driver to a programmable controller using a terminal block.
- Includes a signal name plate for easy, one-glance identification of driver signal names
- Enables both DIN rail installation and screw installation
- Employs a double shield cable

Product Line

Product Name	Length L (m)	List Price
CC24T05E	0.5	SGD213
CC24T10E	1	SGD219

Dimensions (Unit: mm)

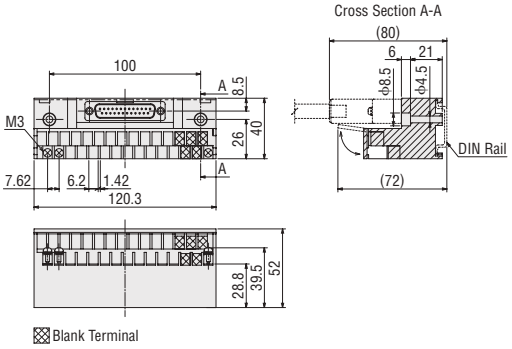

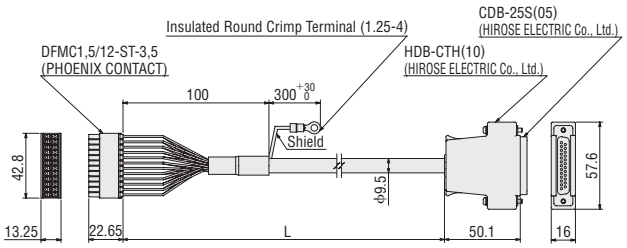

General-Purpose Cables for I/O Signals

General-purpose multi-core cables provide convenient connection between a driver and programmable controller.
- Employs a double shield cable
- Core wire AWG24

Cables with lead wires on one side

Cables with lead wires on both sides

Cables with Lead Wires on One Side

Since cables on the driver side are connected to the connector, labor and time can be saved.

Product Line

Number of Lead Line Cores	Length L		
	0.5 m	1 m	2 m
24	**CC24D005C-1**	**CC24D010C-1**	**CC24D020C-1**
	SGD88	SGD94	SGD106

Dimensions (Unit: mm)

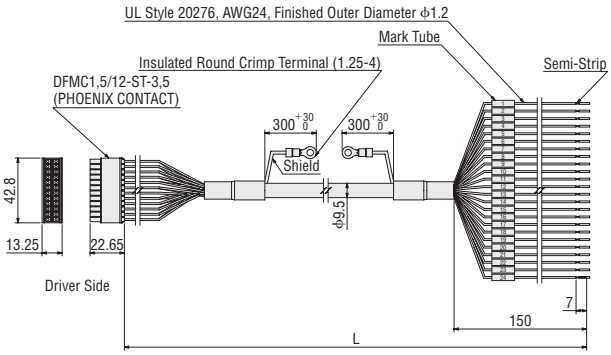

Cables with Lead Wires on Both Sides

In accordance with the number of I/O signals to be connected, select the optimum cable.

Product Line

Number of Lead Line Cores	Length L			
	0.5 m	1 m	1.5 m	2 m
6	**CC06D005B-1**	**CC06D010B-1**	**CC06D015B-1**	**CC06D020B-1**
	SGD17	SGD19	SGD21	SGD23
10	**CC10D005B-1**	**CC10D010B-1**	**CC10D015B-1**	**CC10D020B-1**
	SGD19	SGD21	SGD24	SGD26
12	**CC12D005B-1**	**CC12D010B-1**	**CC12D015B-1**	**CC12D020B-1**
	SGD21	SGD24	SGD27	SGD30
16	**CC16D005B-1**	**CC16D010B-1**	**CC16D015B-1**	**CC16D020B-1**
	SGD22	SGD25	SGD28	SGD31

Dimensions (Unit: mm)

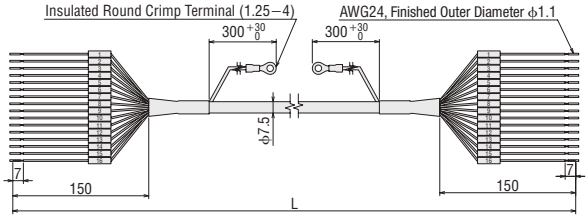

The dimensions shows a 16-core cable.

MCV Couplings

This one-piece coupling is made with anti-vibration rubber molded between aluminum alloy hubs.

Product Line

Product Name	List Price
MCV15□	SGD94
MCV19□	SGD90
MCV25□	SGD100
MCV30□	SGD105

● A number indicating the coupling inner diameter is entered where the box □ is located within the product name.

Product Number Code

MCV 25 10 12

① ② ③ ④

①	**MCV** Coupling
②	Outer Diameter of Coupling
③	Inner Diameter d1 (Smaller inner diameter) (**06A** represents ϕ6.35 mm)
④	Inner Diameter d2 (Larger inner diameter) (**06A** represents ϕ6.35 mm)

● For inner diameter d1, the smaller of the motor shaft diameter or the driven shaft diameter is entered.
For inner diameter d2, the larger of the motor shaft diameter or the driven shaft diameter is entered.

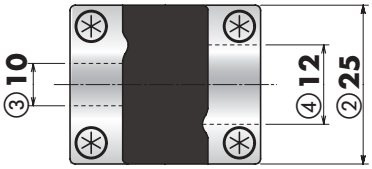

Coupling Selection Table

● Select the coupling based on the criteria below.

- The output torque of the motor is equal to or under the normal torque of the coupling.
- Motor shaft diameter.

Applicable Product			Coupling Type	Motor Shaft Diameter mm		Driven Shaft Diameter mm									
Type	Frame Size	Product Name				**03**	**04**	**05**	**06**	**06A**	**08**	**10**	**12**	**14**	**15**
						ϕ3	ϕ4	ϕ5	ϕ6	ϕ6.35	ϕ8	ϕ10	ϕ12	ϕ14	ϕ15
Standard Type	20 mm	**AZM14**, **AZM15**	**MCV15**	**04**	ϕ4		●	●	●						
	28 mm	**AZM24**, **AZM26**		**05**	ϕ5	●	●	●	●						
	42 mm	**AZM46**		**06**	ϕ6		●	●	●						
		AZM48	**MCV19**	**08**	ϕ8			●	●		●				
	60 mm	**AZM66**, **AZM69**	**MCV25**	**10**	ϕ10				●	●	●	●	●		
	85 mm	**AZM98**, **AZM911**	**MCV30**	**14**	ϕ14						●	●	●	●	●

● The product names of the applicable ones are described with text by which the product name can be identified.

MCS Couplings

This three-piece coupling adopts an aluminum alloy hub and a resin spider.

Product Line

Product Name	List Price
MCS20□	SGD58
MCS30□	SGD70
MCS40□	SGD107
MCS55□	SGD142
MCS65□	SGD226

- A number indicating the coupling inner diameter is entered where the box □ is located within the product name.

Product Number Code

MCS 30 10 12

① ② ③ ④

①	**MCS** Coupling
②	Outer Diameter of Coupling
③	Inner Diameter d1 (Smaller inner diameter) (**F04** represents ϕ6.35 mm)
④	Inner Diameter d2 (Larger inner diameter) (**F04** represents ϕ6.35 mm)

- For inner diameter d1, the smaller of the motor shaft diameter or the driven shaft diameter is entered.
  For inner diameter d2, the larger of the motor shaft diameter or the driven shaft diameter is entered.

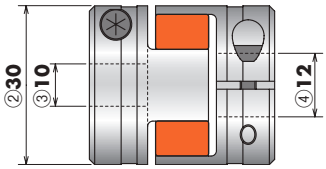

Coupling Selection Table

- Select the coupling based on the criteria below.
  - The output torque of the motor is equal to or under the normal torque of the coupling.
  - Motor shaft diameter.
- When using a parallel key, select the coupling that matches the parallel key.

Applicable Product			Gear Ratio	Coupling Type	Motor Shaft Diameter mm		Driven Shaft Diameter mm													
Type	Frame Size	Product Name					05	06	F04	08	10	12	14	15	16	18	20	22	24	25
							ϕ5	ϕ6	ϕ6.35	ϕ8	ϕ10	ϕ12	ϕ14	ϕ15	ϕ16	ϕ18	ϕ20	ϕ22	ϕ24	ϕ25
TS Geared Type	42 mm	**AZM46-TS**□	**3.6, 7.2**	**MCS20**	**06**	ϕ6	●	●	●	●	●									
			10, 20, 30	**MCS30**				●	●	●	●	●	●	●	●					
	60 mm	**AZM66-TS**□	**3.6, 7.2**	**MCS30**	**10**	ϕ10		●	●	●	●	●	●	●	●					
			10, 20, 30	**MCS40**						●	●	●	●	●	●	●	●			
	90 mm	**AZM98-TS**□	**3.6, 7.2, 10**	**MCS55**	**18**	ϕ18						●	●	●	●	●	●	●	●	
			20, 30	**MCS65**											●	●	●	●	●	●
FC Geared Type	42 mm	**AZM46-FC**□	**7.2, 10, 20, 30**	**MCS20**	**10**	ϕ10	●	●	●	●	●									
				MCS30								●	●	●	●					
	60 mm	**AZM66-FC**□		**MCS40**	**15**	ϕ15				●	●	●								
				MCS55								●	●			●				
PS Geared Type	28 mm	**AZM24-PS**□	**7.2, 10**	**MCS20**	**08**	ϕ8	●	●	●	●	●									
	42 mm	**AZM46-PS**□	**5**	**MCS20**	**10**	ϕ10	●	●	●	●	●									
			7.2, 10, 25, 36, 50	**MCS30**				●	●	●	●	●	●	●	●					
	60 mm	**AZM66-PS**□	**5, 7.2**	**MCS40**	**12**	ϕ12				●	●	●	●	●	●	●	●			
			10, 25, 36, 50	**MCS55**								●	●	●	●	●	●	●	●	
	90 mm	**AZM98-PS**□	**5, 7.2**	**MCS55**	**18**	ϕ18						●	●	●	●	●	●	●	●	
			10, 25, 36, 50	**MCS65**											●	●	●	●	●	●
HPG Geared Type	40 mm	**AZM46-HP**□	**5, 9**	**MCS30**	**10**	ϕ10		●	●	●	●	●	●	●	●					
	60 mm	**AZM66-HP**□	**5, 15**	**MCS55**	**16**	ϕ16						●	●			●				
	90 mm	**AZM98-HP**□	**5, 15**	**MCS65**	**25**	ϕ25										●	●			
Harmonic Geared Type	30 mm	**AZM24-HS**□	**50, 100**	**MCS30**	**08**	ϕ8		●	●	●	●	●	●	●	●					
	42 mm	**AZM46-HS**□	**50, 100**	**MCS40**	**10**	ϕ10				●	●	●	●	●	●	●	●			
	60 mm	**AZM66-HS**□	**50, 100**	**MCS55**	**15**	ϕ15						●	●			●				

- The product names of the applicable ones are described with text by which the product name can be identified.
- A number in the box □ in the product name indicates the gear ratio.

Motor Mounting Brackets

Mounting brackets are convenient for installation and securing a stepping motor and geared type stepping motor.
The mounting bracket base is built with holes large enough to allow for adjustments of belt tension after a motor is installed.

Product Line

For Standard Type

Material: Aluminum alloy (SPCC)*
Surface treatment: Painting (Electroless nickel plating)*

Product Name	List Price	Motor Frame Size	Applicable Product
PFB28A	SGD15	28 mm	**AZM24**, **AZM26**
PAF0P	SGD14	42 mm	**AZM46**, **AZM48**
PAL0P			
PAL2P-5		60 mm	**AZM66**, **AZM69**
PAL4P-5	SGD16	85 mm	**AZM98**, **AZM911**

*The specifications in the ( ) apply to **PFB28A**.
●These installation brackets can be perfectly fitted to the pilot of the stepping motors. (Excluding **PAL0P**)
●The motor installation screws are included.

For **TS** Geared Type

Material: Aluminum alloy
Surface treatment: Painting

Product Name	List Price	Motor Frame Size	Applicable Product
SOL0B	SGD25	42 mm	**AZM46**
SOL2M4	SGD30	60 mm	**AZM66**
SOL5M8	SGD38	90 mm	**AZM98**

For **PS** Geared Type

Material: SS400
Surface treatment: Electroless nickel plating

Product Name	List Price	Motor Frame Size	Applicable Product
PFA28G	SGD69	28 mm	**AZM24**
PFA42F	SGD75	42 mm	**AZM46**
PLA60G	SGD131	60 mm	**AZM66**
PLA90G	SGD156	90 mm	**AZM98**

●The motor installation screws are included.

For Harmonic Geared Type

Material: SS400
Surface treatment: Electroless nickel plating

Product Name	List Price	Motor Frame Size	Applicable Product
PFA42H	SGD75	42 mm	**AZM46**
PLA60H	SGD131	60 mm	**AZM66**
PLA90H	SGD156	90 mm	**AZM98**

●The motor installation screws are included.

Motor Installation Direction

Since the cable comes out perpendicular with the motor, install the cable in a way that it faces upward or sideward.

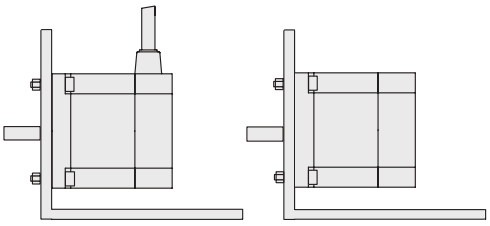

Cable Facing Up　　Cable Facing Sideways

Installation Methods of the Motor

1 PAL2P-5, SOL2M4 PAL4P-5, SOL5M8

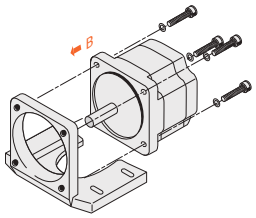

①Use the screws to secure the motor to the installation bracket.
②Install the motor from the direction shown by the arrow (B).

2 PAL0P, SOL0B

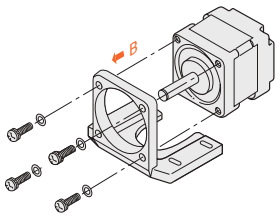

①Use the screws to secure the motor to the installation bracket.
②Install the motor from the direction shown by the arrow (B).

3 PAF0P, PFB28A PFA28G, PFA42F PFA42H

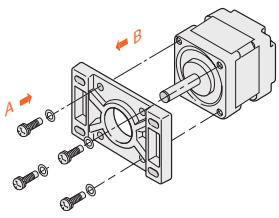

①Use the screws to secure the motor to the installation bracket.
②Install the motor from the direction shown by the arrow (A, B).

4 PLA60G, PLA60H PLA90G, PLA90H

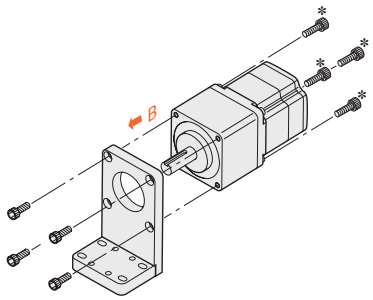

①Use the screws to secure the motor to the installation bracket.
②Install the motor from the direction shown by the arrow (B).
*For **PLA90H**, install the screws from (B) direction.

Dimensions (Unit: mm)

PFB28A

Mass: 25 g

2D CAD B645

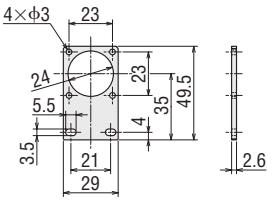

Installation screws: M2.5 Length 5 mm
4 pieces included

PAF0P

Mass: 30 g

2D CAD B140 3D CAD

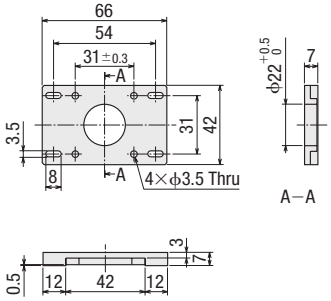

Installation screws: M3 Length 7 mm
4 pieces included

PAL0P

Mass: 35 g

2D CAD B139 3D CAD

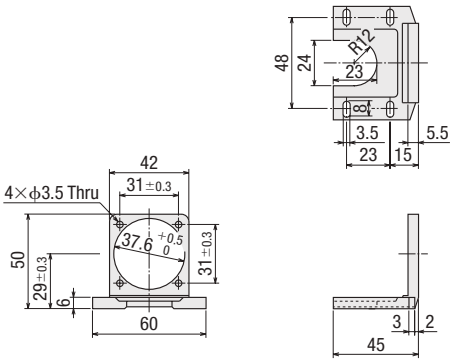

Installation screws: M3 Length 10 mm
4 pieces included

PAL2P-5

Mass: 110 g

2D CAD B143 3D CAD

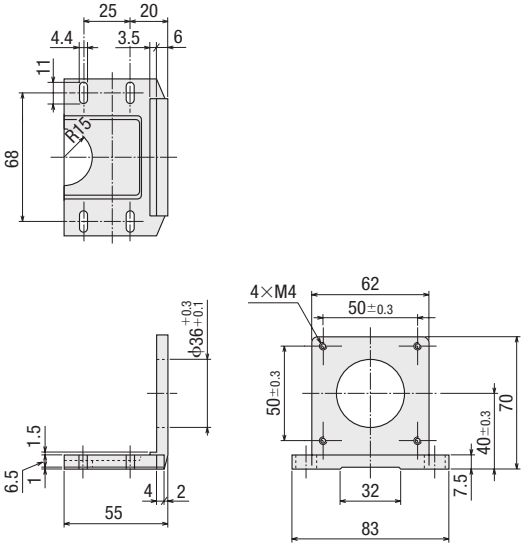

Installation screws: M4 Length 12 mm
4 pieces included

PAL4P-5

Mass: 250 g

2D CAD B145 3D CAD

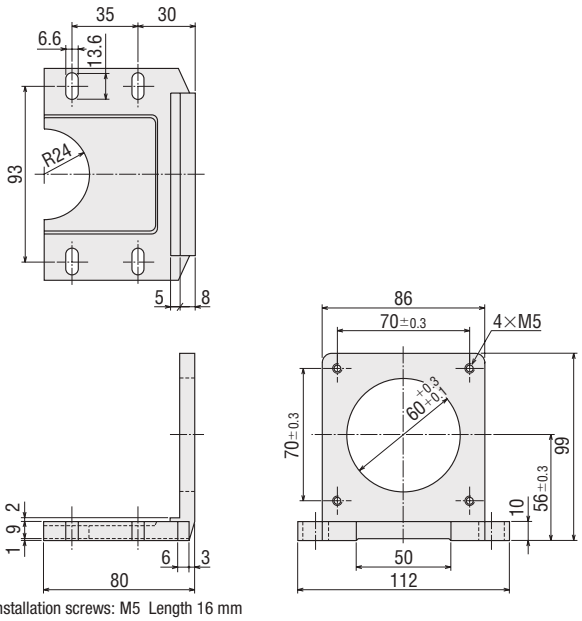

Installation screws: M5 Length 16 mm
4 pieces included

SOL0B

Mass: 85 g

2D CAD B267 3D CAD

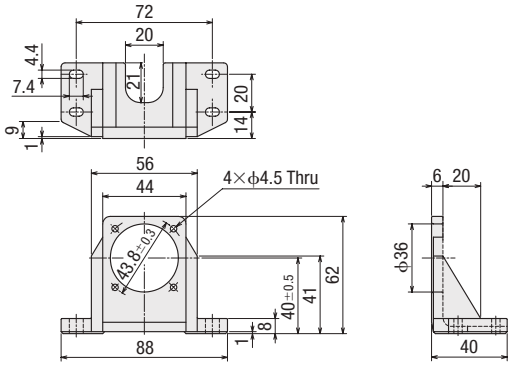

SOL2M4

Mass: 135 g

2D CAD A321 3D CAD

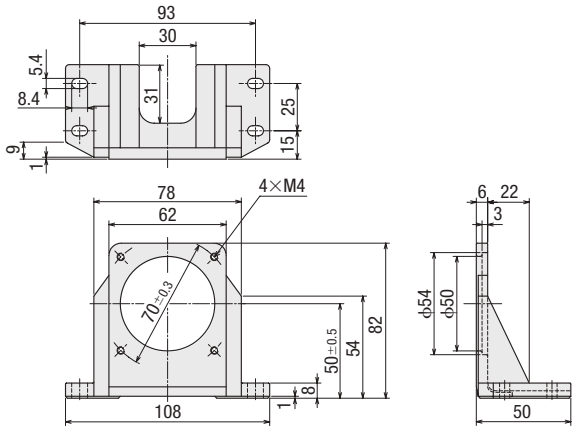

SOL5M8

Mass: 270 g

2D CAD A239 3D CAD

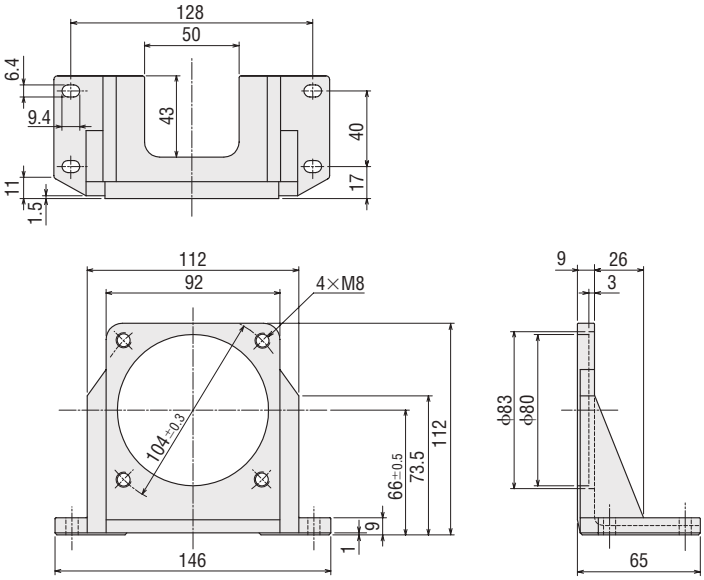

PFA28G

Mass: 40 g

2D CAD B640

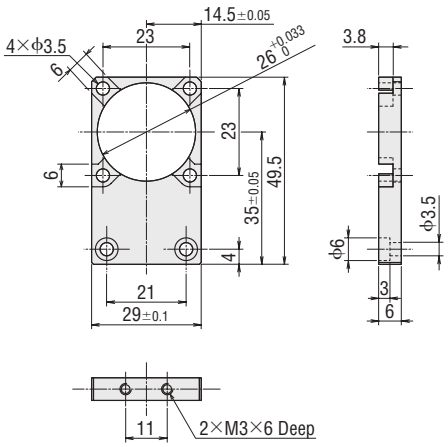

PFA42F

Mass: 150 g

2D CAD B643

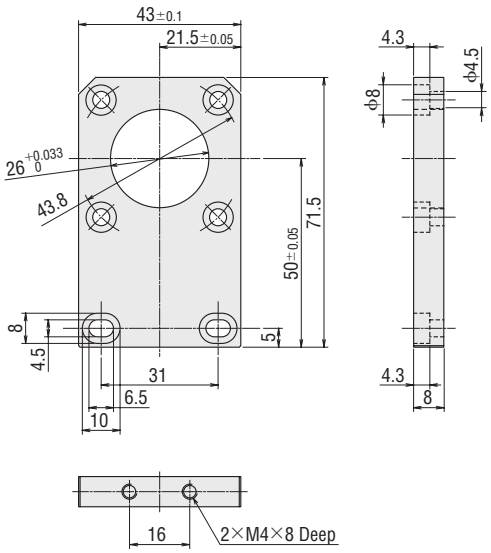

PFA42H

Mass: 120 g

2D CAD B644

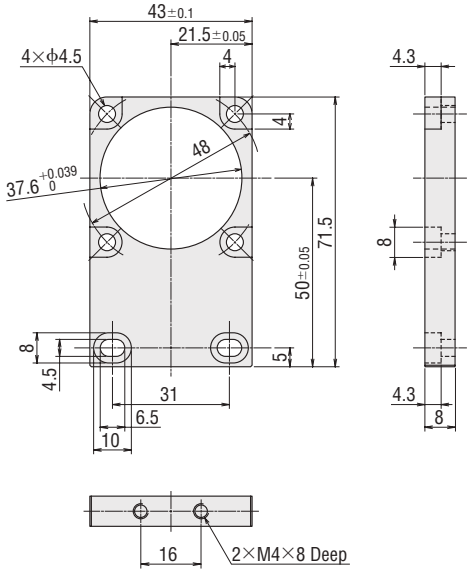

PLA60G

Mass: 0.7 kg

2D CAD B634

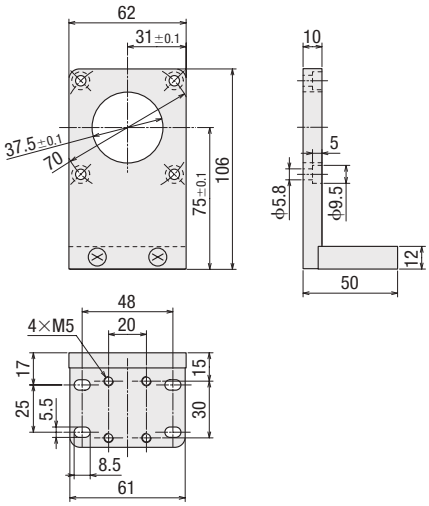

● Installation screws: M5 Length 15 mm
4 pieces included

PLA60H

Mass: 0.7 kg

2D CAD B635

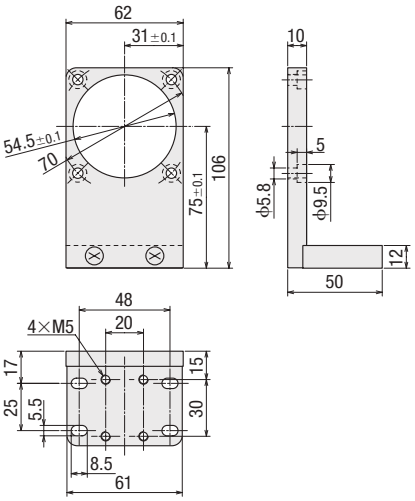

● Installation screws: M5 Length 15 mm
4 pieces included

PLA90G

Mass: 1.6 kg

2D CAD B637

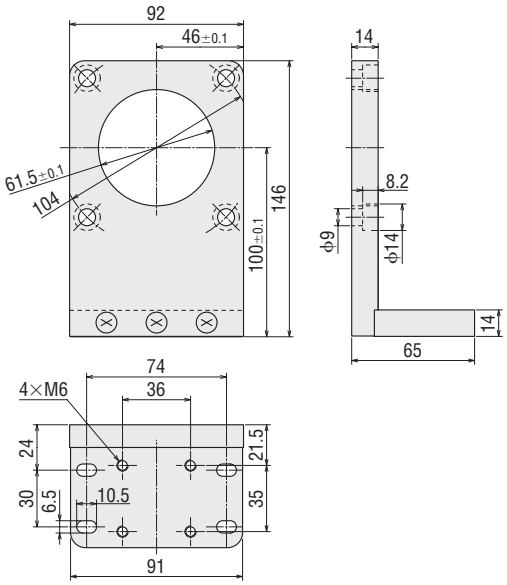

● Installation screws: M8 Length 20 mm
4 pieces included

PLA90H

Mass: 1.6 kg

2D CAD B638

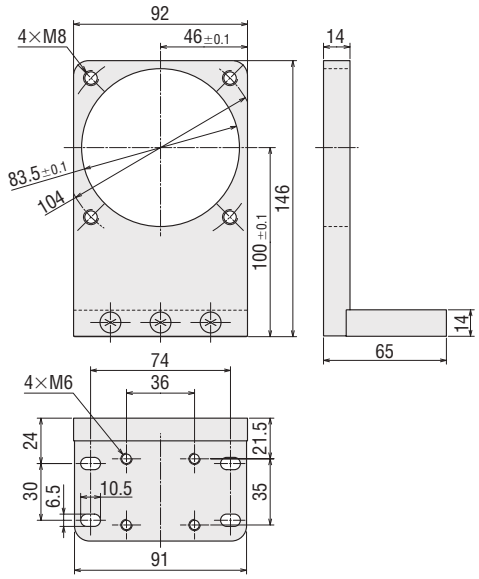

● Installation screws: M8 Length 30 mm 4 pieces included
4 washers included

Regeneration Resistor

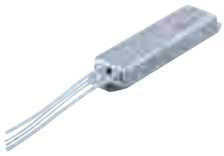

During vertical drive (gravitational operation) or sudden start/stop in high inertia, an external force causes the motor to rotate and function as a power generator. When the regenerative power exceeds the driver's regenerative power absorption capacity, it may cause damage to the motor.
In such a case, the regeneration resistor is connected to the driver to convert regenerative energy into thermal energy for dissipation.

Product Line

Product Name	Applicable Driver	List Price
RGB100	AC Power Supply Input Driver	SGD56

Specifications

Items	Description
Continuous Regenerative Power	50 W
Resistance Value	150 Ω
Thermostat Operating Temperature	Operation: 150±7°C Reset: 145±12°C (Normally closed)
Thermostat Electrical Rating	120 VAC, 4 A 30 VDC, 4 A (Min. current 5 mA)

● Install the regeneration resistor in the location that has the same heat radiation capability as the heat sink (Material: Aluminum 350×350 mm Thickness 3 mm).

Network Converters

The network converter converts host communication protocol to Oriental Motor's original RS-485 communication protocol. You can use a network converter to control Oriental Motor's RS-485-compatible products within the host communication environment.

NETC01-CC **NETC02-CC** **NETC01-M2** **NETC01-M3** **NETC01-ECT**

Product Line

Network Type	Product Name	List Price
CC-Link Ver.1.1 Compatible	**NETC01-CC**	SGD275
CC-Link Ver.2 Compatible	**NETC02-CC**	SGD275
MECHATROLINK-Ⅱ Compatible	**NETC01-M2**	SGD313
MECHATROLINK-Ⅲ Compatible	**NETC01-M3**	SGD350
Compatible with EtherCAT	**NETC01-ECT**	SGD350

STEPPING MOTORS

PKP Series

PKP Series/PK Series

●For detailed information about regulations and standards, please see the Oriental Motor website.

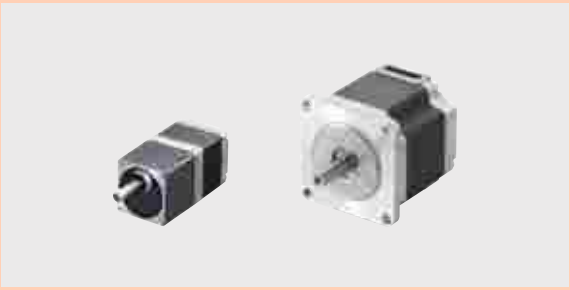

These products are high-torque 1.8°/0.9° stepping motors. A wide variety of products is available for selecting a motor that meets your design specifications.

- ●Standard Type with a Resolution of 200 Steps per Revolution (Basic step angle: 1.8°/step)
- ●High-Resolution Type with a Resolution of 400 Steps per Revolution (Basic step angle: 0.9°/step)
- ●Oriental Motor's Flattest Type of 1.8° Stepping Motor
- ●High-Torque and High-Resolution **SH** Geared Type
- ●Bipolar (4 lead wires) and Unipolar (5 or 6 lead wires) Are Available.
- ●Type with Encoder and Type with an Electromagnetic Brake Are Available.
- ●There is a Wide Variety of Motor Current Specifications.

Features

Increased Torque over the Entire Speed Range from Low to High

After revising the magnetic design and structure design of the **PKP** Series, it produces much more torque than standard **PK** Series motors of the same size. In addition, torque can be increased in the high-speed range by using high current motors.

Comparison of Speed – Torque Characteristics of the Same Size Motors

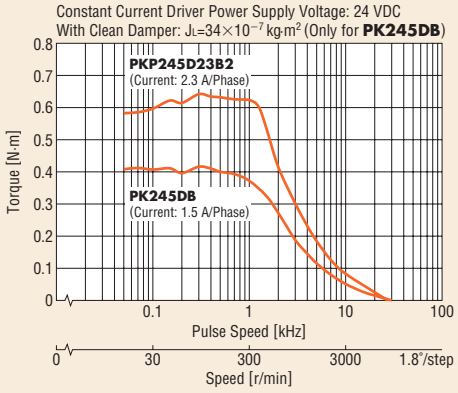

Comparison of Maximum Holding Torque

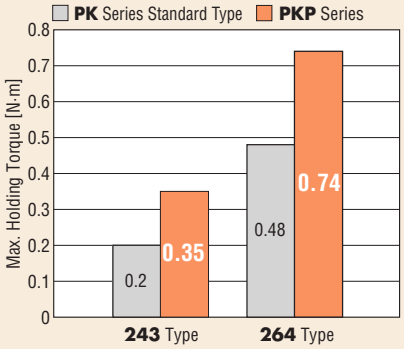

High current is possible due to the revised motor winding design and the highly efficient design of the drive circuit that can be combined. Increased torque over the entire speed range from low to high is achieved.

Compact and Flat Connector

The **PKP** Series uses a compact and flat connector, which shortens the length of the connector's overhang. In addition, the degree of freedom for the cable outlet direction has been increased, because the outlet direction points upward.

●Because the connector is provided for some products only, refer to dimensions of each model for details.

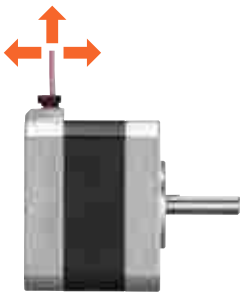

Lower Vibration

Revising the magnetic design has achieved lower vibration than with conventional products.

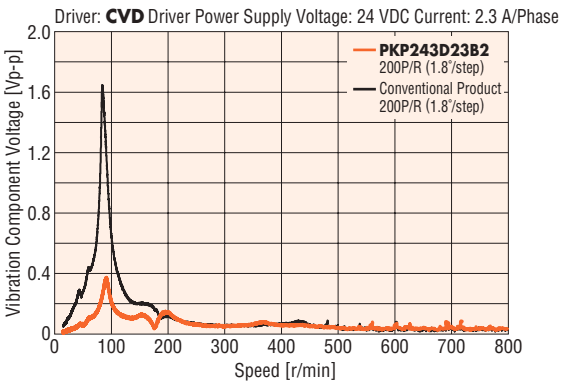

Downsizing

Use a **PKP** Series motor in place of a standard motor from the **PK** series with the equivalent torque in order to downsize motors.

Comparison of Torque Characteristics of **PKP244U12A2** and **PK264-02A**

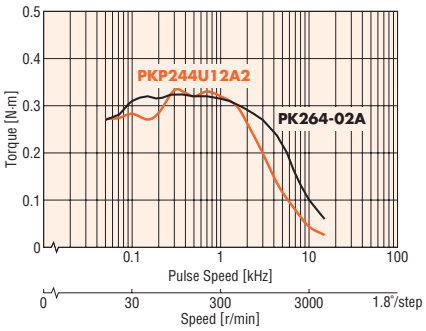

Downsizing is Possible with the Same Torque!

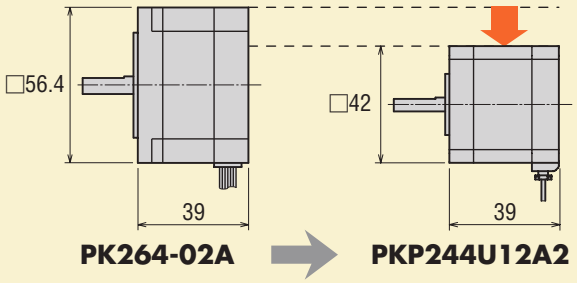

High-Resolution Type

This is a high-resolution stepping motor with a basic step angle of 0.9°. Stopping accuracy is improved.

Increased Resolution (Compared to Standard Type)

The number of rotor teeth has doubled to 100, compared to 50 with the standard type. As a result, the basic step angle is 0.9°/step, which is half that of the standard type.

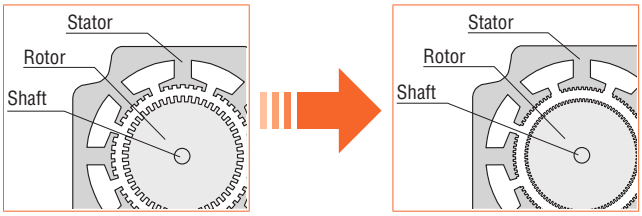

Standard Type (50 teeth) High-Resolution Type (100 teeth)

Avoidance of Resonance Regions

If the pulse speed is within a resonance region, vibration may increase. Resonance regions can be avoided by switching to a high-resolution type.

Improved Stopping Accuracy (Compared to Standard Type)

The stopping accuracy improves as the torque increases while minimizing the negative effects of frictional load.

Comparison of Angle – Torque Characteristics

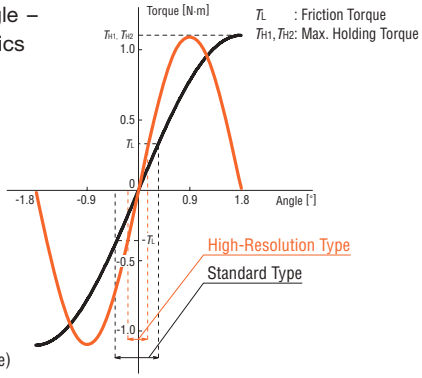

Flat Type

This is Oriental Motor's flattest type of 1.8° stepping motors.

Flat and Lightweight Design

The motor can be installed in a narrow space by being flatter.

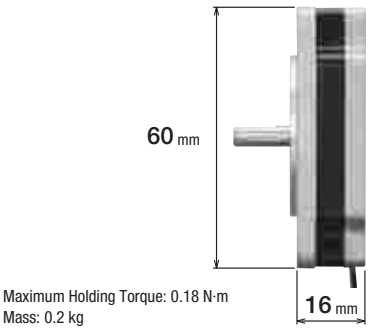

Maximum Holding Torque: 0.18 N·m
Mass: 0.2 kg

With Harmonic Gears

Products assembled with harmonic gears are also available. Attach the load to the surface of the flange to fix the load.

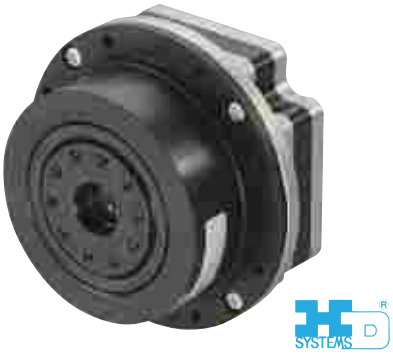

Maximum Holding Torque: 5.4 N·m
Installation Size: ϕ72 mm
Mass: 0.6 kg

HarmonicDrive® is a registered trademark of Harmonic Drive Systems Inc.

SH Geared Type

This type is advantageous for its deceleration, greater torque, higher resolution and anti-vibration measures.
It experiences less backlash than conventional products.
The increased speed range makes it viable in more application usages.

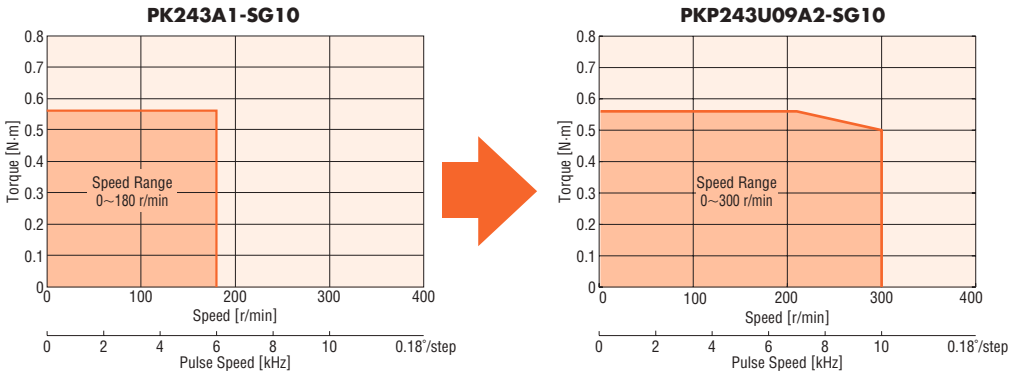

Product Line Equipped with Additional Functions to Further Broaden Applications

With Encoder

(Provided for standard type and high-resolution type)

Encoder Specifications ➜ Page 07-82

● Main Specifications

Type	Standard Type	High-Resolution Type
Resolution	200 P/R, 400 P/R	400 P/R
Output Signal	A Phase, B Phase, Z Phase (3ch)	

◇**Motor Position Detection is Possible.**

Monitoring the current position and detecting positional errors are possible. For example, comparing the command position and current position enables you to check the normal operation of the motor.

◇**Equipped with a Compact Encoder**

● When frame size is 42 mm

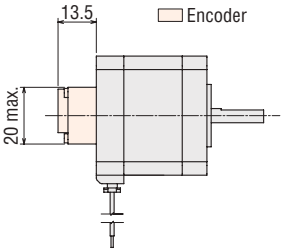

◇**High Reliability with Line Driver Output Circuit Type**

Noise resistance is improved by differential output, and the wiring distance can be longer than with the voltage output type.

Type with an Electromagnetic Brake

(Provided for standard type and high-resolution type)

Electromagnetic Brake ➜ Page 07-82

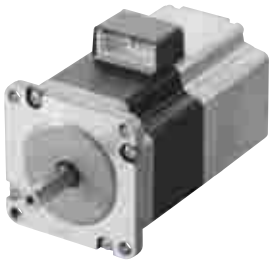

◇**Position Can Be Held When the Power Is OFF or a Power Failure Occurs.**

This type features an electromagnetic brake that activates when the power is off.
When the power is accidentally cut off due to a power failure or other unexpected event, the electromagnetic brake holds the load in position to prevent it from dropping or moving. Also, the load can be held by the electromagnetic brake when the motor is stopped, and the heat generated by the motor can be curtailed by switching the motor current off.

Combined Drivers (Sold separately)

The compact and lightweight bipolar driver and unipolar driver are available.

Bipolar Drivers

Right Angle Type with an Installation Plate

The connector points outward.

With an Installation Plate

The connector points upward.

Without an Installation Plate

The connector direction is upward.

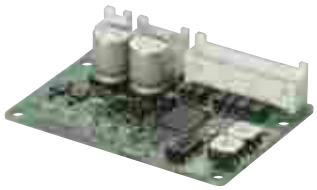

Unipolar Driver

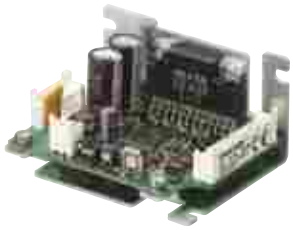

Lineup

Motor Product Line (Basic Step Angle)		Frame Size, Wiring Type															
		20mm		28mm		35mm		42mm		50mm		56.4mm		60mm		85mm	
		Unipolar	Bipolar	Unipolar	Bipolar	Unipolar	Bipolar	Unipolar	Bipolar	Unipolar	Bipolar	Unipolar	Bipolar	Unipolar	Bipolar	Unipolar	Bipolar
Standard Type (1.8°)		○	○	●	●	●	●	●	●	○*3	–	●	●	○*3	○*3	○	○
	With Encoder	○	○	●	●	●	●	●	●	–	–	●	●	–	–	–	–
	With Electromagnetic Brake	–	–	●	●	●	●	●	●	–	–	●	●	–	–	–	–
High-Resolution Type (0.9°)		–	–	–	–	–	–	●	●	–	–	●	●	–	–	–	–
	With Encoder	–	–	–	–	–	–	●	●	–	–	●	●	–	–	–	–
	With Electromagnetic Brake	–	–	–	–	–	–	●	●	–	–	●	●	–	–	–	–
Flat Type (1.8°~0.018°)		–	–	–	–	–	–	–	NEW ●	–	–	–	–	–	○	–	–
	Harmonic Geared Type	–	–	–	–	–	–	–	NEW ●*4	–	–	–	–	–	○*1	–	–
SH Geared Type (0.5°~0.05°)		–	–	●	●	–	–	●	●	–	–	–	–	●	●	*2 ○*3	–

●: Connector-coupled motors or motors equipped with a terminal box ○: Cable or Lead Wire Type

*1 Flat type with harmonic gears is ϕ72 mm.

*2 **SH** Geared type is 90mm.

*3 Conventional **PK** Series

*4 Flat type with harmonic gears is 51mm.

System Configuration

These accessories allow the 1.8°/0.9° Stepping Motor **PKP** Series to be used for various operations.
Motors and connection cables must be ordered individually.

1.8°/0.9° Stepping Motors PKP Series

Motor

A connection cable is required for connector-coupled motors and motors equipped with a terminal box.

Connection Cable

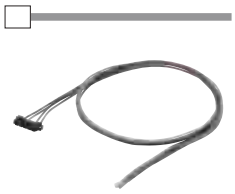

Motors and cables are must be ordered individually.

Required Drive Products (Sold separately)

Bipolar Driver
➜ Page 07-107

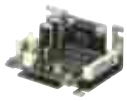

Unipolar Driver
➜ Page 07-107

Accessories (Sold separately)

MCV Couplings
➜ Page 07-114

Motor Mounting Brackets
➜ Page 07-114

Clean Dampers
➜ Page 07-117

Motor Connector Set
➜ Page 07-117

●System Configuration Example

1.8°/0.9° Stepping Motors PKP Series			Sold Separately		
Motor	Connnection Cable	+	Motor Mounting Bracket	Flexible Coupling	Clean Damper
PKP264D28B2	**LC2B06E**		**PAL2P-2**	**MCV190808**	**D6CL-8.0F**
SGD66	SGD6		SGD14	SGD90	SGD35

●The system configuration shown above is an example. Other combinations are also available.

Product Number Code

●Motor

PKP Series

◇Standard Type/Standard Type with Electromagnetic Brake

PKP 2 6 4 D 28 A 2

① ② ③ ④ ⑥ ⑦ ⑧ ⑨

◇High-Resolution Type/High-Resolution Type with Electromagnetic Brake

PKP 2 6 4 M D 28 A

① ② ③ ④ ⑤ ⑥ ⑦ ⑧

①	Series Name	**PKP**: **PKP** Series
②	**2**: 1.8°/0.9° Stepping Motor	
③	Motor Frame Size	**1**: 20 mm **2**: 28 mm **3**: 35 mm **4**: 42 mm **6**: 56.4 mm (60 mm when the motor classification is "F") **9**: 85 mm
④	Motor Case Length	
⑤	Motor Type	Blank: Standard Type **M**: High-Resolution Type
⑥	Number of Lead Wires	**D**: 4 Leads **U**: 5 or 6 Leads
⑦	Motor Winding Specifications	
⑧	Configuration	**A**: Single Shaft **B**: Double Shaft **M**: With Electromagnetic Brake
⑨	Reference Number	

✻Products with a 6 mm motor shaft diameter are also available. For details, please contact your nearest Oriental Motor sales office.

◇Standard Type with Encoder

PKP 2 4 3 D 15 A 2 - R2F L

① ② ③ ④ ⑥ ⑦ ⑧ ⑨ ⑩ ⑪

◇High-Resolution Type with Encoder

PKP 2 4 3 M D 15 A - R2F L

① ② ③ ④ ⑤ ⑥ ⑦ ⑧ ⑩ ⑪

①	Series Name	**PKP** : **PKP** Series
②	**2**: 1.8°/0.9° Stepping Motor	
③	Motor Frame Size	**1**: 20 mm **2**: 28 mm **3**: 35 mm **4**: 42 mm **6**: 56.4 mm
④	Motor Case Length	
⑤	Motor Type	Blank: Standard Type **M**: High-Resolution Type
⑥	Number of Lead Wires	**D**: 4 Leads **U**: 5 or 6 Leads
⑦	Motor Winding Specifications	
⑧	Configuration	**A**: Single Shaft
⑨	Reference Number	
⑩	Encoder Resolution	**R2E**: 200P/R **R2F**: 400P/R
⑪	Encoder Output Circuit Type	**L**: Line Driver Output*

*Encoder of voltage output for output circuit type is also available. For details, please contact your nearest Oriental Motor sales office.

◇Flat Type

PKP 2 4 2 D 23 A 2

① ② ③ ④ ⑥ ⑦ ⑧ ⑩

PKP 2 6 2 F D 15 A W

① ② ③ ④ ⑤ ⑥ ⑦ ⑧ ⑨

◇Flat Type with Harmonic Gears

PKP 2 4 2 D 23 A 2 - H 100

① ② ③ ④ ⑥ ⑦ ⑧ ⑩ ⑪ ⑫

PKP 2 6 2 F D 15 A W - H 100

① ② ③ ④ ⑤ ⑥ ⑦ ⑧ ⑨ ⑪ ⑫

①	Series Name	**PKP** : **PKP** Series
②	**2**: 1.8° Stepping Motor	
③	Motor Frame Size	**4**: 42 mm (The type with harmonic gears is 51 mm) **6**: 60 mm (The type with harmonic gears is Φ72 mm)
④	Motor Case Length	
⑤	Motor Classification	**F**: Motor Frame Size of 60 mm
⑥	Number of Lead Wires	**D**: 4 Leads
⑦	Motor Winding Specifications	
⑧	Configuration	**A**: Single Shaft
⑨	Cable Identification	Blank: Connector Type **W**: Lead Wire Type
⑩	Reference Number	
⑪	Geared Type	**H**: Harmonic Geared Type
⑫	Gear Ratio	

◇SH Geared Type

PKP 2 4 3 U 09 B 2 - SG 18

① ② ③ ④ ⑤ ⑥ ⑦ ⑧ ⑨ ⑩

①	Series Name	**PKP** : **PKP** Series
②	**2**: 1.8° Stepping Motor	
③	Motor Frame Size	**2**: 28 mm **4**: 42 mm **6**: 60 mm
④	Motor Case Length	
⑤	Number of Lead Wires	**D**: 4 Leads **U**: 5 or 6 Leads
⑥	Motor Winding Specifications	
⑦	Configuration	**A**: Single Shaft **B**: Double Shaft
⑧	Reference Number	
⑨	Gear Type	**SG** : **SH** geared Type
⑩	Gear Ratio	

PK Series

◇Standard Type

PK 2 6 4 J D B

① ② ③ ④ ⑤ ⑥ ⑦

①	Series Name	**PK** : **PK** Series
②	**2**: 1.8° Stepping Motor	
③	Motor Frame Size	**6**: 60 mm
④	Motor Case Length	
⑤	Motor Type	**J**: High-Torque Type
⑥	Number of Lead Wires	Blank: 6 Leads **D**: 4 Leads
⑦	Configuration	**A**: Single Shaft **B**: Double Shaft

◇Standard Type (Unipolar 6 lead wires)

PK 2 5 6 - 0 2 B

① ② ③ ④ ⑤ ⑥ ⑦

①	Series Name	**PK** : **PK** Series
②	**2**: 1.8° Stepping Motor	
③	Motor Frame Size	**5**: 50 mm
④	Motor Case Length	
⑤	Reference Number	
⑥	Motor Winding Specifications	
⑦	Configuration	**A**: Single Shaft **B**: Double Shaft

◇SH Geared Type

PK 2 9 6 A 1 - SG 18

① ② ③ ④ ⑤ ⑥ ⑦ ⑧

①	Series Name	**PK** : **PK** Series
②	**2**: 1.8° Stepping Motor	
③	Motor Frame Size	**9**: 90 mm
④	Motor Case Length	
⑤	Configuration	**A**: Single Shaft **B**: Double Shaft
⑥	Motor Winding Specifications	
⑦	Geared Type	**H**: Harmonic Geared Type
⑧	Gear Ratio	

Connection Cable

◇Connection Cable for Motor

LC 2 B 06 A

① ② ③ ④ ⑤

①	Cable	**LC**: Connector Leads
②	**2**: 1.8°/0.9° Stepping Motor	
③	Cable Type	**B**: For Bipolar **U**: For Unipolar
④	Cable Length	**06**: 0.6 m **10**: 1 m
⑤	Reference Number	

◇Connection Cable for Encoder

LC E 08 A - 006

① ② ③ ④ ⑤

①	Cable	**LC**: Connector Leads
②	Cable Type	**E**: For Encoder
③	Applicable Models	**08**: For Line Driver Output*
④	Reference Number	
⑤	Cable Length	**006**: 0.6 m

*The voltage output cable is also available.
For details, please contact your nearest Oriental Motor sales office.

Product Line

A connector cable is required for the connector type motor. The motor and connection cable are purchased separate.
For details on the connection cable, refer to page 07-115.

Motors

◇Standard Type

•Unipolar (5 or 6 Lead Wires)

Product Name (Single Shaft)	List Price	Product Name (Double Shaft)	List Price
PKP213U05A	SGD69	**PKP213U05B**	SGD71
PKP214U06A	SGD75	**PKP214U06B**	SGD78
PKP223U09A2	SGD50	**PKP223U09B2**	SGD53
PKP225U09A2	SGD60	**PKP225U09B2**	SGD63
PKP233U12A	SGD50	**PKP233U12B**	SGD53
PKP235U12A	SGD60	**PKP235U12B**	SGD63
PKP243U08A2 NEW	SGD50	**PKP243U08B2** NEW	SGD53
PKP243U09A2	SGD50	**PKP243U09B2**	SGD53
PKP243U12A2 NEW	SGD50	**PKP243U12B2** NEW	SGD53
PKP244U08A2 NEW	SGD53	**PKP244U08B2** NEW	SGD55
PKP244U12A2	SGD53	**PKP244U12B2**	SGD55
PKP245U08A2 NEW	SGD60	**PKP245U08B2** NEW	SGD63
PKP245U12A2	SGD60	**PKP245U12B2**	SGD63
PKP246U12A2	SGD63	**PKP246U12B2**	SGD66
PKP246U16A2 NEW	SGD63	**PKP246U16B2** NEW	SGD66
PK256-02A	SGD113	**PK256-02B**	SGD117
PK258-02A	SGD126	**PK258-02B**	SGD130
PKP264U10A2	SGD63	**PKP264U10B2**	SGD66
PKP264U20A2	SGD63	**PKP264U20B2**	SGD66
PKP266U10A2	SGD69	**PKP266U10B2**	SGD72
PKP266U20A2	SGD69	**PKP266U20B2**	SGD72
PKP268U10A2	SGD88	**PKP268U10B2**	SGD91
PKP268U20A2	SGD88	**PKP268U20B2**	SGD91
PK264JA	SGD93	**PK264JB**	SGD96
PK266JA	SGD101	**PK266JB**	SGD104
PK267JA	SGD120	**PK267JB**	SGD124
PK269JA	SGD150	**PK269JB**	SGD154
PKP296U20A	SGD123	**PKP296U20B**	SGD127
PKP296U30A	SGD123	**PKP296U30B**	SGD127
PKP296U45A	SGD123	**PKP296U45B**	SGD127
PKP299U20A	SGD188	**PKP299U20B**	SGD194
PKP299U30A	SGD188	**PKP299U30B**	SGD194
PKP299U45A	SGD188	**PKP299U45B**	SGD194
PKP2913U20A	SGD238	**PKP2913U20B**	SGD248
PKP2913U40A	SGD238	**PKP2913U40B**	SGD248

•Bipolar (4 Lead Wires)

Product Name (Single Shaft)	List Price	Product Name (Double Shaft)	List Price
PKP213D05A	SGD69	**PKP213D05B**	SGD71
PKP214D06A	SGD75	**PKP214D06B**	SGD78
PKP223D15A2	SGD50	**PKP223D15B2**	SGD53
PKP225D15A2	SGD60	**PKP225D15B2**	SGD63
PKP233D15A	SGD50	**PKP233D15B**	SGD53
PKP233D23A	SGD50	**PKP233D23B**	SGD53
PKP235D15A	SGD60	**PKP235D15B**	SGD63
PKP235D23A	SGD60	**PKP235D23B**	SGD63
PKP243D08A2 NEW	SGD50	**PKP243D08B2** NEW	SGD53
PKP243D15A2	SGD50	**PKP243D15B2**	SGD53
PKP243D23A2	SGD50	**PKP243D23B2**	SGD53
PKP244D08A2 NEW	SGD53	**PKP244D08B2** NEW	SGD55
PKP244D15A2	SGD53	**PKP244D15B2**	SGD55
PKP244D23A2	SGD53	**PKP244D23B2**	SGD55
PKP245D08A2 NEW	SGD60	**PKP245D08B2** NEW	SGD63
PKP245D15A2	SGD60	**PKP245D15B2**	SGD63
PKP245D23A2	SGD60	**PKP245D23B2**	SGD63
PKP246D15A2	SGD63	**PKP246D15B2**	SGD66
PKP246D23A2	SGD63	**PKP246D23B2**	SGD66
PKP264D14A2	SGD63	**PKP264D14B2**	SGD66
PKP264D28A2	SGD63	**PKP264D28B2**	SGD66
PKP264D42A2	SGD63	**PKP264D42B2**	SGD66
PKP266D14A2	SGD69	**PKP266D14B2**	SGD72
PKP266D28A2	SGD69	**PKP266D28B2**	SGD72
PKP266D42A2	SGD69	**PKP266D42B2**	SGD72
PKP268D14A2	SGD88	**PKP268D14B2**	SGD91
PKP268D28A2	SGD88	**PKP268D28B2**	SGD91
PKP268D42A2	SGD88	**PKP268D42B2**	SGD91
PK264JDA	SGD93	**PK264JDB**	SGD96
PK266JDA	SGD101	**PK266JDB**	SGD104
PK267JDA	SGD120	**PK267JDB**	SGD124
PK269JDA	SGD150	**PK269JDB**	SGD154
PKP296D45A	SGD123	**PKP296D45B**	SGD127
PKP296D63A	SGD123	**PKP296D63B**	SGD127
PKP299D45A	SGD188	**PKP299D45B**	SGD194
PKP299D63A	SGD188	**PKP299D63B**	SGD194
PKP2913D45A	SGD238	**PKP2913D45B**	SGD248
PKP2913D56A	SGD238	**PKP2913D56B**	SGD248

◇Standard Type with Encoder

•Unipolar (5 or 6 Lead Wires)

Product Name	List Price
PKP213U05A-R2EL	SGD131
PKP214U06A-R2EL	SGD138
PKP223U09A2-R2EL	SGD113
PKP225U09A2-R2EL	SGD123
PKP233U12A-R2EL	SGD113
PKP235U12A-R2EL	SGD123
PKP243U09A2-R2EL	SGD113
PKP243U09A2-R2FL	SGD113
PKP244U12A2-R2EL	SGD115
PKP244U12A2-R2FL	SGD115
PKP245U12A2-R2EL	SGD123
PKP245U12A2-R2FL	SGD123
PKP246U12A2-R2EL	SGD125
PKP246U12A2-R2FL	SGD125
PKP264U10A2-R2EL	SGD125
PKP264U10A2-R2FL	SGD125
PKP264U20A2-R2EL	SGD125
PKP264U20A2-R2FL	SGD125
PKP266U10A2-R2EL	SGD131
PKP266U10A2-R2FL	SGD131
PKP266U20A2-R2EL	SGD131
PKP266U20A2-R2FL	SGD131
PKP268U10A2-R2EL	SGD150
PKP268U10A2-R2FL	SGD150
PKP268U20A2-R2EL	SGD150
PKP268U20A2-R2FL	SGD150

•Bipolar (4 Lead Wires)

Product Name	List Price
PKP213D05A-R2EL	SGD131
PKP214D06A-R2EL	SGD138
PKP223D15A2-R2EL	SGD113
PKP225D15A2-R2EL	SGD123
PKP233D15A-R2EL	SGD113
PKP235D15A-R2EL	SGD123
PKP243D15A2-R2EL	SGD113
PKP243D15A2-R2FL	SGD113
PKP243D23A2-R2EL	SGD113
PKP243D23A2-R2FL	SGD113
PKP244D15A2-R2EL	SGD115
PKP244D15A2-R2FL	SGD115
PKP244D23A2-R2EL	SGD115
PKP244D23A2-R2FL	SGD115
PKP245D15A2-R2EL	SGD123
PKP245D15A2-R2FL	SGD123
PKP245D23A2-R2EL	SGD123
PKP245D23A2-R2FL	SGD123
PKP246D15A2-R2EL	SGD125
PKP246D15A2-R2FL	SGD125
PKP246D23A2-R2EL	SGD125
PKP246D23A2-R2FL	SGD125
PKP264D14A2-R2EL	SGD125
PKP264D14A2-R2FL	SGD125
PKP264D28A2-R2EL	SGD125
PKP264D28A2-R2FL	SGD125
PKP264D42A2-R2EL	SGD125
PKP264D42A2-R2FL	SGD125
PKP266D14A2-R2EL	SGD131
PKP266D14A2-R2FL	SGD131
PKP266D28A2-R2EL	SGD131
PKP266D28A2-R2FL	SGD131
PKP266D42A2-R2EL	SGD131
PKP266D42A2-R2FL	SGD131
PKP268D14A2-R2EL	SGD150
PKP268D14A2-R2FL	SGD150
PKP268D28A2-R2EL	SGD150
PKP268D28A2-R2FL	SGD150
PKP268D42A2-R2EL	SGD150
PKP268D42A2-R2FL	SGD150

◇Standard Type with Electromagnetic Brake

•Unipolar (6 Lead Wires)

Product Name	List Price
PKP223U09M2	SGD125
PKP225U09M2	SGD135
PKP233U12M	SGD163
PKP235U12M	SGD173
PKP243U09M	SGD163
PKP244U12M	SGD165
PKP245U12M	SGD173
PKP246U12M	SGD175
PKP264U20M	SGD188
PKP266U20M	SGD194
PKP268U20M	SGD213

•Bipolar (4 Lead Wires)

Product Name	List Price
PKP223D15M2	SGD125
PKP225D15M2	SGD135
PKP233D15M	SGD163
PKP235D15M	SGD173
PKP243D15M	SGD163
PKP244D15M	SGD165
PKP245D15M	SGD173
PKP246D15M	SGD175
PKP264D28M	SGD188
PKP266D28M	SGD194
PKP268D28M	SGD213

◇High-Resolution Type

•Unipolar (6 Lead Wires)

Product Name (Single Shaft)	List Price	Product Name (Double Shaft)	List Price
PKP243MU09A	SGD50	**PKP243MU09B**	SGD53
PKP244MU12A	SGD53	**PKP244MU12B**	SGD55
PKP264MU20A	SGD63	**PKP264MU20B**	SGD66
PKP266MU20A	SGD69	**PKP266MU20B**	SGD72
PKP268MU20A	SGD88	**PKP268MU20B**	SGD91

•Bipolar (4 Lead Wires)

Product Name (Single Shaft)	List Price	Product Name (Double Shaft)	List Price
PKP243MD15A	SGD50	**PKP243MD15B**	SGD53
PKP244MD15A	SGD53	**PKP244MD15B**	SGD55
PKP264MD28A	SGD63	**PKP264MD28B**	SGD66
PKP266MD28A	SGD69	**PKP266MD28B**	SGD72
PKP268MD28A	SGD88	**PKP268MD28B**	SGD91

◇High-Resolution Type with Encoder

•Unipolar (6 Lead Wires)

Product Name	List Price
PKP243MU09A-R2FL	SGD113
PKP244MU12A-R2FL	SGD115
PKP264MU20A-R2FL	SGD125
PKP266MU20A-R2FL	SGD131
PKP268MU20A-R2FL	SGD150

•Bipolar (4 Lead Wires)

Product Name	List Price
PKP243MD15A-R2FL	SGD113
PKP244MD15A-R2FL	SGD115
PKP264MD28A-R2FL	SGD125
PKP266MD28A-R2FL	SGD131
PKP268MD28A-R2FL	SGD150

◇High-Resolution Type with Electromagnetic Brake

•Unipolar (6 Lead Wires)

Product Name	List Price
PKP243MU09M	SGD163
PKP244MU12M	SGD165
PKP264MU20M	SGD188
PKP266MU20M	SGD194
PKP268MU20M	SGD213

•Bipolar (4 Lead Wires)

Product Name	List Price
PKP243MD15M	SGD163
PKP244MD15M	SGD165
PKP264MD28M	SGD188
PKP266MD28M	SGD194
PKP268MD28M	SGD213

◇Flat Type

•Bipolar (4 Lead Wires)

Product Name (Single Shaft)	List Price
PKP242D23A2 NEW	SGD56
PKP262FD15AW	SGD63

◇Flat Type with Harmonic Gears

•Bipolar (4 Lead Wires)

Product Name (Single Shaft)	List Price
PKP242D23A2-H50 NEW	SGD825
PKP242D23A2-H100 NEW	SGD825
PKP262FD15AW-H50	SGD938
PKP262FD15AW-H100	SGD938

◇**SH** Geared Type

•Unipolar (5 or 6 Lead Wires)

Product Name (Single Shaft)	List Price	Product Name (Double Shaft)	List Price
PKP223U09A-SG7.2	SGD151	**PKP223U09B-SG7.2**	SGD154
PKP223U09A-SG9	SGD151	**PKP223U09B-SG9**	SGD154
PKP223U09A-SG10	SGD151	**PKP223U09B-SG10**	SGD154
PKP223U09A-SG18	SGD169	**PKP223U09B-SG18**	SGD171
PKP223U09A-SG36	SGD169	**PKP223U09B-SG36**	SGD171
PKP243U09A2-SG3.6	SGD131	**PKP243U09B2-SG3.6**	SGD134
PKP243U09A2-SG7.2	SGD131	**PKP243U09B2-SG7.2**	SGD134
PKP243U09A2-SG9	SGD131	**PKP243U09B2-SG9**	SGD134
PKP243U09A2-SG10	SGD131	**PKP243U09B2-SG10**	SGD134
PKP243U09A2-SG18	SGD150	**PKP243U09B2-SG18**	SGD153
PKP243U09A2-SG36	SGD150	**PKP243U09B2-SG36**	SGD153
PKP264U10A2-SG3.6	SGD150	**PKP264U10B2-SG3.6**	SGD153
PKP264U20A2-SG3.6	SGD150	**PKP264U20B2-SG3.6**	SGD153
PKP264U10A2-SG7.2	SGD150	**PKP264U10B2-SG7.2**	SGD153
PKP264U20A2-SG7.2	SGD150	**PKP264U20B2-SG7.2**	SGD153
PKP264U10A2-SG9	SGD150	**PKP264U10B2-SG9**	SGD153
PKP264U20A2-SG9	SGD150	**PKP264U20B2-SG9**	SGD153
PKP264U10A2-SG10	SGD150	**PKP264U10B2-SG10**	SGD153
PKP264U20A2-SG10	SGD150	**PKP264U20B2-SG10**	SGD153
PKP264U10A2-SG18	SGD168	**PKP264U10B2-SG18**	SGD171
PKP264U20A2-SG18	SGD168	**PKP264U20B2-SG18**	SGD171
PKP264U10A2-SG36	SGD168	**PKP264U10B2-SG36**	SGD171
PKP264U20A2-SG36	SGD168	**PKP264U20B2-SG36**	SGD171
PK296A1-SG3.6	SGD263	**PK296B1-SG3.6**	SGD267
PK296A2-SG3.6	SGD263	**PK296B2-SG3.6**	SGD267
PK296A1-SG7.2	SGD263	**PK296B1-SG7.2**	SGD267
PK296A2-SG7.2	SGD263	**PK296B2-SG7.2**	SGD267
PK296A1-SG9	SGD263	**PK296B1-SG9**	SGD267
PK296A2-SG9	SGD263	**PK296B2-SG9**	SGD267
PK296A1-SG10	SGD263	**PK296B1-SG10**	SGD267
PK296A2-SG10	SGD263	**PK296B2-SG10**	SGD267
PK296A1-SG18	SGD263	**PK296B1-SG18**	SGD267
PK296A2-SG18	SGD263	**PK296B2-SG18**	SGD267
PK296A1-SG36	SGD274	**PK296B1-SG36**	SGD278
PK296A2-SG36	SGD274	**PK296B2-SG36**	SGD278

•Bipolar (4 Lead Wires)

Product Name (Single Shaft)	List Price	Product Name (Double Shaft)	List Price
PKP223D15A-SG7.2	SGD151	**PKP223D15B-SG7.2**	SGD154
PKP223D15A-SG9	SGD151	**PKP223D15B-SG9**	SGD154
PKP223D15A-SG10	SGD151	**PKP223D15B-SG10**	SGD154
PKP223D15A-SG18	SGD169	**PKP223D15B-SG18**	SGD171
PKP223D15A-SG36	SGD169	**PKP223D15B-SG36**	SGD171
PKP243D15A2-SG3.6	SGD131	**PKP243D15B2-SG3.6**	SGD134
PKP243D23A2-SG3.6	SGD131	**PKP243D23B2-SG3.6**	SGD134
PKP243D15A2-SG7.2	SGD131	**PKP243D15B2-SG7.2**	SGD134
PKP243D23A2-SG7.2	SGD131	**PKP243D23B2-SG7.2**	SGD134
PKP243D15A2-SG9	SGD131	**PKP243D15B2-SG9**	SGD134
PKP243D23A2-SG9	SGD131	**PKP243D23B2-SG9**	SGD134
PKP243D15A2-SG10	SGD131	**PKP243D15B2-SG10**	SGD134
PKP243D23A2-SG10	SGD131	**PKP243D23B2-SG10**	SGD134
PKP243D15A2-SG18	SGD150	**PKP243D15B2-SG18**	SGD153
PKP243D23A2-SG18	SGD150	**PKP243D23B2-SG18**	SGD153
PKP243D15A2-SG36	SGD150	**PKP243D15B2-SG36**	SGD153
PKP243D23A2-SG36	SGD150	**PKP243D23B2-SG36**	SGD153
PKP264D14A2-SG3.6	SGD150	**PKP264D14B2-SG3.6**	SGD153
PKP264D28A2-SG3.6	SGD150	**PKP264D28B2-SG3.6**	SGD153
PKP264D14A2-SG7.2	SGD150	**PKP264D14B2-SG7.2**	SGD153
PKP264D28A2-SG7.2	SGD150	**PKP264D28B2-SG7.2**	SGD153
PKP264D14A2-SG9	SGD150	**PKP264D14B2-SG9**	SGD153
PKP264D28A2-SG9	SGD150	**PKP264D28B2-SG9**	SGD153
PKP264D14A2-SG10	SGD150	**PKP264D14B2-SG10**	SGD153
PKP264D28A2-SG10	SGD150	**PKP264D28B2-SG10**	SGD153
PKP264D14A2-SG18	SGD168	**PKP264D14B2-SG18**	SGD171
PKP264D28A2-SG18	SGD168	**PKP264D28B2-SG18**	SGD171
PKP264D14A2-SG36	SGD168	**PKP264D14B2-SG36**	SGD171
PKP264D28A2-SG36	SGD168	**PKP264D28B2-SG36**	SGD171

Connection Cables

The applicable motors of the connection cable are shown in the dimensions of each product.

◇Motor Cables (For unipolar)

Product Name	Length L (m)	List Price
LC2U06A	0.6	SGD6
LC2U10A	1	SGD9
LC2U06B	0.6	SGD6
LC2U10B	1	SGD9
LC2U06C	0.6	SGD6
LC2U10C	1	SGD9
LC2U06E	0.6	SGD6

◇Motor Cables (For bipolar)

Product Name	Length L (m)	List Price
LC2B06A	0.6	SGD6
LC2B06B	0.6	SGD6
LC2B06C	0.6	SGD6
LC2B06E	0.6	SGD6

◇Encoder Cable (Line driver output)

Product Name	Length L (m)	List Price
LCE08A-006	0.6	SGD13

Included

Type		Motor Installation Screw	Parallel Key	Varistor	Operating Manual
Standard Type High-Resolution Type Flat Type		–	–	–	1 Set
Type with an Electromagnetic Brake		–	–	1 Piece	1 Set
SH Geared Type	Frame Size 28 mm Frame Size 42 mm Frame Size 60 mm	–	–	–	1 Set
	Frame Size 90 mm	M6×18 P1.0 (4 Screws)	1 Piece	–	1 Set

Glossary of Specification Table

Maximum Holding Torque	:This is the maximum holding torque (holding force) the motor has when power is supplied (at rated current) but the motor is not rotating. (With geared types, the value of holding torque considers the permissible strength of the gear.)
Permissible Torque	:This is the maximum torque that can be continuously applied to the gear output shaft. For the **SH** geared types, the total torque including acceleration and deceleration torque should not exceed the permissible torque.
Maximum Instantaneous Torque	:This is the maximum torque that can be applied to the gear output shaft during acceleration/deceleration such when an inertial load is started and stopped.
Holding Torque at Motor Standstill	:This is the holding torque when the automatic current cutback function is active.

Standard Type Frame Size 20 mm (Unipolar 5 lead wires)

Specifications

Product Name	Maximum Holding Torque N·m	Rotor Inertia J: kg·m^2	Rated Current A/Phase	Voltage VDC	Winding Resistance Ω/Phase	Inductance mH/Phase	Basic Step Angle	Recommended Driver Product Name*
PKP213U05□	0.014	1.6×10^{-7}	0.5	4.25	8.5	2.9	1.8°	**CMD2109P**
PKP214U06□	0.026	2.9×10^{-7}	0.6	4.2	7	2.4		

● Either **A** (Single Shaft) or **B** (Double Shaft) indicating the configuration is specified where the box □ is located in the product name.
*Refer to page 07-112 for details on the recommended driver.

Speed – Torque Characteristics (Reference values)

PKP213U05A/PKP213U05B

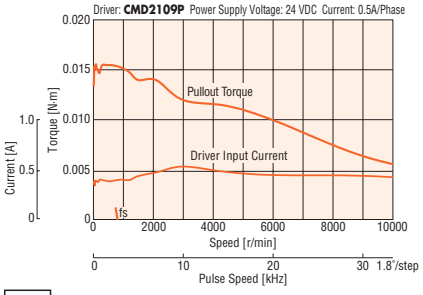

PKP214U06A/PKP214U06B

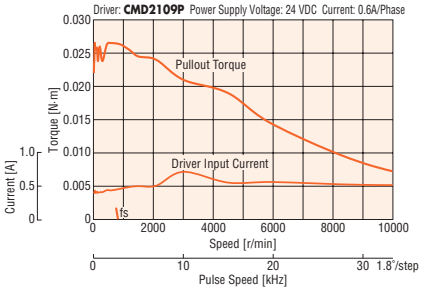

Note

● Data for the speed – torque characteristics is based on Oriental Motor's internal measurement conditions. If the conditions are changed, the characteristics may also change as a result.
● Depending on the driving conditions, a considerable amount of heat may be generated by the motor. Be sure to keep the motor case temperature at 100°C or less.

Dimensions (Unit: mm)

Motor

2D & 3D CAD

Product Name	L1	L2	Mass kg	2D CAD
PKP213U05A	30	–	0.05	B977
PKP213U05B		38		
PKP214U06A	40	–	0.07	B979
PKP214U06B		48		

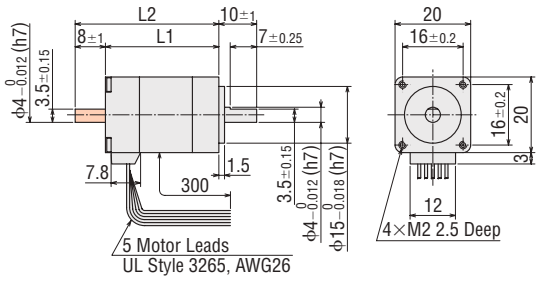

● These dimensions are for double shaft motors.
For single shaft motors, ignore the shaded ▭ areas.
● Back shaft of double shaft products have a flat the whole length.

Inner Wiring Diagram of Motor

Wiring Diagram No.: ⑥
● Refer to page 07-85 for inner wiring diagram of motor.

Standard Type Frame Size 20 mm (Bipolar 4 lead wires)

Specifications

Product Name	Maximum Holding Torque N·m	Rotor Inertia J: kg·m^2	Rated Current A/Phase	Voltage VDC	Winding Resistance Ω/Phase	Inductance mH/Phase	Basic Step Angle	Recommended Driver Product Name*
PKP213D05□	0.02	1.6×10^{-7}	0.5	4.25	8.5	4.1	1.8°	**CVD205BR-K**
PKP214D06□	0.036	2.9×10^{-7}	0.6	3.9	6.5	3.5		**CVD206BR-K**

● Either **A** (Single Shaft) or **B** (Double Shaft) indicating the configuration is specified where the box □ is located in the product name.
*Refer to page 07-108 for details on the recommended driver.

Speed – Torque Characteristics (Reference values)

PKP213D05A/PKP213D05B

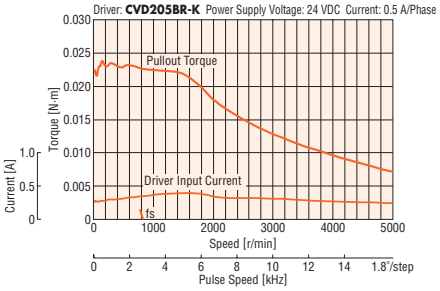

PKP214D06A/PKP214D06B

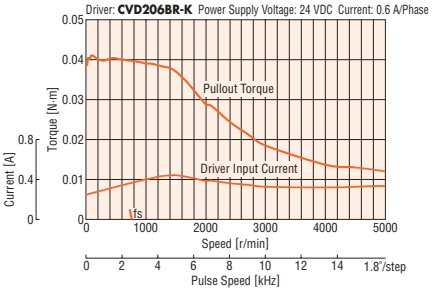

Note

● Data for the speed – torque characteristics is based on Oriental Motor's internal measurement conditions. If the conditions are changed, the characteristics may also change as a result.
● Depending on the driving conditions, a considerable amount of heat may be generated by the motor. Be sure to keep the motor case temperature at 100°C or less.

Dimensions (Unit: mm)

Motor

2D & 3D CAD

Product Name	L1	L2	Mass kg	2D CAD
PKP213D05A	30	–	0.05	B976
PKP213D05B		38		
PKP214D06A	40	–	0.07	B978
PKP214D06B		48		

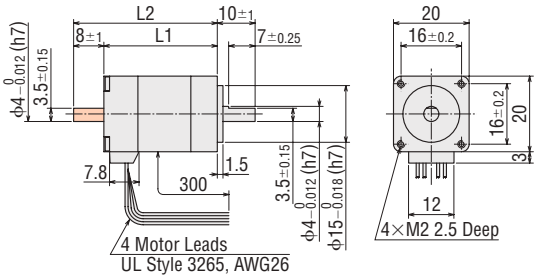

● These dimensions are for double shaft motors.
For single shaft motors, ignore the shaded ▭ areas.
● Back shaft of double shaft products have a flat the whole length.

Inner Wiring Diagram of Motor

Wiring Diagram No.: ⑤

● Refer to page 07-85 for inner wiring diagram of motor.

Standard Type with Encoder Frame Size 20 mm (Unipolar 5 lead wires)

Specifications

Product Name	Maximum Holding Torque N·m	Rotor Inertia J: kg·m^2	Rated Current A/Phase	Voltage VDC	Winding Resistance Ω/Phase	Inductance mH/Phase	Basic Step Angle	Recommended Driver Product Name*
PKP213U05A-R2EL	0.014	1.66×10^{-7}	0.5	4.25	8.5	2.9	1.8°	**CMD2109P**
PKP214U06A-R2EL	0.026	2.96×10^{-7}	0.6	4.2	7	2.4		

Refer to page 07-82 for encoder specifications.
*Refer to page 07-112 for details on the recommended driver.

Speed – Torque Characteristics (Reference values)

PKP213U05A-R2EL

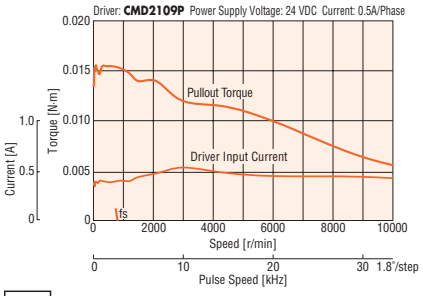

PKP214U06A-R2EL

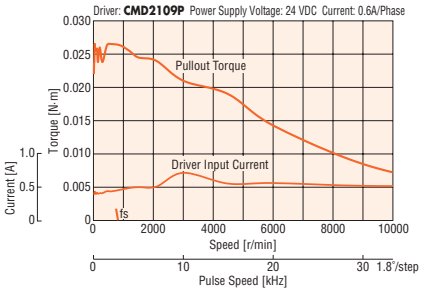

Note

- Data for the speed – torque characteristics is based on Oriental Motor's internal measurement conditions. If the conditions are changed, the characteristics may also change as a result.
- Depending on the driving conditions, a considerable amount of heat may be generated by the motor. To protect the encoder, be sure to keep the motor case temperature at 85°C max.

Dimensions (Unit: mm)

Motor

2D & 3D CAD

Product Name	L	Mass kg	2D CAD
PKP213U05A-R2EL	46.5	0.06	B1098
PKP214U06A-R2EL	56.5	0.08	B1099

Applicable Connector (Molex)

	Encoder
Connector Housing	51021-0800
Contact	50079-8100
Crimp Tool	57067-3000

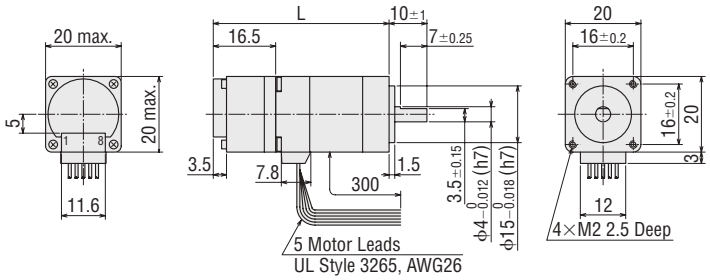

Connection Cable (Sold separately)

◇For Encoder

Product Name	Length L (m)
LCE08A-006	0.6

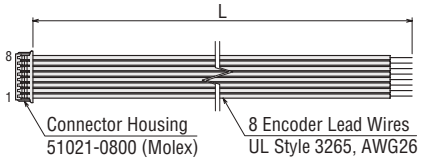

Inner Wiring Diagram of Motor

Wiring Diagram No.: ⑥

Refer to page 07-85 for inner wiring diagram of motor.

Standard Type with Encoder Frame Size 20 mm (Bipolar 4 lead wires)

Specifications

Product Name	Maximum Holding Torque N·m	Rotor Inertia J: kg·m^2	Rated Current A/Phase	Voltage VDC	Winding Resistance Ω/Phase	Inductance mH/Phase	Basic Step Angle	Recommended Driver Product Name*
PKP213D05A-R2EL	0.02	1.66×10^{-7}	0.5	4.25	8.5	4.1	1.8°	**CVD205BR-K**
PKP214D06A-R2EL	0.036	2.96×10^{-7}	0.6	3.9	6.5	3.5		**CVD206BR-K**

Refer to page 07-82 for encoder specifications.

*Refer to page 07-108 for details on the recommended driver.

Speed – Torque Characteristics (Reference values)

PKP213D05A-R2EL

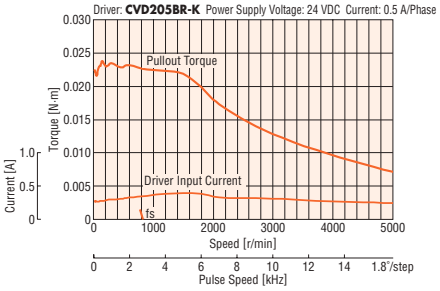

PKP214D06A-R2EL

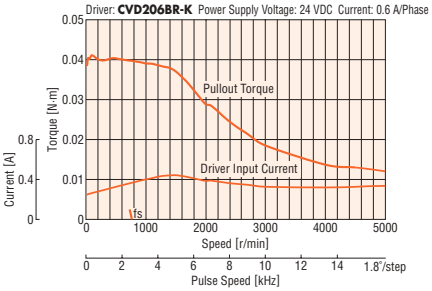

Note

- Data for the speed – torque characteristics is based on Oriental Motor's internal measurement conditions. If the conditions are changed, the characteristics may also change as a result.
- Depending on the driving conditions, a considerable amount of heat may be generated by the motor. To protect the encoder, be sure to keep the motor case temperature at 85°C max.

Dimensions (Unit: mm)

Motor

2D & 3D CAD

Product Name	L	Mass kg	2D CAD
PKP213D05A-R2EL	46.5	0.06	B1100
PKP214D06A-R2EL	56.5	0.08	B1101

Applicable Connector (Molex)

	Encoder
Connector Housing	51021-0800
Contact	50079-8100
Crimp Tool	57067-3000

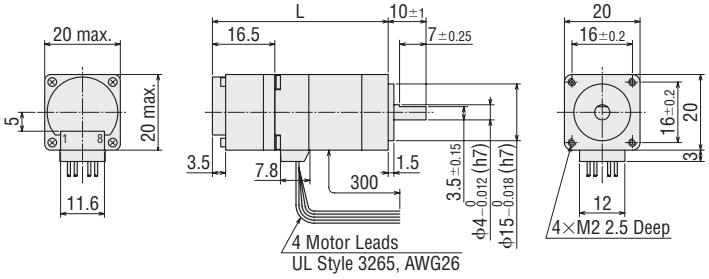

Connection Cable (Sold separately)

◇For Encoder

Product Name	Length L (m)
LCE08A-006	0.6

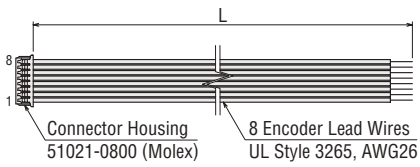

Inner Wiring Diagram of Motor

Wiring Diagram No.: ⑤

Refer to page 07-85 for inner wiring diagram of motor.

Standard Type Frame Size 28 mm (Unipolar 6 lead wires)

Specifications

Product Name	Maximum Holding Torque N·m	Rotor Inertia J: kg·m^2	Rated Current A/Phase	Voltage VDC	Winding Resistance Ω/Phase	Inductance mH/Phase	Basic Step Angle	Recommended Driver Product Name*
PKP223U09□2	0.075	9×10^{-7}	0.95	2.95	3.11	1.44	1.8°	**CMD2109P**
PKP225U09□2	0.135	18×10^{-7}		4.4	4.6	2.11		

●Either **A** (Single Shaft) or **B** (Double Shaft) indicating the configuration is specified where the box □ is located in the product name.
*Refer to page 07-112 for details on the recommended driver.

Speed – Torque Characteristics (Reference values)

PKP223U09A2/PKP223U09B2

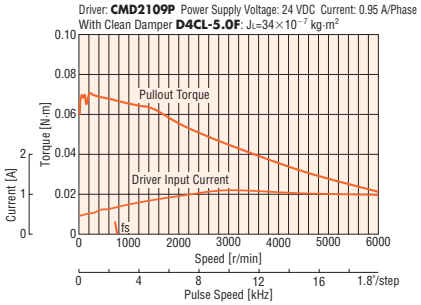

PKP225U09A2/PKP225U09B2

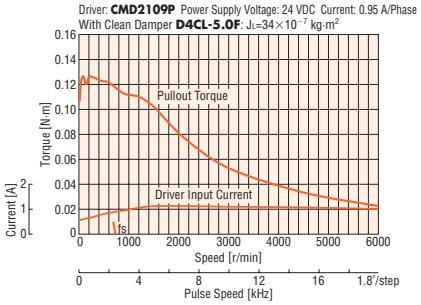

Note

●Data for the speed – torque characteristics is based on Oriental Motor's internal measurement conditions. If the conditions are changed, the characteristics may also change as a result.
●If there is a "clean damper" entry in the speed - torque characteristics, the data is for a double shaft motor when a clean damper is equipped.
●Depending on the driving conditions, a considerable amount of heat may be generated by the motor. Be sure to keep the motor case temperature at 100°C or less.

Dimensions (Unit: mm)

Motor

2D & 3D CAD

Product Name	L1	L2	Mass kg	2D CAD
PKP223U09A2	32	–	0.11	B980
PKP223U09B2		42		
PKP225U09A2	51.5	–	0.2	B982
PKP225U09B2		61.5		

●Applicable Connector
Connector Housing: 51065-0600 (Molex)
Contact: 50212-8100 (Molex)
Crimp Tool: 57176-5000 (Molex)

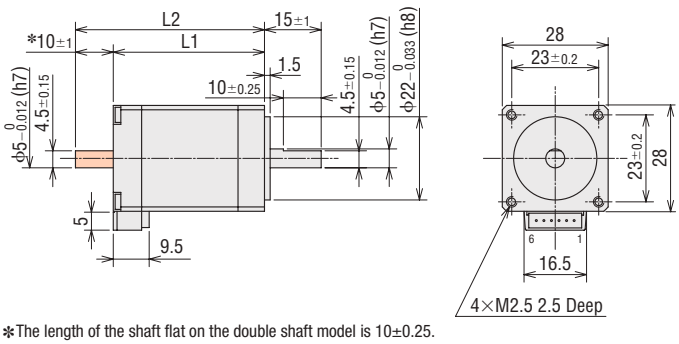

*The length of the shaft flat on the double shaft model is 10±0.25.
●These dimensions are for double shaft motors.
For single shaft motors, ignore the shaded ▭ areas.

Connection Cable (Sold separately)

◇For Motor

Product Name	Length L (m)
LC2U06A	0.6
LC2U10A	1

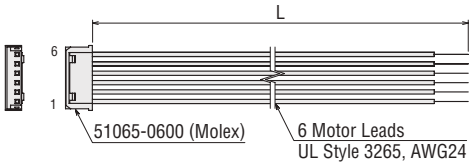

Inner Wiring Diagram of Motor

Wiring Diagram No.: ④
●Refer to page 07-85 for inner wiring diagram of motor.

Standard Type Frame Size 28 mm (Bipolar 4 lead wires)

Specifications

Product Name	Maximum Holding Torque N·m	Rotor Inertia J: kg·m^2	Rated Current A/Phase	Voltage VDC	Winding Resistance Ω/Phase	Inductance mH/Phase	Basic Step Angle	Recommended Driver Product Name*
PKP223D15□2	0.095	9×10^{-7}	1.5	1.77	1.18	0.96	1.8°	**CVD215BR-K**
PKP225D15□2	0.19	18×10^{-7}		3	2	1.6		

●Either **A** (Single Shaft) or **B** (Double Shaft) indicating the configuration is specified where the box □ is located in the product name.
*Refer to page 07-108 for details on the recommended driver.

Speed – Torque Characteristics (Reference values)

PKP223D15A2/PKP223D15B2

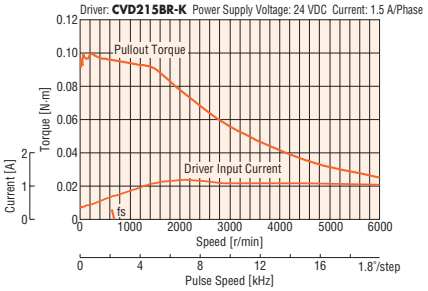

PKP225D15A2/PKP225D15B2

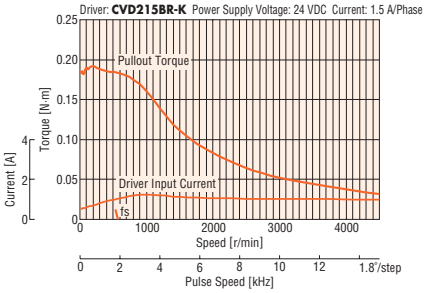

Note

●Data for the speed – torque characteristics is based on Oriental Motor's internal measurement conditions. If the conditions are changed, the characteristics may also change as a result.
●Depending on the driving conditions, a considerable amount of heat may be generated by the motor. Be sure to keep the motor case temperature at 100°C or less.

Dimensions (Unit: mm)

Motor

2D & 3D CAD

Product Name	L1	L2	Mass kg	2D CAD
PKP223D15A2	32	–	0.11	B980
PKP223D15B2		42		
PKP225D15A2	51.5	–	0.2	B982
PKP225D15B2		61.5		

●Applicable Connector
Connector Housing: 51065-0600 (Molex)
Contact: 50212-8100 (Molex)
Crimp Tool: 57176-5000 (Molex)

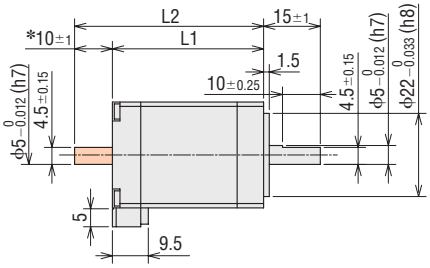

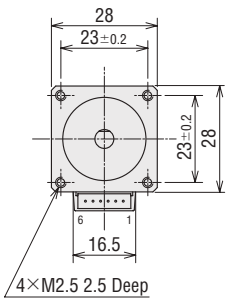

*The length of the shaft flat on the double shaft model is 10±0.25.
●These dimensions are for double shaft motors.
For single shaft motors, ignore the shaded ▭ areas.

Connection Cable (Sold separately)

◇For Motor

Product Name	Length L (m)
LC2B06A	0.6

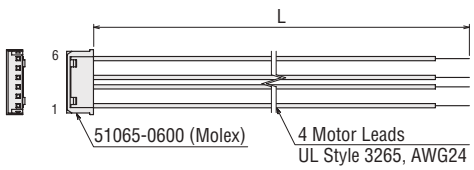

Inner Wiring Diagram of Motor

Wiring Diagram No.: ③
●Refer to page 07-85 for inner wiring diagram of motor.

Standard Type with Encoder Frame Size 28 mm (Unipolar 6 lead wires)

Specifications

Product Name	Maximum Holding Torque N·m	Rotor Inertia J: kg·m^2	Rated Current A/Phase	Voltage VDC	Winding Resistance Ω/Phase	Inductance mH/Phase	Basic Step Angle	Recommended Driver Product Name*
PKP223U09A2-R2EL	0.075	9×10^{-7}	0.95	2.95	3.11	1.44	1.8°	**CMD2109P**
PKP225U09A2-R2EL	0.135	18×10^{-7}		4.4	4.6	2.11		

● Refer to page 07-82 for encoder specifications.

*Refer to page 07-112 for details on the recommended driver.

Speed – Torque Characteristics (Reference values)

PKP223U09A2-R2EL

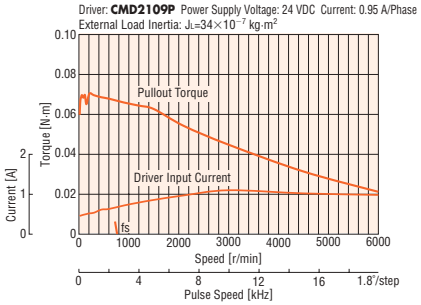

PKP225U09A2-R2EL

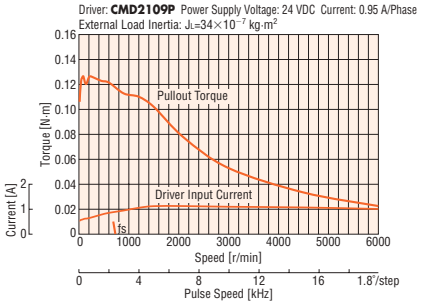

Note

● Data for the speed – torque characteristics is based on Oriental Motor's internal measurement conditions. If the conditions are changed, the characteristics may also change as a result.

● The data in the speed - torque characteristics represents the use of an external load inertia.

● Depending on the driving conditions, a considerable amount of heat may be generated by the motor. To protect the encoder, be sure to keep the motor case temperature at 85°C max.

Dimensions (Unit: mm)

Motor

2D & 3D CAD

Product Name	L	Mass kg	2D CAD
PKP223U09A2-R2EL	47.5	0.12	B1198
PKP225U09A2-R2EL	67	0.21	B1199

● Applicable Connector (Molex)

	Motor	Encoder
Connector Housing	51065-0600	51021-0800
Contact	50212-8100	50079-8100
Crimp Tool	57176-5000	57067-3000

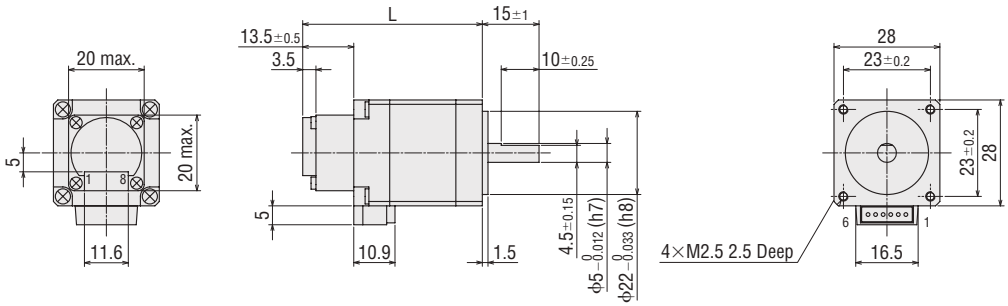

Connection Cable (Sold separately)

◇For Motor

Product Name	Length L (m)
LC2U06A	0.6
LC2U10A	1

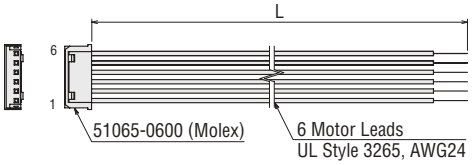

◇For Encoder

Product Name	Length L (m)
LCE08A-006	0.6

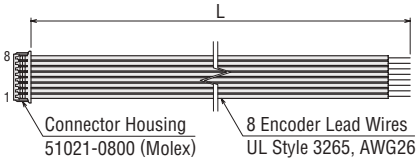

Inner Wiring Diagram of Motor

Wiring Diagram No.: ④

● Refer to page 07-85 for inner wiring diagram of motor.

Standard Type with Encoder Frame Size 28 mm (Bipolar 4 lead wires)

Specifications

Product Name	Maximum Holding Torque N·m	Rotor Inertia J: kg·m^2	Rated Current A/Phase	Voltage VDC	Winding Resistance Ω/Phase	Inductance mH/Phase	Basic Step Angle	Recommended Driver Product Name*
PKP223D15A2-R2EL	0.095	9×10^{-7}	1.5	1.77	1.18	0.96	1.8°	**CVD215BR-K**
PKP225D15A2-R2EL	0.19	18×10^{-7}		3	2	1.6		

● Refer to page 07-82 for encoder specifications.
* Refer to page 07-108 for details on the recommended driver.

Speed – Torque Characteristics (Reference values)

PKP223D15A2-R2EL

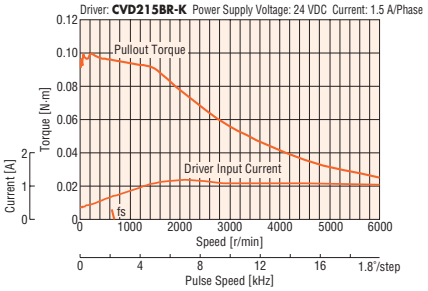

PKP225D15A2-R2EL

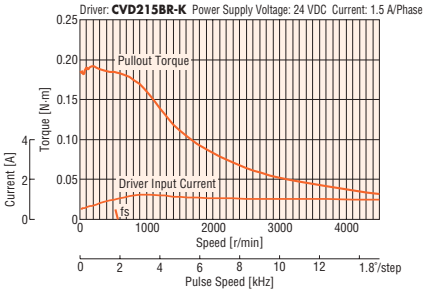

Note

● Data for the speed – torque characteristics is based on Oriental Motor's internal measurement conditions. If the conditions are changed, the characteristics may also change as a result.
● Depending on the driving conditions, a considerable amount of heat may be generated by the motor. To protect the encoder, be sure to keep the motor case temperature at 85°C max.

Dimensions (Unit: mm)

Motor

2D & 3D CAD

Product Name	L	Mass kg	2D CAD
PKP223D15A2-R2EL	47.5	0.12	B1198
PKP225D15A2-R2EL	67	0.21	B1199

● Applicable Connector (Molex)

	Motor	Encoder
Connector Housing	51065-0600	51021-0800
Contact	50212-8100	50079-8100
Crimp Tool	57176-5000	57067-3000

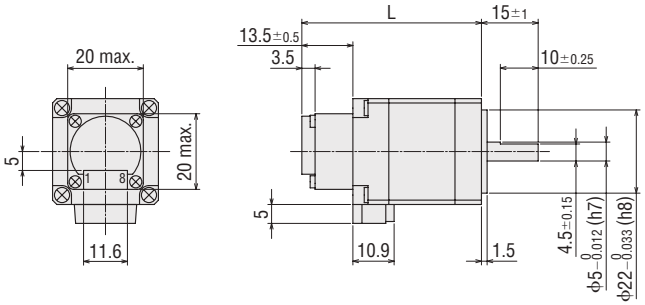

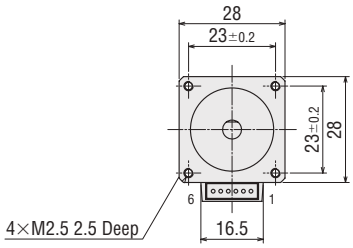

Inner Wiring Diagram of Motor

Wiring Diagram No.: ③

● Refer to page 07-85 for inner wiring diagram of motor.

Connection Cable (Sold separately)

◇For Motor

Product Name	Length L (m)
LC2B06A	0.6

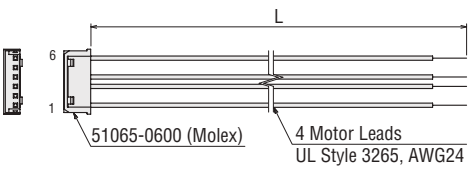

◇For Encoder

Product Name	Length L (m)
LCE08A-006	0.6

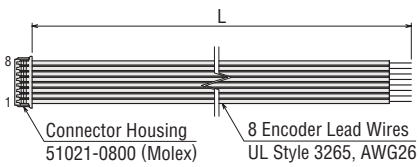

Standard Type with Electromagnetic Brake
Frame Size 28 mm (Unipolar 6 lead wires)

Specifications

Product Name	Maximum Holding Torque N·m	Rotor Inertia J: kg·m^2	Rated Current A/Phase	Voltage VDC	Winding Resistance Ω/Phase	Inductance mH/Phase	Basic Step Angle
PKP223U09M2	0.075	14×10^{-7}	0.95	2.95	3.11	1.44	1.8°
PKP225U09M2	0.135	23×10^{-7}		4.4	4.6	2.11	

Refer to page 07-82 for electromagnetic brake specifications.

Speed – Torque Characteristics (Reference values)

PKP223U09M2

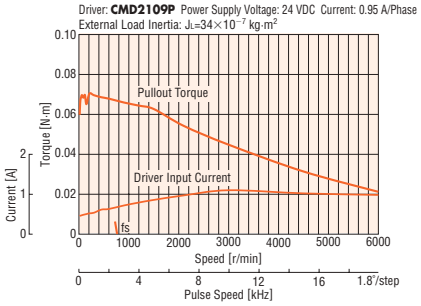

PKP225U09M2

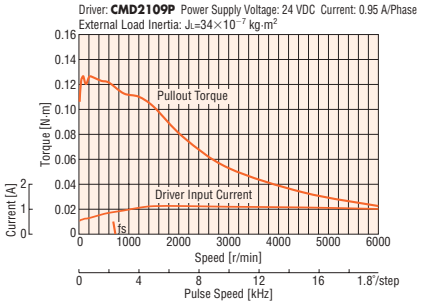

Note

- Data for the speed – torque characteristics is based on Oriental Motor's internal measurement conditions. If the conditions are changed, the characteristics may also change as a result.
- The data in the speed - torque characteristics represents the use of an external load inertia.
- Depending on the driving conditions, a considerable amount of heat may be generated by the motor. Be sure to keep the motor case temperature at 100°C or less.

Dimensions (Unit: mm)

Motor

2D & 3D CAD

Product Name	L	Mass kg	2D CAD
PKP223U09M2	65.5	0.17	B1196
PKP225U09M2	85	0.26	B1197

- Applicable Connector
  Connector Housing: 51065-0600 (Molex)
  Contact: 50212-8100 (Molex)
  Crimp Tool: 57176-5000 (Molex)

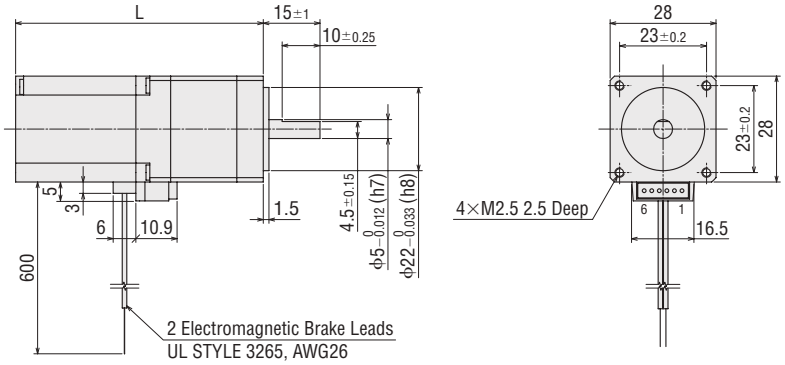

Connection Cable (Sold separately)

◇For Motor

Product Name	Length L (m)
LC2U06A	0.6
LC2U10A	1

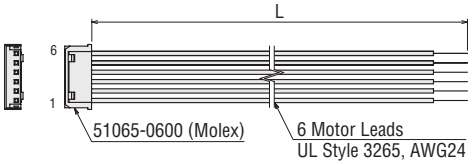

Inner Wiring Diagram of Motor

Wiring Diagram No.: ④

Refer to page 07-85 for inner wiring diagram of motor.

Standard Type with Electromagnetic Brake
Frame Size 28 mm (Bipolar 4 lead wires)

Specifications

Product Name	Maximum Holding Torque N·m	Rotor Inertia J: kg·m^2	Rated Current A/Phase	Voltage VDC	Winding Resistance Ω/Phase	Inductance mH/Phase	Basic Step Angle
PKP223D15M2	0.095	14×10^{-7}	1.5	1.77	1.18	0.96	1.8°
PKP225D15M2	0.19	23×10^{-7}		3	2	1.6	

Refer to page 07-82 for electromagnetic brake specifications.

Speed – Torque Characteristics (Reference values)

PKP223D15M2

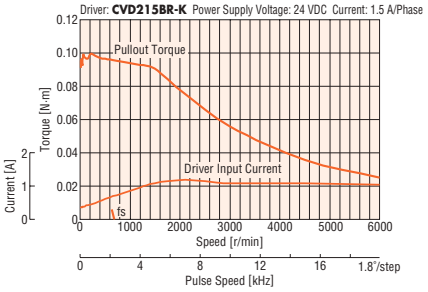

PKP225D15M2

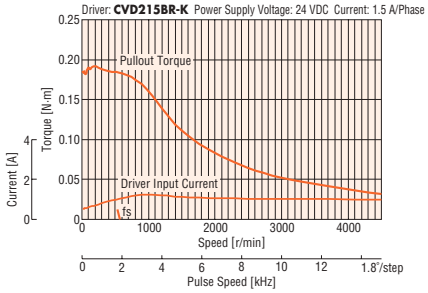

Note

- Data for the speed – torque characteristics is based on Oriental Motor's internal measurement conditions. If the conditions are changed, the characteristics may also change as a result.
- Depending on the driving conditions, a considerable amount of heat may be generated by the motor. Be sure to keep the motor case temperature at 100°C or less.

Dimensions (Unit: mm)

Motor

2D & 3D CAD

Product Name	L	Mass kg	2D CAD
PKP223D15M2	65.5	0.17	B1196
PKP225D15M2	85	0.26	B1197

- Applicable Connector
  Connector Housing: 51065-0600 (Molex)
  Contact: 50212-8100 (Molex)
  Crimp Tool: 57176-5000 (Molex)

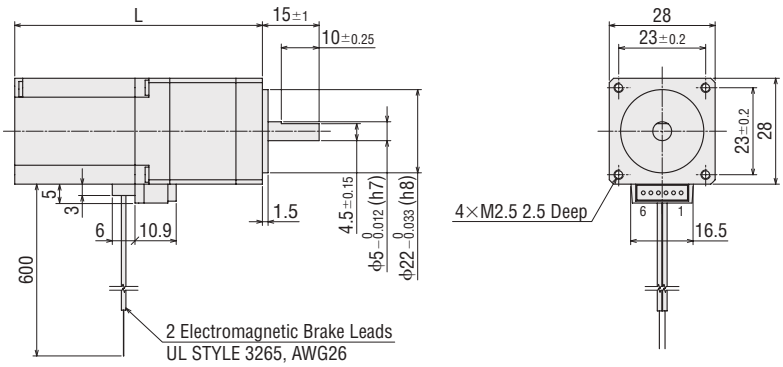

Connection Cable (Sold separately)

◇For Motor

Product Name	Length L (m)
LC2B06A	0.6

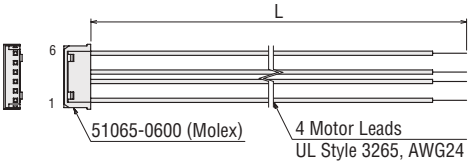

Inner Wiring Diagram of Motor

Wiring Diagram No.: ③

Refer to page 07-85 for inner wiring diagram of motor.

Standard Type Frame Size 35 mm (Unipolar 6 lead wires)

Specifications

Product Name	Maximum Holding Torque N·m	Rotor Inertia J: kg·m^2	Rated Current A/Phase	Voltage VDC	Winding Resistance Ω/Phase	Inductance mH/Phase	Basic Step Angle	Recommended Driver Product Name*
PKP233U12□	0.16	24×10^{-7}	1.2	3.24	2.7	1.4	1.8°	**CMD2112P**
PKP235U12□	0.3	50×10^{-7}		4.08	3.4	2		

● Either **A** (Single Shaft) or **B** (Double Shaft) indicating the configuration is specified where the box □ is located in the product name.

*Refer to page 07-112 for details on the recommended driver.

Speed – Torque Characteristics (Reference values)

PKP233U12A/PKP233U12B

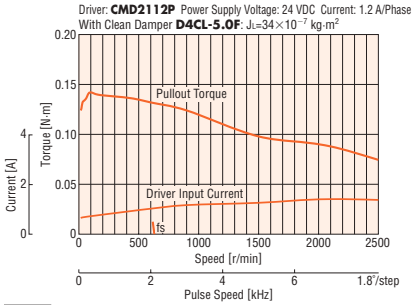

PKP235U12A/PKP235U12B

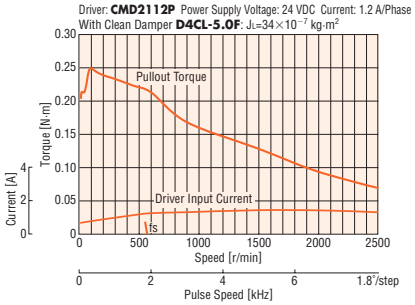

Note

● Data for the speed – torque characteristics is based on Oriental Motor's internal measurement conditions. If the conditions are changed, the characteristics may also change as a result.

● If there is a "clean damper" entry in the speed - torque characteristics, the data is for a double shaft motor when a clean damper is equipped.

● Depending on the driving conditions, a considerable amount of heat may be generated by the motor. Be sure to keep the motor case temperature at 100°C or less.

Dimensions (Unit: mm)

Motor

2D & 3D CAD

Product Name	L1	L2	Mass kg	2D CAD
PKP233U12A	37	–	0.18	B983
PKP233U12B		52		
PKP235U12A	52	–	0.285	B984
PKP235U12B		67		

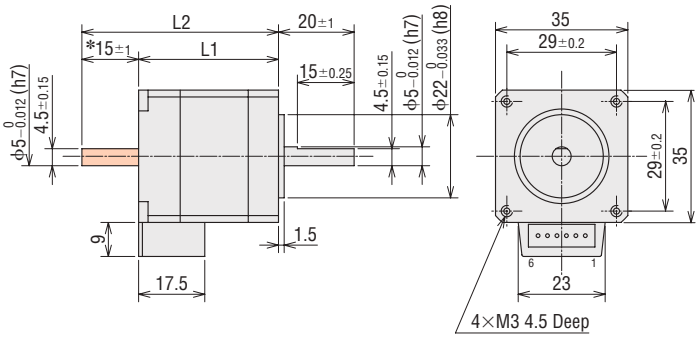

*The length of the shaft flat on the double shaft model is 15±0.25.

● These dimensions are for double shaft motors.
For single shaft motors, ignore the shaded ▭ areas.

● Applicable Connector
Connector Housing: 51103-0600 (Molex)
Contact: 50351-8100 (Molex)
Crimp Tool: 57295-5000 (Molex)

Connection Cable (Sold separately)

◇For Motor

Product Name	Length L (m)
LC2U06B	0.6
LC2U10B	1

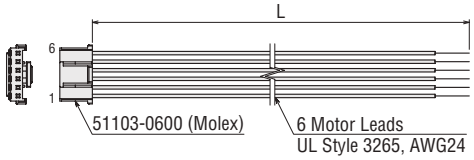

Inner Wiring Diagram of Motor

Wiring Diagram No.: ④

● Refer to page 07-85 for inner wiring diagram of motor.

Standard Type Frame Size 35 mm (Bipolar 4 lead wires)

Specifications

Product Name	Maximum Holding Torque N·m	Rotor Inertia J: kg·m^2	Rated Current A/Phase	Voltage VDC	Winding Resistance Ω/Phase	Inductance mH/Phase	Basic Step Angle	Recommended Driver Product Name*
PKP233D15□	0.2	24×10^{-7}	1.5	2.43	1.62	1.5	1.8°	**CVD215BR-K**
PKP233D23□			2.3	1.56	0.68	0.67		**CVD223BR-K**
PKP235D15□	0.37	50×10^{-7}	1.5	3.6	2.4	2.6		**CVD215BR-K**
PKP235D23□			2.3	2.23	0.97	1.2		**CVD223BR-K**

● Either **A** (Single Shaft) or **B** (Double Shaft) indicating the configuration is specified where the box □ is located in the product name.
*Refer to page 07-108 for details on the recommended driver.

Speed – Torque Characteristics (Reference values)

PKP233D15A/PKP233D15B

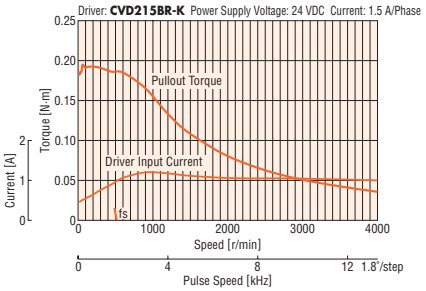

PKP235D15A/PKP235D15B

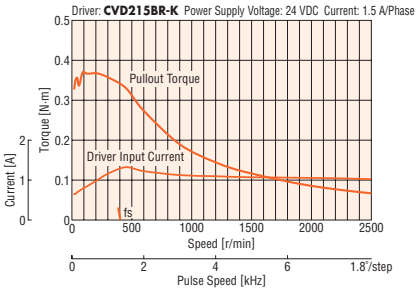

PKP233D23A/PKP233D23B

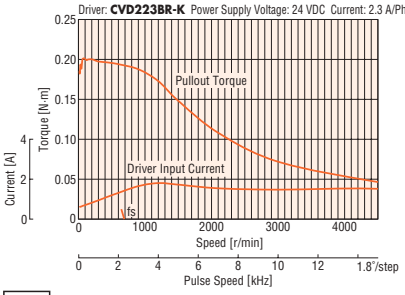

PKP235D23A/PKP235D23B

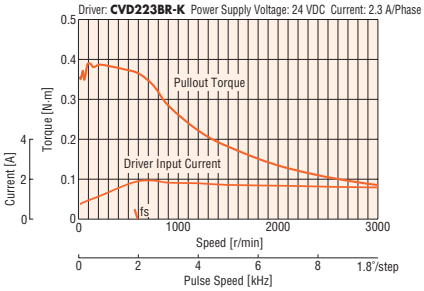

Note

● Data for the speed – torque characteristics is based on Oriental Motor's internal measurement conditions. If the conditions are changed, the characteristics may also change as a result.
● Depending on the driving conditions, a considerable amount of heat may be generated by the motor. Be sure to keep the motor case temperature at 100°C or less.

Dimensions (Unit: mm)

Motor

2D & 3D CAD

Product Name	L1	L2	Mass kg	2D CAD
PKP233D15A	37	–	0.18	B983
PKP233D15B		52		
PKP233D23A		–		B1111
PKP233D23B		52		
PKP235D15A	52	–	0.285	B984
PKP235D15B		67		
PKP235D23A		–		B1112
PKP235D23B		67		

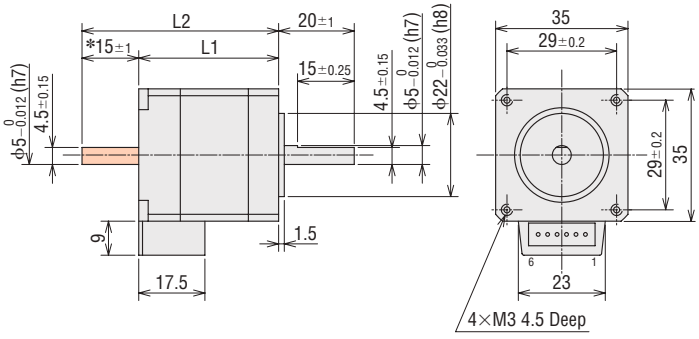

*The length of the shaft flat on the double shaft model is 15±0.25.
● These dimensions are for double shaft motors.
For single shaft motors, ignore the shaded ▭ areas.

● Applicable Connector
Connector Housing: 51103-0600 (Molex)
Contact: 50351-8100 (Molex)
Crimp Tool: 57295-5000 (Molex)

Connection Cable (Sold separately)

◇For Motor

Product Name	Length L (m)
LC2B06B	0.6

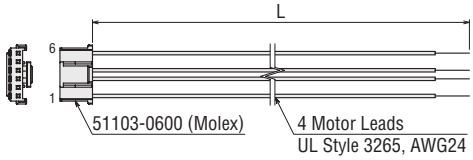

Inner Wiring Diagram of Motor

Wiring Diagram No.: ③
● Refer to page 07-85 for inner wiring diagram of motor.

Standard Type with Encoder Frame Size 35 mm (Unipolar 6 lead wires)

Specifications

Product Name	Maximum Holding Torque N·m	Rotor Inertia J: kg·m^2	Rated Current A/Phase	Voltage VDC	Winding Resistance Ω/Phase	Inductance mH/Phase	Basic Step Angle	Recommended Driver Product Name*
PKP233U12A-R2EL	0.16	24×10^{-7}	1.2	3.24	2.7	1.4	1.8°	**CMD2112P**
PKP235U12A-R2EL	0.3	50×10^{-7}		4.08	3.4	2		

● Refer to page 07-82 for encoder specifications.
* Refer to page 07-112 for details on the recommended driver.

Speed – Torque Characteristics (Reference values)

PKP233U12A-R2EL

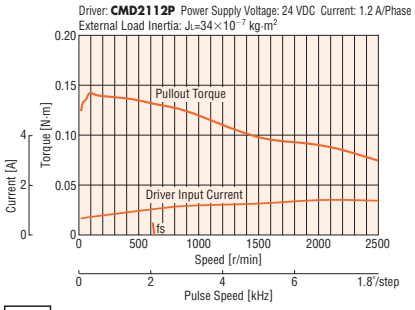

PKP235U12A-R2EL

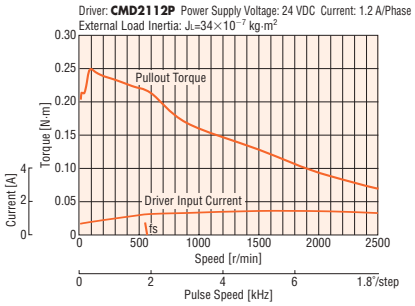

Note

● Data for the speed – torque characteristics is based on Oriental Motor's internal measurement conditions. If the conditions are changed, the characteristics may also change as a result.
● The data in the speed – torque characteristics represents the use of an external load inertia.
● Depending on the driving conditions, a considerable amount of heat may be generated by the motor. To protect the encoder, be sure to keep the motor case temperature at 85°C max.

Dimensions (Unit: mm)

Motor

2D & 3D CAD

Product Name	L	Mass kg	2D CAD
PKP233U12A-R2EL	50.5	0.19	B1102
PKP235U12A-R2EL	65.5	0.295	B1103

● Applicable Connector (Molex)

	Motor	Encoder
Connector Housing	51103-0600	51021-0800
Contact	50351-8100	50079-8100
Crimp Tool	57295-5000	57067-3000

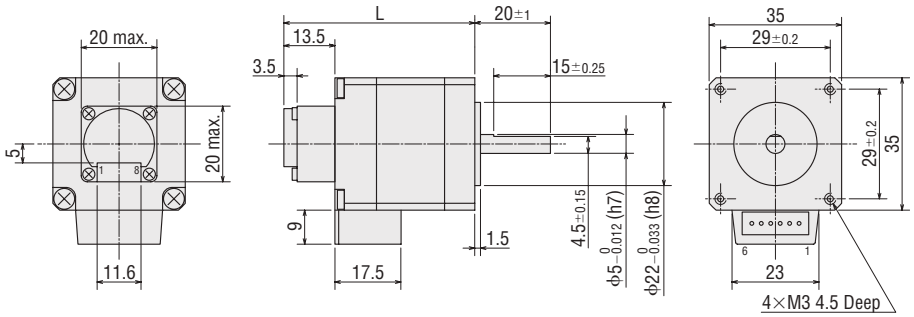

Connection Cable (Sold separately)

◇For Motor

Product Name	Length L (m)
LC2U06B	0.6
LC2U10B	1

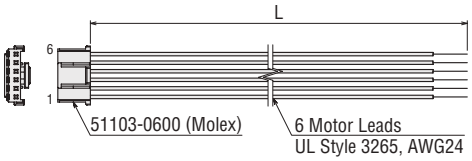

◇For Encoder

Product Name	Length L (m)
LCE08A-006	0.6

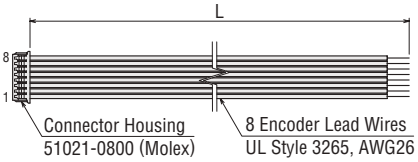

Inner Wiring Diagram of Motor

Wiring Diagram No.: ④

● Refer to page 07-85 for inner wiring diagram of motor.

Standard Type with Encoder Frame Size 35 mm (Bipolar 4 lead wires)

Specifications

Product Name	Maximum Holding Torque N·m	Rotor Inertia J: kg·m^2	Rated Current A/Phase	Voltage VDC	Winding Resistance Ω/Phase	Inductance mH/Phase	Basic Step Angle	Recommended Driver Product Name*
PKP233D15A-R2EL	0.2	24×10^{-7}	1.5	2.43	1.62	1.5	1.8°	**CVD215BR-K**
PKP235D15A-R2EL	0.37	50×10^{-7}		3.6	2.4	2.6		

● Refer to page 07-82 for encoder specifications.
*Refer to page 07-108 for details on the recommended driver.

Speed – Torque Characteristics (Reference values)

PKP233D15A-R2EL

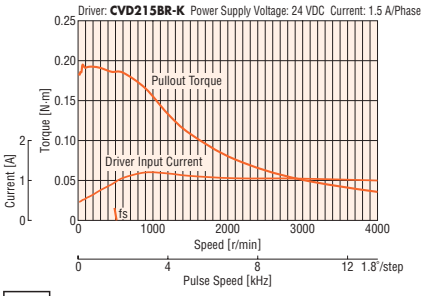

PKP235D15A-R2EL

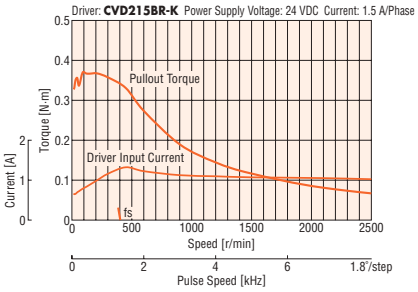

Note
● Data for the speed – torque characteristics is based on Oriental Motor's internal measurement conditions. If the conditions are changed, the characteristics may also change as a result.
● Depending on the driving conditions, a considerable amount of heat may be generated by the motor. To protect the encoder, be sure to keep the motor case temperature at 85°C max.

Dimensions (Unit: mm)

Motor

2D & 3D CAD

Product Name	L	Mass kg	2D CAD
PKP233D15A-R2EL	50.5	0.19	B1102
PKP235D15A-R2EL	65.5	0.295	B1103

● Applicable Connector (Molex)

	Motor	Encoder
Connector Housing	51103-0600	51021-0800
Contact	50351-8100	50079-8100
Crimp Tool	57295-5000	57067-3000

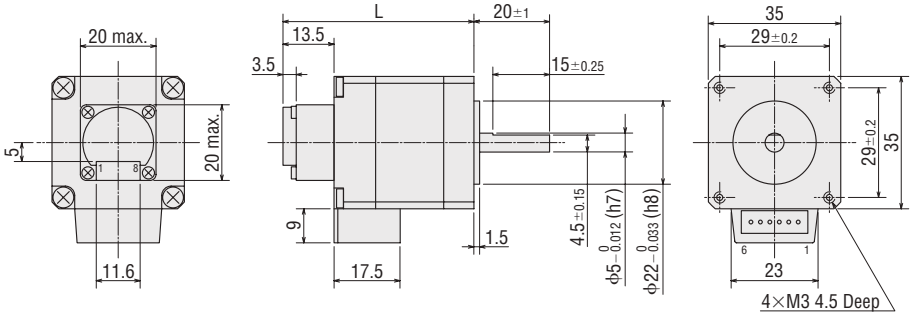

Connection Cable (Sold separately)

◇For Motor

Product Name	Length L (m)
LC2B06B	0.6

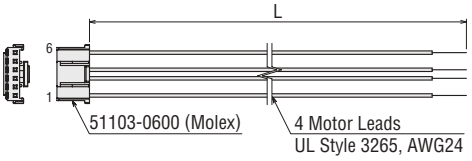

◇For Encoder

Product Name	Length L (m)
LCE08A-006	0.6

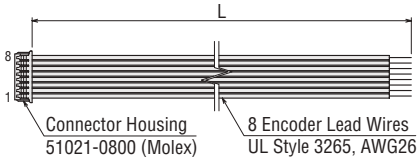

Inner Wiring Diagram of Motor

Wiring Diagram No.: ③
● Refer to page 07-85 for inner wiring diagram of motor.

Standard Type with Electromagnetic Brake
Frame Size 35 mm (Unipolar 6 lead wires)

Specifications

Product Name	Maximum Holding Torque N·m	Rotor Inertia J: kg·m^2	Rated Current A/Phase	Voltage VDC	Winding Resistance Ω/Phase	Inductance mH/Phase	Basic Step Angle	Electromagnetic brake Static friction torque N·m
PKP233U12M	0.16	36×10^{-7}	1.2	3.24	2.7	1.4	1.8°	0.3
PKP235U12M	0.3	62×10^{-7}		4.08	3.4	2		

Refer to page 07-82 for electromagnetic brake specifications.

Speed – Torque Characteristics (Reference values)

PKP233U12M

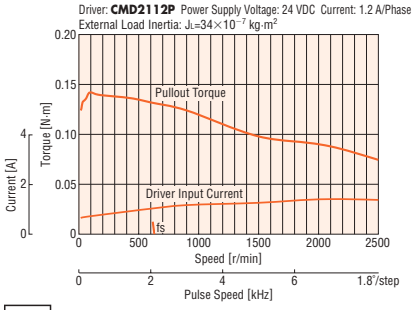

PKP235U12M

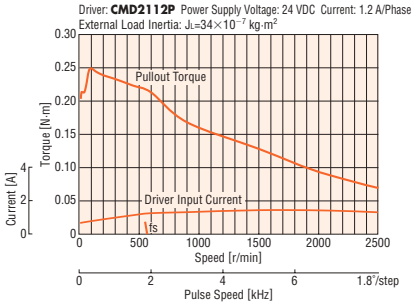

Note

- Data for the speed – torque characteristics is based on Oriental Motor's internal measurement conditions. If the conditions are changed, the characteristics may also change as a result.
- The data in the speed - torque characteristics represents the use of an external load inertia.
- Depending on the driving conditions, a considerable amount of heat may be generated by the motor. Be sure to keep the motor case temperature at 100°C or less.

Dimensions (Unit: mm)

Motor

2D & 3D CAD

Product Name	L	Mass kg	2D CAD
PKP233U12M	71	0.285	B1134
PKP235U12M	86	0.39	B1135

- Applicable Connector (Molex)
  Connector Housing: 51103-0600
  Contact: 50351-8100
  Crimp Tool: 57295-5000

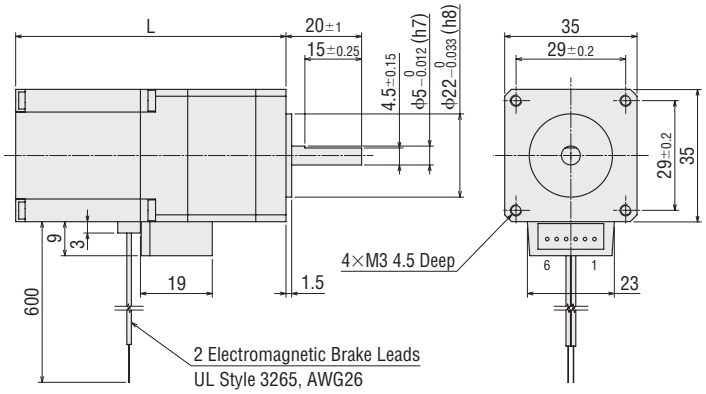

Connection Cable (Sold separately)

◇For Motor

Product Name	Length L (m)
LC2U06B	0.6
LC2U10B	1

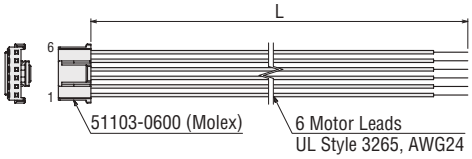

Inner Wiring Diagram of Motor

Wiring Diagram No.: ④

Refer to page 07-85 for inner wiring diagram of motor.

Standard Type with Electromagnetic Brake
Frame Size 35 mm (Bipolar 4 lead wires)

Specifications

Product Name	Maximum Holding Torque N·m	Rotor Inertia J: kg·m^2	Rated Current A/Phase	Voltage VDC	Winding Resistance Ω/Phase	Inductance mH/Phase	Basic Step Angle	Electromagnetic brake Static friction torque N·m
PKP233D15M	0.2	36×10^{-7}	1.5	2.43	1.62	1.5	1.8°	0.3
PKP235D15M	0.37	62×10^{-7}		3.6	2.4	2.6		

Refer to page 07-82 for electromagnetic brake specifications.

Speed – Torque Characteristics (Reference values)

PKP233D15M

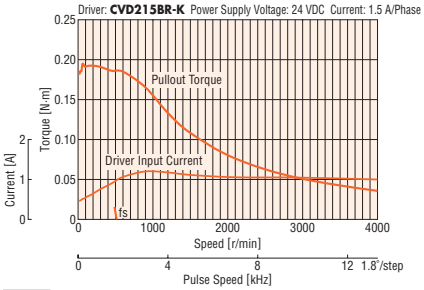

PKP235D15M

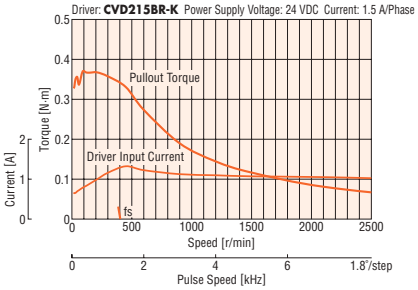

Note

- Data for the speed – torque characteristics is based on Oriental Motor's internal measurement conditions. If the conditions are changed, the characteristics may also change as a result.
- Depending on the driving conditions, a considerable amount of heat may be generated by the motor. Be sure to keep the motor case temperature at 100°C or less.

Dimensions (Unit: mm)

Motor

2D & 3D CAD

Product Name	L	Mass kg	2D CAD
PKP233D15M	71	0.285	B1134
PKP235D15M	86	0.39	B1135

- Applicable Connector (Molex)
  Connector Housing: 51103-0600
  Contact: 50351-8100
  Crimp Tool: 57295-5000

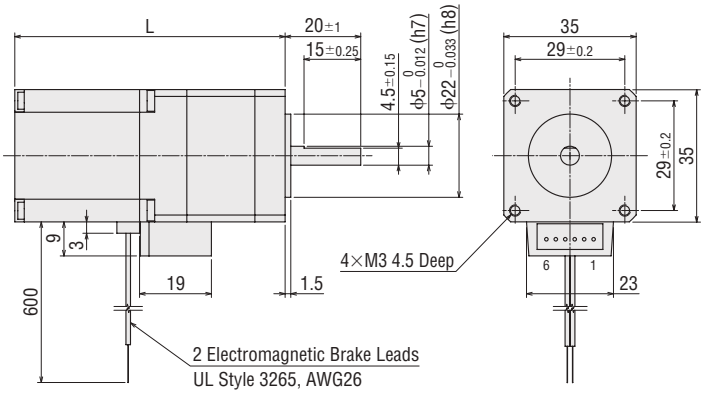

Connection Cable (Sold separately)

◇For Motor

Product Name	Length L (m)
LC2B06B	0.6

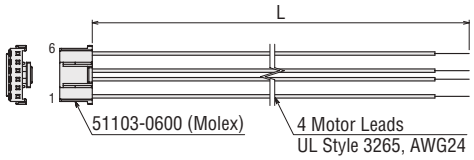

Inner Wiring Diagram of Motor

Wiring Diagram No.: ③

Refer to page 07-85 for inner wiring diagram of motor.

Click Here
For more information, please visit ORIENTAL MOTOR Website:
https://www.orientalmotor.com.sg/om/tp/index.html

Standard Type Frame Size 42 mm (Unipolar 5 lead wires)

Specifications

Product Name	Maximum Holding Torque N·m	Rotor Inertia J: kg·m^2	Rated Current A/Phase	Voltage VDC	Winding Resistance Ω/Phase	Inductance mH/Phase	Basic Step Angle	Recommended Driver Product Name*
PKP243U08□2 NEW	0.26	36×10^{-7}	0.8	5.3	6.6	5.3	1.8°	**CMD2109P**
PKP243U09□2			0.95	4.5	4.7	3.7		**CMD2109P**
PKP243U12□2 NEW			1.2	3.2	2.7	2.4		**CMD2112P**
PKP244U08□2 NEW	0.39	54×10^{-7}	0.8	7.1	8.9	8.4		**CMD2109P**
PKP244U12□2			1.2	4.8	4	3.7		**CMD2112P**
PKP245U08□2 NEW	0.49	73×10^{-7}	0.8	6.4	8	8.3		**CMD2109P**
PKP245U12□2			1.2	3.8	3.2	3.7		**CMD2112P**
PKP246U12□2	0.75	110×10^{-7}	1.2	6.1	5.1	6		**CMD2112P**
PKP246U16□2 NEW			1.6	4.5	2.8	3.3		**CMD2120P**

● Either **A** (Single Shaft) or **B** (Double Shaft) indicating the configuration is specified where the box □ is located in the product name.
*Refer to page 07-112 for details on the recommended driver.

Speed – Torque Characteristics (Reference values)

PKP243U08A2/PKP243U08B2

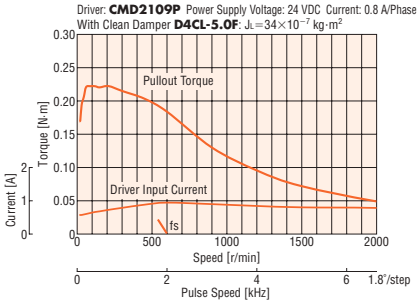

PKP243U09A2/PKP243U09B2

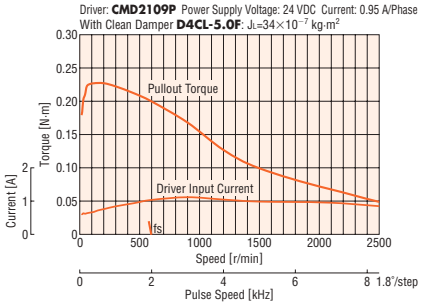

PKP243U12A2/PKP243U12B2

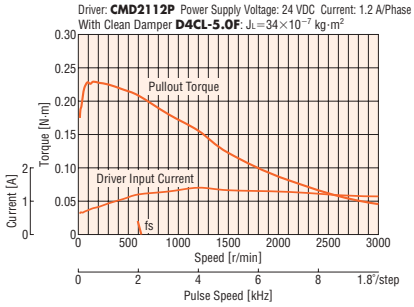

PKP244U08A2/PKP244U08B2

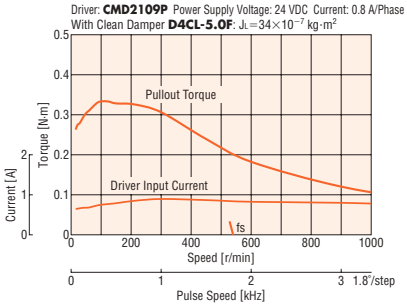

PKP244U12A2/PKP244U12B2

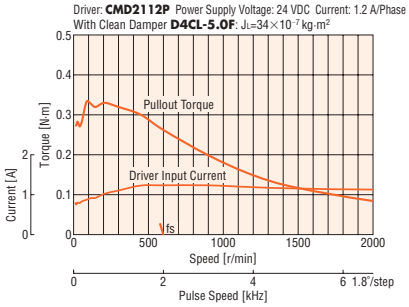

PKP245U08A2/PKP245U08B2

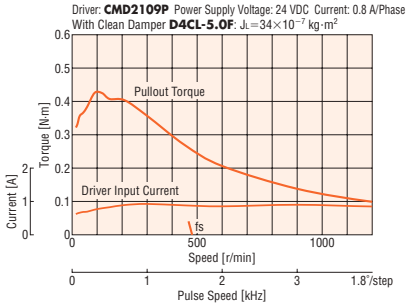

PKP245U12A2/PKP245U12B2

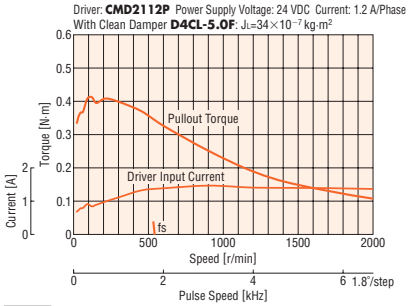

PKP246U12A2/PKP246U12B2

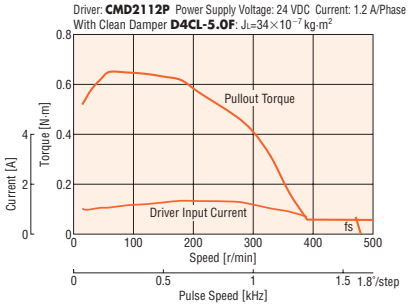

PKP246U16A2/PKP246U16B2

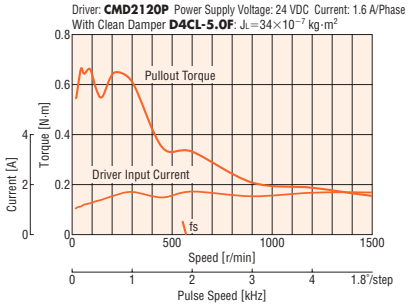

Note

● Data for the speed – torque characteristics is based on Oriental Motor's internal measurement conditions. If the conditions are changed, the characteristics may also change as a result.
● If there is a "clean damper" entry in the speed – torque characteristics, the data is for a double shaft motor when a clean damper is equipped.
● Depending on the driving conditions, a considerable amount of heat may be generated by the motor. Be sure to keep the motor case temperature at 100°C or less.
● Set the driver current to be less than or equal to the rated current of the motor.

Dimensions (Unit: mm)

Motor

2D & 3D CAD

Product Name	L1	L2	Mass kg	2D CAD
PKP243U08A2	33	–	0.23	B1335
PKP243U08B2		48		
PKP243U09A2		–		
PKP243U09B2		48		
PKP243U12A2		–		
PKP243U12B2		48		
PKP244U08A2	39	–	0.3	B1336
PKP244U08B2		54		
PKP244U12A2		–		
PKP244U12B2		54		
PKP245U08A2	47	–	0.37	B1337
PKP245U08B2		62		
PKP245U12A2		–		
PKP245U12B2		62		
PKP246U12A2	59	–	0.5	B1338
PKP246U12B2		74		
PKP246U16A2		–		
PKP246U16B2		74		

● Applicable Connector
Connector Housing: MDF97-5S-3.5C (HIROSE ELECTRIC CO., LTD.)
Contact: MDF97-22SC (HIROSE ELECTRIC CO., LTD.)
Crimp Tool: HT801/MDF97-22S (HIROSE ELECTRIC CO., LTD.)

Connection Cable (Sold separately)

◇For Motor

Product Name	Length L (m)
LC2U06E	0.6

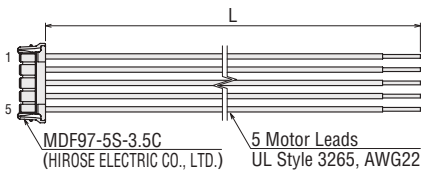

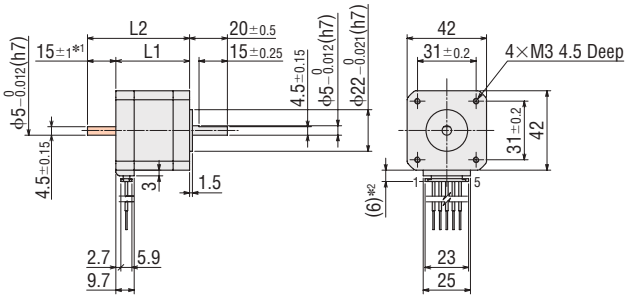

*1 The length of the shaft flat on the double shaft model is 15±0.25.
*2 With connection cable
● These dimensions are for double shaft motors.
For single shaft motors, ignore the shaded ▭ areas.

Inner Wiring Diagram of Motor

Wiring Diagram No.: ②

● Refer to page 07-85 for inner wiring diagram of motor.

Click Here
For more information, please visit ORIENTAL MOTOR Website:
https://www.orientalmotor.com.sg/om/tp/index.html

Standard Type Frame Size 42 mm (Bipolar 4 lead wires)

Specifications

Product Name	Maximum Holding Torque N·m	Rotor Inertia J: kg·m^2	Rated Current A/Phase	Voltage VDC	Winding Resistance Ω/Phase	Inductance mH/Phase	Basic Step Angle	Recommended Driver Product Name*
PKP243D08□2 NEW	0.35	36×10^{-7}	0.85	4.6	5.4	10	1.8°	**CVD223FBR-K**
PKP243D15□2			1.5	2.7	1.8	3.3		
PKP243D23□2			2.3	1.8	0.78	1.4		
PKP244D08□2 NEW	0.48	54×10^{-7}	0.85	5.7	6.7	14		
PKP244D15□2			1.5	3.2	2.1	4.4		
PKP244D23□2			2.3	2.1	0.93	1.9		
PKP245D08□2 NEW	0.66	73×10^{-7}	0.85	6	7.1	16		
PKP245D15□2			1.5	3.3	2.2	5.3		
PKP245D23□2			2.3	2.3	1	2.2		
PKP246D15□2	0.99	110×10^{-7}	1.5	4.4	2.9	7.9		
PKP246D23□2			2.3	3.2	1.4	3.3		

● Either **A** (Single Shaft) or **B** (Double Shaft) indicating the configuration is specified where the box □ is located in the product name.
*Refer to page 07-108 for details on the recommended driver.

Speed – Torque Characteristics (Reference values)

PKP243D08A2/PKP243D08B2

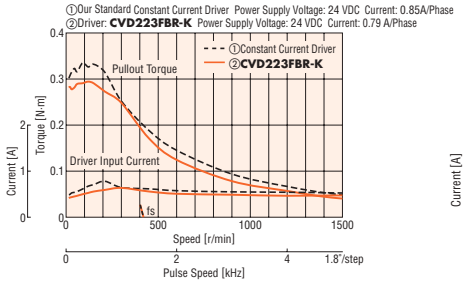

PKP243D15A2/PKP243D15B2

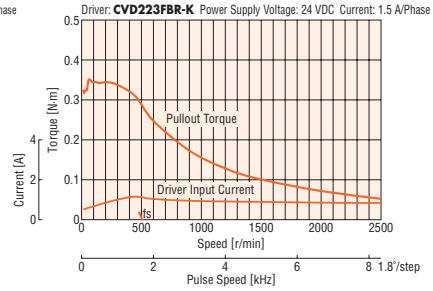

PKP243D23A2/PKP243D23B2

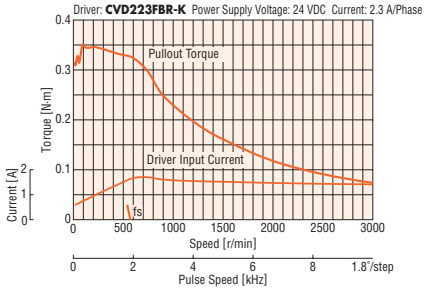

PKP244D08A2/PKP244D08B2

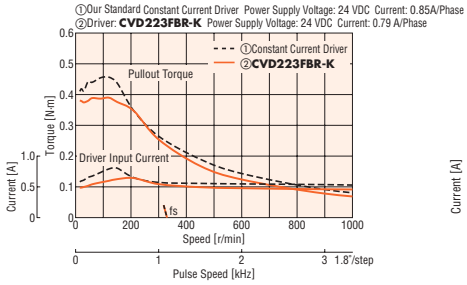

PKP244D15A2/PKP244D15B2

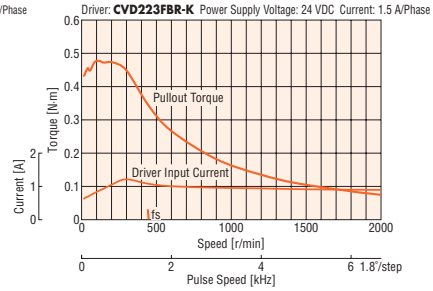

PKP244D23A2/PKP244D23B2

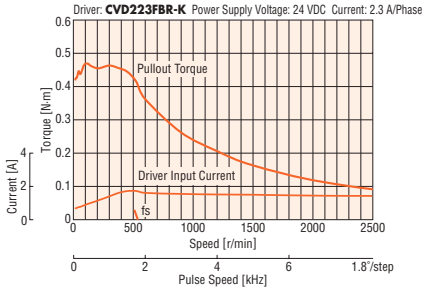

PKP245D08A2/PKP245D08B2

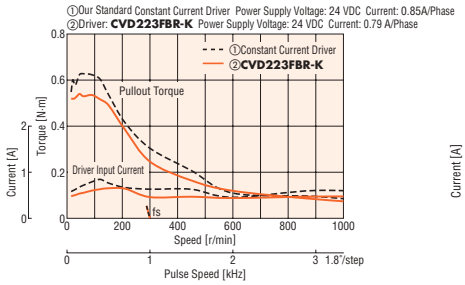

PKP245D15A2/PKP245D15B2

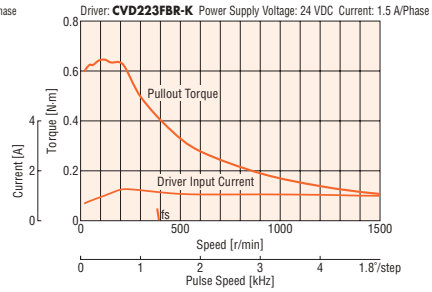

PKP245D23A2/PKP245D23B2

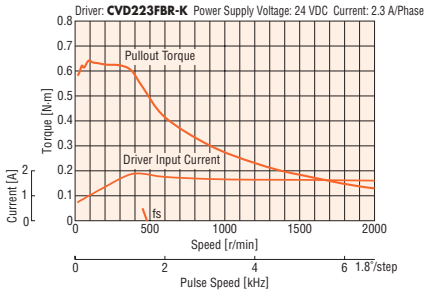

PKP246D15A2/PKP246D15B2

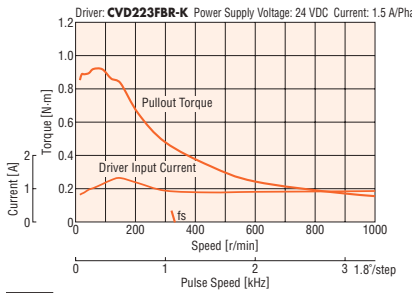

PKP246D23A2/PKP246D23B2

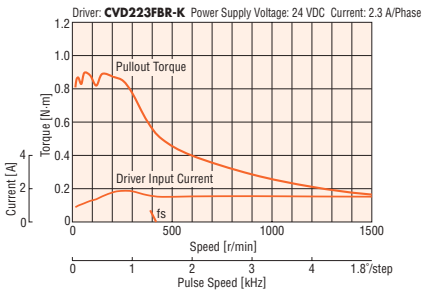

Note

● Data for the speed – torque characteristics is based on Oriental Motor's internal measurement conditions. If the conditions are changed, the characteristics may also change as a result.
● Depending on the driving conditions, a considerable amount of heat may be generated by the motor. Be sure to keep the motor case temperature at 100°C or less.
● Set the driver current to be less than or equal to the rated current of the motor.

Dimensions (Unit: mm)

Motor

2D & 3D CAD

Product Name	L1	L2	Mass kg	2D CAD
PKP243D08A2	33	–	0.23	B1260
PKP243D08B2		48		
PKP243D15A2		–		
PKP243D15B2		48		
PKP243D23A2		–		
PKP243D23B2		48		
PKP244D08A2	39	–	0.3	B1261
PKP244D08B2		54		
PKP244D15A2		–		
PKP244D15B2		54		
PKP244D23A2		–		
PKP244D23B2		54		
PKP245D08A2	47	–	0.37	B1262
PKP245D08B2		62		
PKP245D15A2		–		
PKP245D15B2		62		
PKP245D23A2		–		
PKP245D23B2		62		
PKP246D15A2	59	–	0.5	B1263
PKP246D15B2		74		
PKP246D23A2		–		
PKP246D23B2		74		

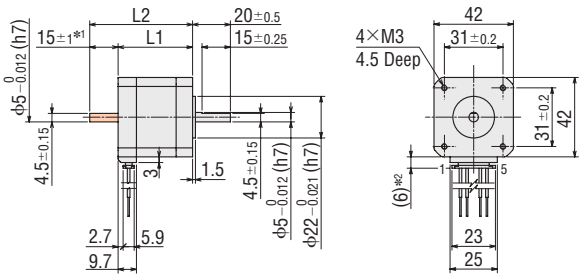

*1 The length of the shaft flat on the double shaft model is 15±0.25.
*2 With connection cable
These dimensions are for double shaft motors.
For single shaft motors, ignore the shaded ▭ areas.

Applicable Connector
Connector Housing: MDF97-5S-3.5C (HIROSE ELECTRIC CO., LTD.)
Contact: MDF97-22SC (HIROSE ELECTRIC CO., LTD.)
Crimp Tool: HT801/MDF97-22S (HIROSE ELECTRIC CO., LTD.)

Connection Cable (Sold separately)

◇For Motor

Product Name	Length L (m)
LC2B06E	0.6

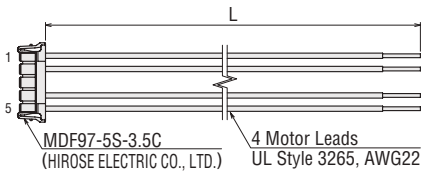

Inner Wiring Diagram of Motor

Wiring Diagram No.: ①

Refer to page 07-85 for inner wiring diagram of motor.

Click Here
For more information, please visit ORIENTAL MOTOR Website:
https://www.orientalmotor.com.sg/om/tp/index.html

Standard Type with Encoder Frame Size 42 mm (Unipolar 5 lead wires)

Specifications

Product Name	Maximum Holding Torque N·m	Rotor Inertia J: kg·m²	Rated Current A/Phase	Voltage VDC	Winding Resistance Ω/Phase	Inductance mH/Phase	Basic Step Angle	Recommended Driver Product Name*
PKP243U09A2-R2EL	0.26	36×10^{-7}	0.95	4.5	4.7	3.7	1.8°	**CMD2109P**
PKP243U09A2-R2FL								
PKP244U12A2-R2EL	0.39	54×10^{-7}	1.2	4.8	4	3.7		**CMD2112P**
PKP244U12A2-R2FL								
PKP245U12A2-R2EL	0.49	73×10^{-7}	1.2	3.8	3.2	3.7		
PKP245U12A2-R2FL								
PKP246U12A2-R2EL	0.75	110×10^{-7}	1.2	6.1	5.1	6		
PKP246U12A2-R2FL								

● Refer to page 07-82 for encoder specifications.

* Refer to page 07-112 for details on the recommended driver.

Speed – Torque Characteristics (Reference values)

PKP243U09A2-R2EL/PKP243U09A2-R2FL

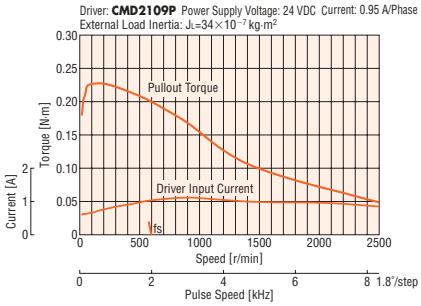

PKP244U12A2-R2EL/PKP244U12A2-R2FL

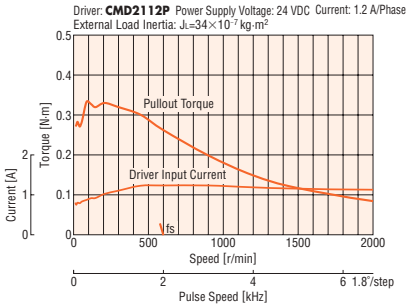

PKP245U12A2-R2EL/PKP245U12A2-R2FL

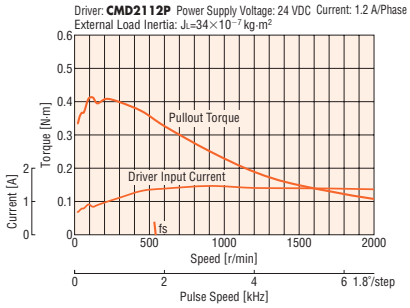

PKP246U12A2-R2EL/PKP246U12A2-R2FL

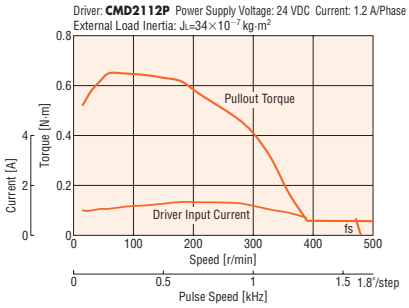

Note

- Data for the speed – torque characteristics is based on Oriental Motor's internal measurement conditions. If the conditions are changed, the characteristics may also change as a result.
- The data in the speed – torque characteristics represents the use of an external load inertia.
- Depending on the driving conditions, a considerable amount of heat may be generated by the motor. To protect the encoder, be sure to keep the motor case temperature at 85°C max.

Dimensions (Unit: mm)

Motor

2D & 3D CAD

Product Name	L	Mass kg	2D CAD
PKP243U09A2-R2EL, PKP243U09A2-R2FL	46.5	0.24	B1328
PKP244U12A2-R2EL, PKP244U12A2-R2FL	52.5	0.31	B1329
PKP245U12A2-R2EL, PKP245U12A2-R2FL	60.5	0.38	B1330
PKP246U12A2-R2EL, PKP246U12A2-R2FL	72.5	0.51	B1331

● Applicable Connector

	Motor (HIROSE ELECTRIC CO., LTD.)	Encoder (Molex)
Connector Housing	MDF97-5S-3.5C	51021-0800
Contact	MDF97-22SC	50079-8100
Crimp Tool	HT801/MDF97-22S	57067-3000

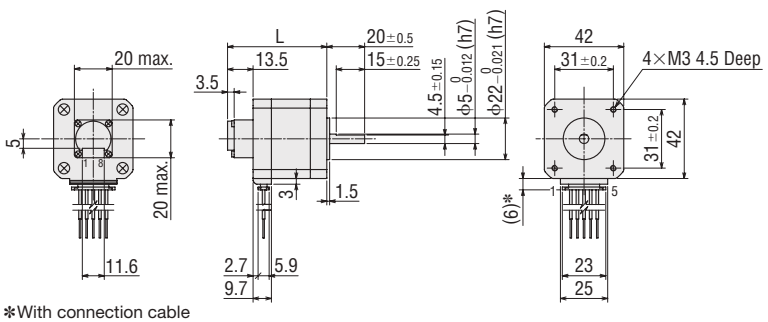

* With connection cable

Connection Cable (Sold separately)

◇For Motor

Product Name	Length L (m)
LC2U06E	0.6

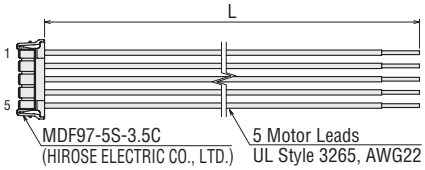

◇For Encoder

Product Name	Length L (m)
LCE08A-006	0.6

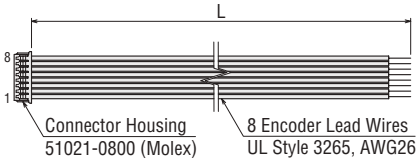

Inner Wiring Diagram of Motor

Wiring Diagram No.: ②

● Refer to page 07-85 for inner wiring diagram of motor.

Standard Type with Encoder Frame Size 42 mm (Bipolar 4 lead wires)

Specifications

Product Name	Maximum Holding Torque N·m	Rotor Inertia J: kg·m^2	Rated Current A/Phase	Voltage VDC	Winding Resistance Ω/Phase	Inductance mH/Phase	Basic Step Angle	Recommended Driver Product Name*
PKP243D15A2-R2EL	0.35	36×10^{-7}	1.5	2.7	1.8	3.3	1.8°	**CVD223FBR-K**
PKP243D15A2-R2FL								
PKP243D23A2-R2EL			2.3	1.8	0.78	1.4		
PKP243D23A2-R2FL								
PKP244D15A2-R2EL	0.48	54×10^{-7}	1.5	3.2	2.1	4.4		
PKP244D15A2-R2FL								
PKP244D23A2-R2EL			2.3	2.1	0.93	1.9		
PKP244D23A2-R2FL								
PKP245D15A2-R2EL	0.66	73×10^{-7}	1.5	3.3	2.2	5.3		
PKP245D15A2-R2FL								
PKP245D23A2-R2EL			2.3	2.3	1	2.2		
PKP245D23A2-R2FL								
PKP246D15A2-R2EL	0.99	110×10^{-7}	1.5	4.4	2.9	7.9		
PKP246D15A2-R2FL								
PKP246D23A2-R2EL			2.3	3.2	1.4	3.3		
PKP246D23A2-R2FL								

Refer to page 07-82 for encoder specifications.

*Refer to page 07-108 for details on the recommended driver.

Speed – Torque Characteristics (Reference values)

PKP243D15A2-R2EL
PKP243D15A2-R2FL

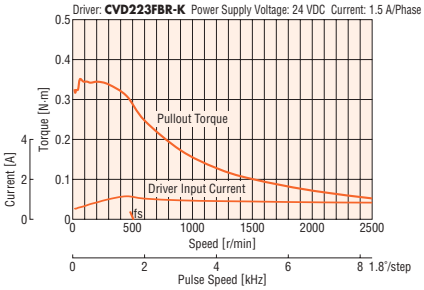

PKP243D23A2-R2EL
PKP243D23A2-R2FL

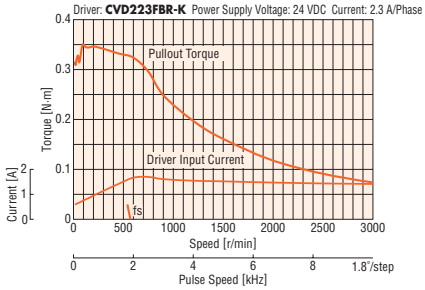

PKP244D15A2-R2EL
PKP244D15A2-R2FL

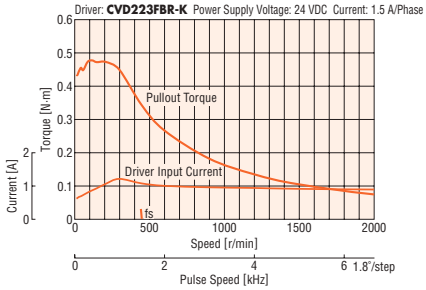

PKP244D23A2-R2EL
PKP244D23A2-R2FL

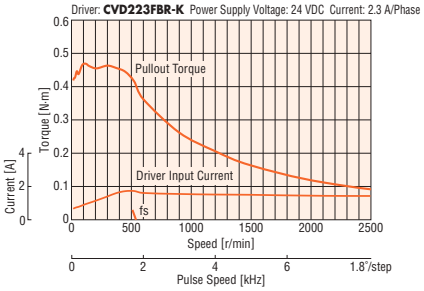

PKP245D15A2-R2EL
PKP245D15A2-R2FL

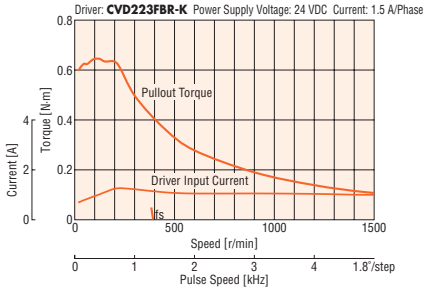

PKP245D23A2-R2EL
PKP245D23A2-R2FL

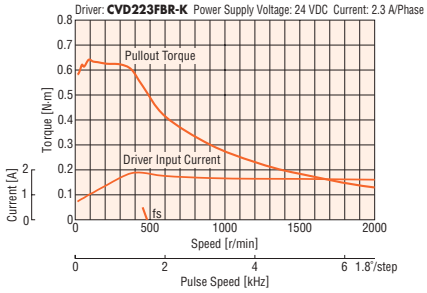

PKP246D15A2-R2EL
PKP246D15A2-R2FL

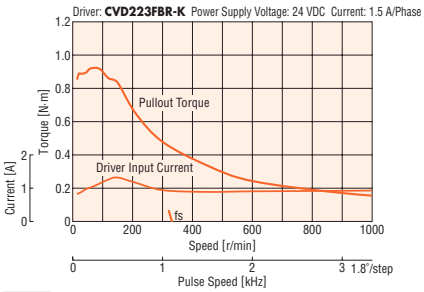

PKP246D23A2-R2EL
PKP246D23A2-R2FL

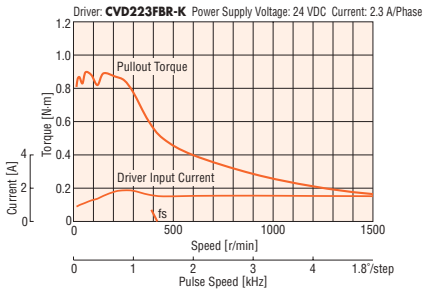

Note

Data for the speed – torque characteristics is based on Oriental Motor's internal measurement conditions. If the conditions are changed, the characteristics may also change as a result.

Depending on the driving conditions, a considerable amount of heat may be generated by the motor. To protect the encoder, be sure to keep the motor case temperature at 85°C max.

Dimensions (Unit: mm)

Motor

2D & 3D CAD

Product Name	L	Mass kg	2D CAD
PKP243D15A2-R2EL	46.5	0.24	B1321
PKP243D15A2-R2FL			
PKP243D23A2-R2EL			
PKP243D23A2-R2FL			
PKP244D15A2-R2EL	52.5	0.31	B1322
PKP244D15A2-R2FL			
PKP244D23A2-R2EL			
PKP244D23A2-R2FL			
PKP245D15A2-R2EL	60.5	0.38	B1323
PKP245D15A2-R2FL			
PKP245D23A2-R2EL			
PKP245D23A2-R2FL			
PKP246D15A2-R2EL	72.5	0.51	B1324
PKP246D15A2-R2FL			
PKP246D23A2-R2EL			
PKP246D23A2-R2FL			

Applicable Connector

	Motor (HIROSE ELECTRIC CO., LTD.)	Encoder (Molex)
Connector Housing	MDF97-5S-3.5C	51021-0800
Contact	MDF97-22SC	50079-8100
Crimp Tool	HT801/MDF97-22S	57067-3000

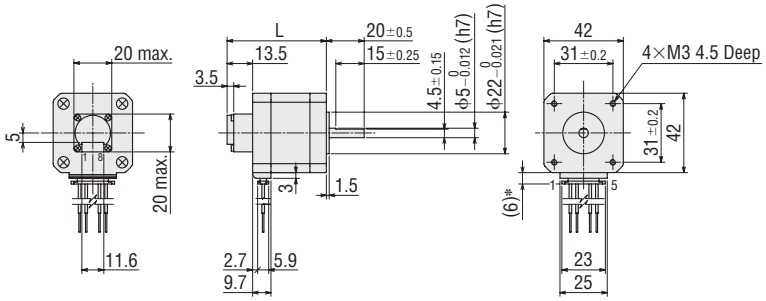

*With connection cable

Connection Cable (Sold separately)

For Motor

Product Name	Length L (m)
LC2B06E	0.6

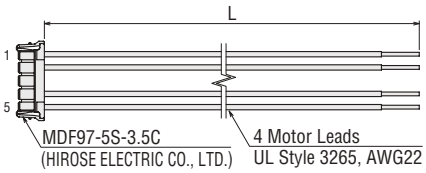

For Encoder

Product Name	Length L (m)
LCE08A-006	0.6

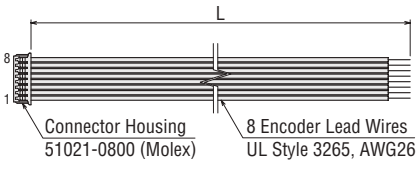

Inner Wiring Diagram of Motor

Wiring Diagram No.: ①

Refer to page 07-85 for inner wiring diagram of motor.

Click Here

For more information, please visit ORIENTAL MOTOR Website:
https://www.orientalmotor.com.sg/om/tp/index.html

Standard Type with Electromagnetic Brake

Frame Size 42 mm (Unipolar 6 lead wires)

Specifications

Product Name	Maximum Holding Torque N·m	Rotor Inertia J: kg·m^2	Rated Current A/Phase	Voltage VDC	Winding Resistance Ω/Phase	Inductance mH/Phase	Basic Step Angle	Electromagnetic Brake Static Friction Torque N·m
PKP243U09M	0.25	48×10^{-7}	0.95	4.47	4.7	5	1.8°	0.3
PKP244U12M	0.39	69×10^{-7}	1.2	4.8	4	3.9		
PKP245U12M	0.45	95×10^{-7}		4.56	3.8	5		
PKP246U12M	0.75	126×10^{-7}		7.2	6	6.5		

Refer to page 07-82 for electromagnetic brake specifications.

Speed – Torque Characteristics (Reference values)

PKP243U09M

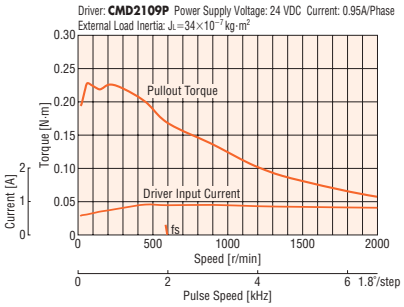

PKP244U12M

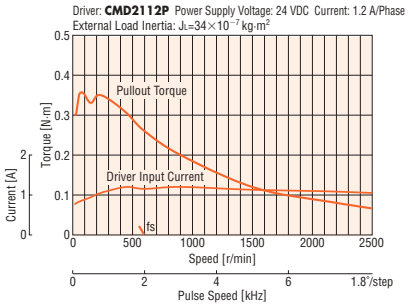

PKP245U12M

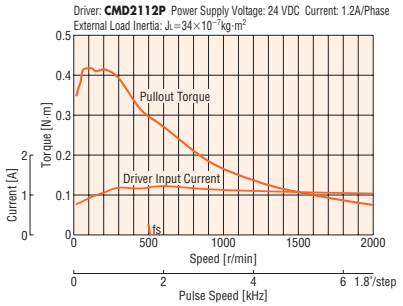

PKP246U12M

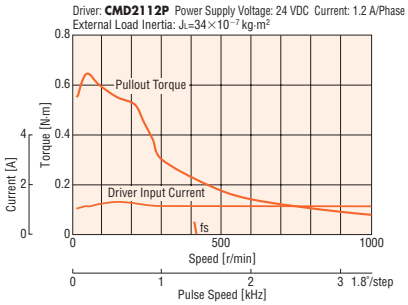

Note

- Data for the speed – torque characteristics is based on Oriental Motor's internal measurement conditions. If the conditions are changed, the characteristics may also change as a result.
- The data in the speed – torque characteristics represents the use of an external load inertia.
- Depending on the driving conditions, a considerable amount of heat may be generated by the motor. Be sure to keep the motor case temperature at 100°C or less.

Dimensions (Unit: mm)

Motor

2D & 3D CAD

Product Name	L	Mass kg	2D CAD
PKP243U09M	67	0.36	B1136
PKP244U12M	73	0.41	B1137
PKP245U12M	81	0.5	B1138
PKP246U12M	93	0.61	B1139

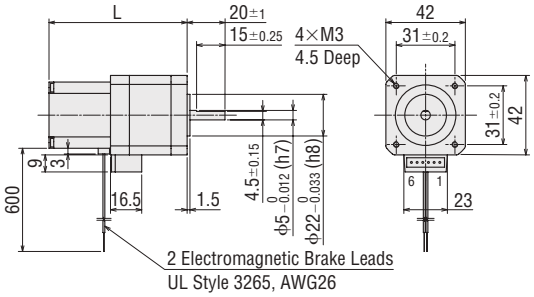

- Applicable Connector (Molex)
  Connector Housing: 51103-0600
  Contact: 50351-8100
  Crimp Tool: 57295-5000

Connection Cable (Sold separately)

◇For Motor

Product Name	Length L (m)
LC2U06B	0.6
LC2U10B	1

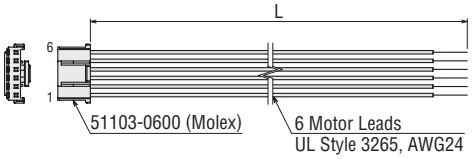

Inner Wiring Diagram of Motor

Wiring Diagram No.: ④

Refer to page 07-85 for inner wiring diagram of motor.

Standard Type with Electromagnetic Brake

Frame Size 42 mm (Bipolar 4 lead wires)

Specifications

Product Name	Maximum Holding Torque N·m	Rotor Inertia J: kg·m^2	Rated Current A/Phase	Voltage VDC	Winding Resistance Ω/Phase	Inductance mH/Phase	Basic Step Angle	Electromagnetic Brake Static Friction Torque N·m
PKP243D15M	0.35	48×10^{-7}	1.5	2.85	1.9	5	1.8°	0.3
PKP244D15M	0.48	69×10^{-7}		3.9	2.6	4.9		
PKP245D15M	0.58	95×10^{-7}		3.6	2.4	6.6		
PKP246D15M	0.93	126×10^{-7}		5.8	3.87	8		

Refer to page 07-82 for electromagnetic brake specifications.

Speed – Torque Characteristics (Reference values)

PKP243D15M

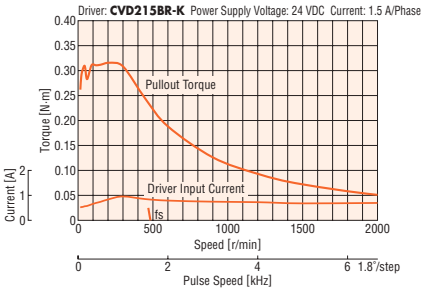

PKP244D15M

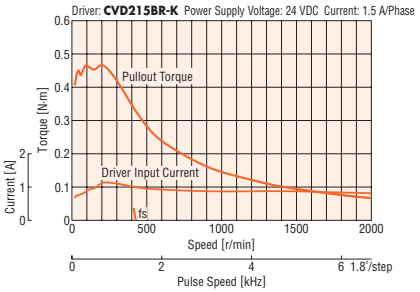

PKP245D15M

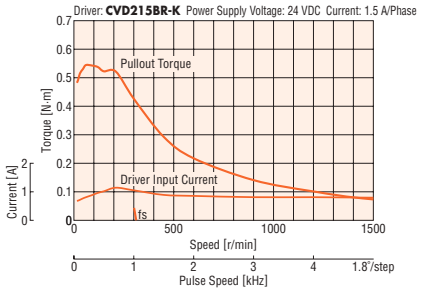

PKP246D15M

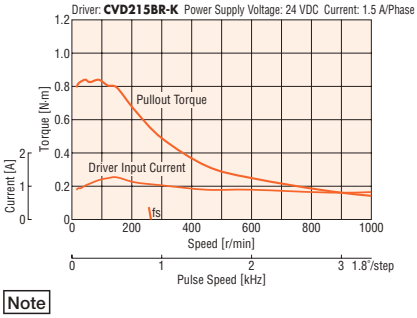

Note

- Data for the speed – torque characteristics is based on Oriental Motor's internal measurement conditions. If the conditions are changed, the characteristics may also change as a result.
- Depending on the driving conditions, a considerable amount of heat may be generated by the motor. Be sure to keep the motor case temperature at 100°C or less.

Dimensions (Unit: mm)

Motor

2D & 3D CAD

Product Name	L	Mass kg	2D CAD
PKP243D15M	67	0.36	B1136
PKP244D15M	73	0.41	B1137
PKP245D15M	81	0.5	B1138
PKP246D15M	93	0.61	B1139

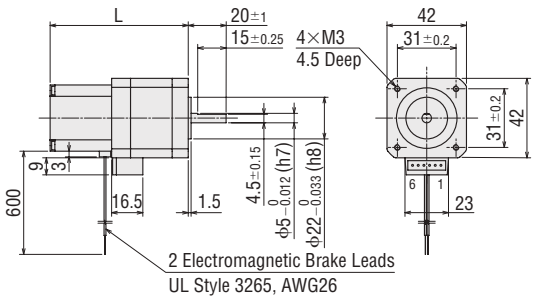

- Applicable Connector (Molex)
  Connector Housing: 51103-0600
  Contact: 50351-8100
  Crimp Tool: 57295-5000

Connection Cable (Sold separately)

◇For Motor

Product Name	Length L (m)
LC2B06B	0.6

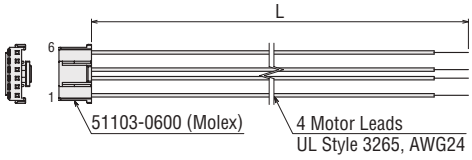

Inner Wiring Diagram of Motor

Wiring Diagram No.: ③

Refer to page 07-85 for inner wiring diagram of motor.

Click Here
For more information, please visit ORIENTAL MOTOR Website:
https://www.orientalmotor.com.sg/om/tp/index.html

Standard Type Frame Size 50 mm (Unipolar 6 lead wires)

Specifications

Product Name	Maximum Holding Torque N·m	Rotor Inertia J: kg·m^2	Rated Current A/Phase	Voltage VDC	Winding Resistance Ω/Phase	Inductance mH/Phase	Basic Step Angle	Recommended Driver Product Name*
PK256-02□	0.6	230×10^{-7}	2	3	1.5	1.4	1.8°	**CMD2120P**
PK258-02□	1.2	420×10^{-7}		4.8	2.4	2.87		

● Either **A** (Single Shaft) or **B** (Double Shaft) indicating the configuration is specified where the box □ is located in the product name.

*Refer to page 07-112 for details on the recommended driver.

Speed – Torque Characteristics (Reference values)

PK256-02A/PK256-02B

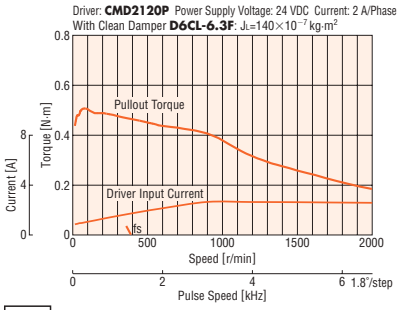

PK258-02A/PK258-02B

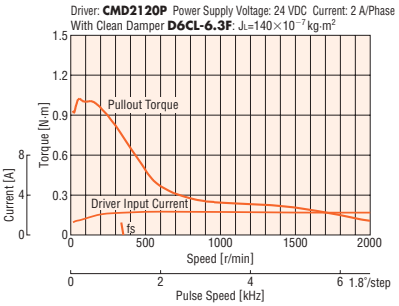

Note

● Data for the speed – torque characteristics is based on Oriental Motor's internal measurement conditions. If the conditions are changed, the characteristics may also change as a result.

● If there is a "clean damper" entry in the speed – torque characteristics, the data is for a double shaft motor when a clean damper is equipped.

● Depending on the driving conditions, a considerable amount of heat may be generated by the motor. Be sure to keep the motor case temperature at 100°C or less.

Dimensions (Unit: mm)

Motor

2D & 3D CAD

Product Name	L1	L2	Mass kg	2D CAD
PK256-02A	51.5	–	0.53	B293
PK256-02B		67.5		
PK258-02A	81	–	0.89	B334
PK258-02B		97		

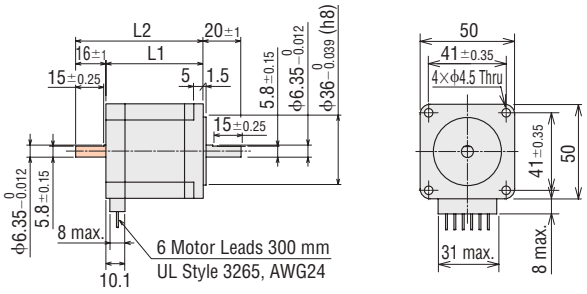

● These dimensions are for double shaft motors.
For single shaft motors, ignore the shaded ▭ areas.

Inner Wiring Diagram of Motor

Wiring Diagram No.: ⑦

● Refer to page 07-85 for inner wiring diagram of motor.

Standard Type Frame Size 56.4 mm (Unipolar 5 lead wires)

Specifications

Product Name	Maximum Holding Torque N·m	Rotor Inertia J: kg·m^2	Rated Current A/Phase	Voltage VDC	Winding Resistance Ω/Phase	Inductance mH/Phase	Basic Step Angle	Recommended Driver Product Name*
PKP264U10□2	0.58	140×10^{-7}	1	4.4	4.4	6	1.8°	**CMD2120P**
PKP264U20□2			2	2.2	1.1	1.5		
PKP266U10□2	1.1	270×10^{-7}	1	6.9	6.9	11.6		
PKP266U20□2			2	3.4	1.7	2.9		
PKP268U10□2	2	500×10^{-7}	1	9.9	9.9	18.4		
PKP268U20□2			2	4.8	2.4	4.6		

●Either **A** (Single Shaft) or **B** (Double Shaft) indicating the configuration is specified where the box □ is located in the product name.

*Refer to page 07-112 for details on the recommended driver.

Speed – Torque Characteristics (Reference values)

PKP264U10A2/PKP264U10B2

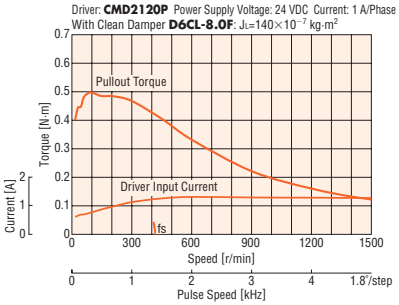

PKP266U10A2/PKP266U10B2

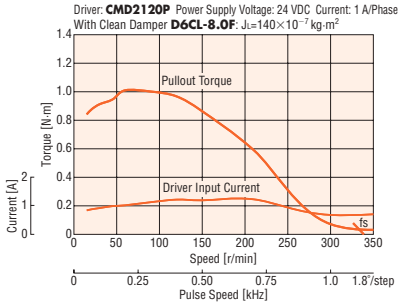

PKP268U10A2/PKP268U10B2

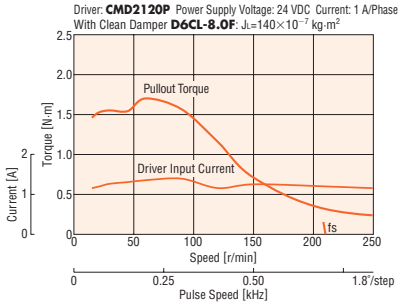

PKP264U20A2/PKP264U20B2

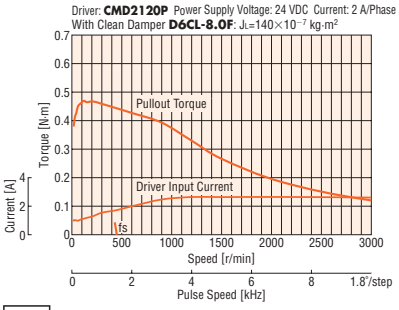

PKP266U20A2/PKP266U20B2

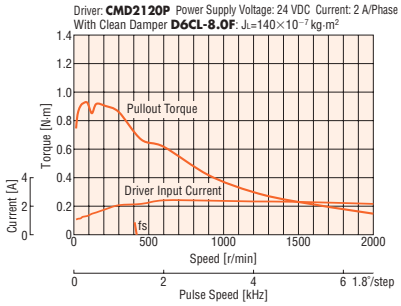

PKP268U20A2/PKP268U20B2

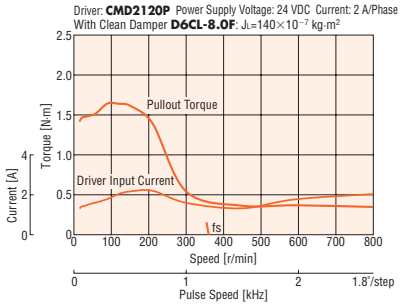

Note

●Data for the speed – torque characteristics is based on Oriental Motor's internal measurement conditions. If the conditions are changed, the characteristics may also change as a result.

●If there is a "clean damper" entry in the speed – torque characteristics, the data is for a double shaft motor when a clean damper is equipped.

●Depending on the driving conditions, a considerable amount of heat may be generated by the motor. Be sure to keep the motor case temperature at 100°C or less.

Dimensions (Unit: mm)

Motor

2D & 3D CAD

Product Name	L1	L2	Mass kg	2D CAD
PKP264U10A2	39	–	0.45	B1257
PKP264U10B2		62		
PKP264U20A2		–		
PKP264U20B2		62		
PKP266U10A2	54	–	0.7	B1258
PKP266U10B2		77		
PKP266U20A2		–		
PKP266U20B2		77		
PKP268U10A2	76	–	1.1	B1259
PKP268U10B2		99		
PKP268U20A2		–		
PKP268U20B2		99		

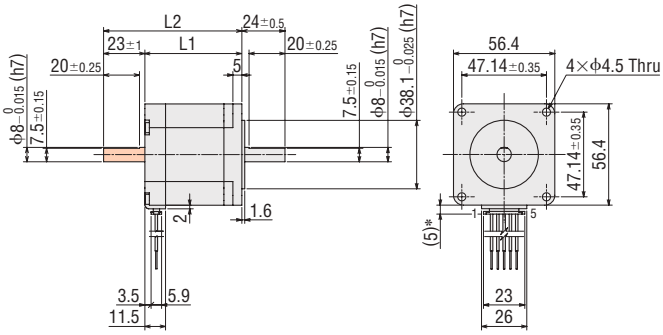

*With connection cable

●These dimensions are for double shaft motors.
For single shaft motors, ignore the shaded ▭ areas.

●Applicable Connector
Connector Housing: MDF97-5S-3.5C (HIROSE ELECTRIC CO., LTD.)
Contact: MDF97-22SC (HIROSE ELECTRIC CO., LTD.)
Crimp Tool: HT801/MDF97-22S (HIROSE ELECTRIC CO., LTD.)

Connection Cable (Sold separately)

◇For Motor

Product Name	Length L (m)
LC2U06E	0.6

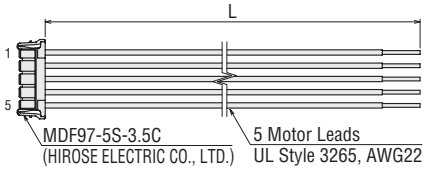

Inner Wiring Diagram of Motor

Wiring Diagram No.: ②

●Refer to page 07-85 for inner wiring diagram of motor.

Click Here
For more information, please visit ORIENTAL MOTOR Website:
https://www.orientalmotor.com.sg/om/tp/index.html

Standard Type Frame Size 56.4 mm (Bipolar 4 lead wires)

Specifications

Product Name	Maximum Holding Torque N·m	Rotor Inertia J: kg·m^2	Rated Current A/Phase	Voltage VDC	Winding Resistance Ω/Phase	Inductance mH/Phase	Basic Step Angle	Recommended Driver Product Name*
PKP264D14□2	0.74	140×10^{-7}	1.4	2.9	2.1	6	1.8°	**CVD228BR-K**
PKP264D28□2			2.8	1.6	0.57	1.5		
PKP264D42□2			4.2	1	0.24	0.65		**CVD242BR-K**
PKP266D14□2	1.4	270×10^{-7}	1.4	4.6	3.3	12		**CVD228BR-K**
PKP266D28□2			2.8	2.4	0.86	2.9		
PKP266D42□2			4.2	1.6	0.38	1.3		**CVD242BR-K**
PKP268D14□2	2.5	500×10^{-7}	1.4	6.6	4.7	18		**CVD228BR-K**
PKP268D28□2			2.8	3.4	1.2	4.6		
PKP268D42□2			4.2	2.2	0.53	2		**CVD242BR-K**

● Either **A** (Single Shaft) or **B** (Double Shaft) indicating the configuration is specified where the box □ is located in the product name.
✻Refer to page 07-108 for details on the recommended driver.

Speed – Torque Characteristics (Reference values)

PKP264D14A2/PKP264D14B2

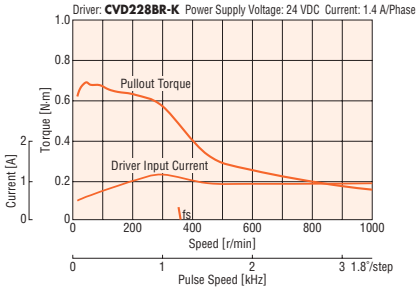

PKP264D28A2/PKP264D28B2

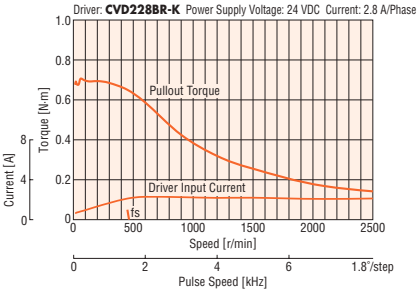

PKP264D42A2/PKP264D42B2

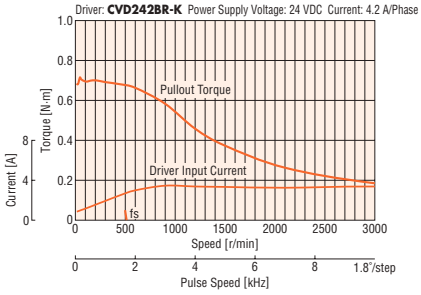

PKP266D14A2/PKP266D14B2

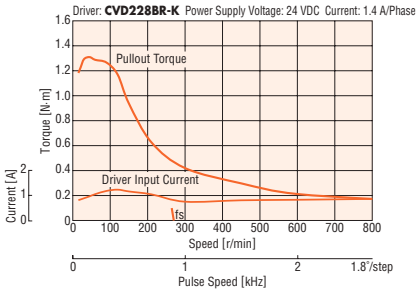

PKP266D28A2/PKP266D28B2

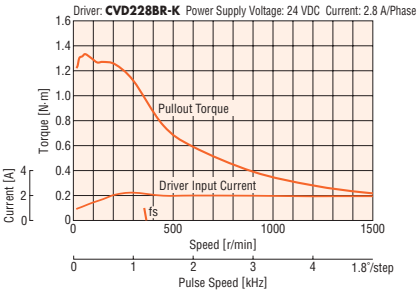

PKP266D42A2/PKP266D42B2

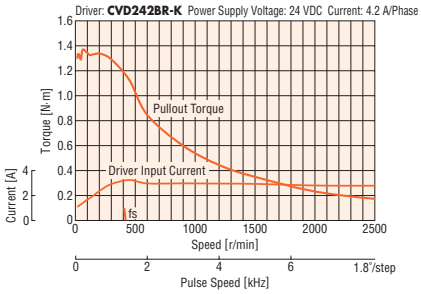

PKP268D14A2/PKP268D14B2

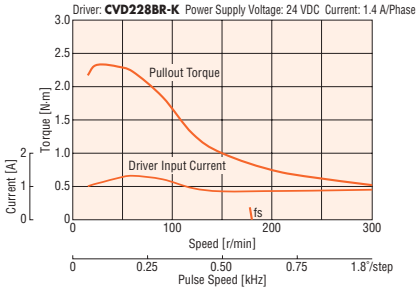

PKP268D28A2/PKP268D28B2

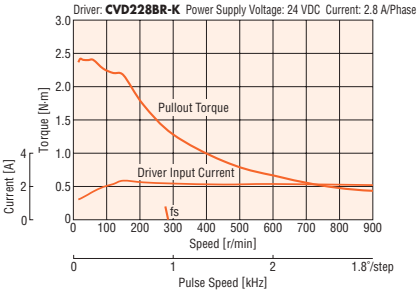

PKP268D42A2/PKP268D42B2

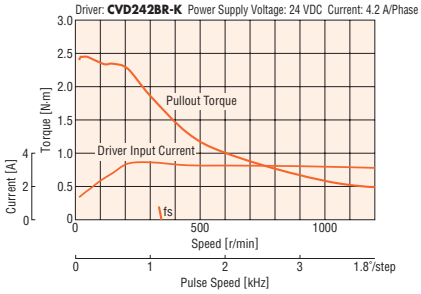

Note

● Data for the speed – torque characteristics is based on Oriental Motor's internal measurement conditions. If the conditions are changed, the characteristics may also change as a result.
● Depending on the driving conditions, a considerable amount of heat may be generated by the motor. Be sure to keep the motor case temperature at 100°C or less.

Dimensions (Unit: mm)

Motor

2D & 3D CAD

Product Name	L1	L2	Mass kg	2D CAD
PKP264D14A2	39	–	0.45	B1249
PKP264D14B2		62		
PKP264D28A2		–		
PKP264D28B2		62		
PKP264D42A2		–		
PKP264D42B2		62		
PKP266D14A2	54	–	0.7	B1250
PKP266D14B2		77		
PKP266D28A2		–		
PKP266D28B2		77		
PKP266D42A2		–		
PKP266D42B2		77		
PKP268D14A2	76	–	1.1	B1251
PKP268D14B2		99		
PKP268D28A2		–		
PKP268D28B2		99		
PKP268D42A2		–		
PKP268D42B2		99		

● Applicable Connector
Connector Housing: MDF97-5S-3.5C (HIROSE ELECTRIC CO., LTD.)
Contact: MDF97-22SC (HIROSE ELECTRIC CO., LTD.)
Crimp Tool: HT801/MDF97-22S (HIROSE ELECTRIC CO., LTD.)

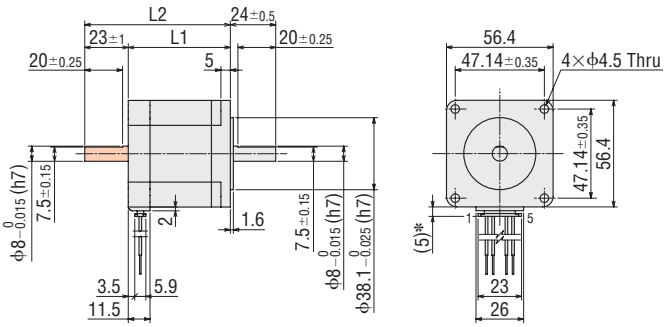

*With connection cable
● These dimensions are for double shaft motors.
For single shaft motors, ignore the shaded ▭ areas.

Connection Cable (Sold separately)

◇For Motor

Product Name	Length L (m)
LC2B06E	0.6

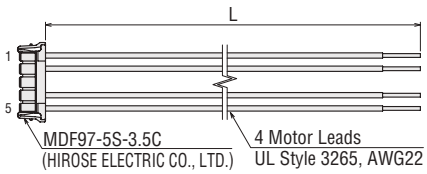

Inner Wiring Diagram of Motor

Wiring Diagram No.: ①

● Refer to page 07-85 for inner wiring diagram of motor.

Click Here
For more information, please visit ORIENTAL MOTOR Website:
https://www.orientalmotor.com.sg/om/tp/index.html

Standard Type with Encoder Frame Size 56.4 mm (Unipolar 5 lead wires)

Specifications

Product Name	Maximum Holding Torque N·m	Rotor Inertia J: kg·m^2	Rated Current A/Phase	Voltage VDC	Winding Resistance Ω/Phase	Inductance mH/Phase	Basic Step Angle	Recommended Driver Product Name*
PKP264U10A2-R2EL	0.58	140×10^{-7}	1	4.4	4.4	6	1.8°	**CMD2120P**
PKP264U10A2-R2FL								
PKP264U20A2-R2EL			2	2.2	1.1	1.5		
PKP264U20A2-R2FL								
PKP266U10A2-R2EL	1.1	270×10^{-7}	1	6.9	6.9	11.6		
PKP266U10A2-R2FL								
PKP266U20A2-R2EL			2	3.4	1.7	2.9		
PKP266U20A2-R2FL								
PKP268U10A2-R2EL	2	500×10^{-7}	1	9.9	9.9	18.4		
PKP268U10A2-R2FL								
PKP268U20A2-R2EL			2	4.8	2.4	4.6		
PKP268U20A2-R2FL								

Refer to page 07-82 for encoder specifications.

*Refer to page 07-112 for details on the recommended driver.

Speed – Torque Characteristics (Reference values)

PKP264U10A2-R2EL
PKP264U10A2-R2FL

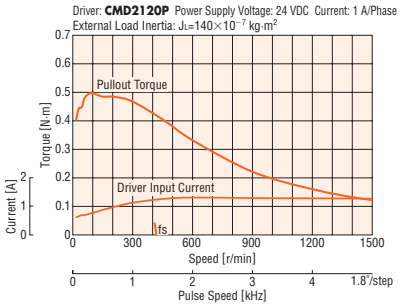

PKP266U10A2-R2EL
PKP266U10A2-R2FL

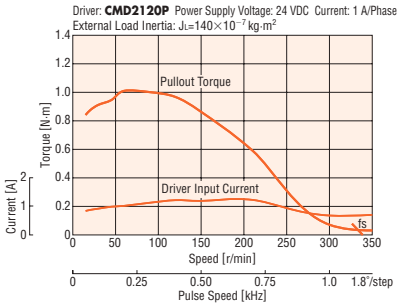

PKP268U10A2-R2EL
PKP268U10A2-R2FL

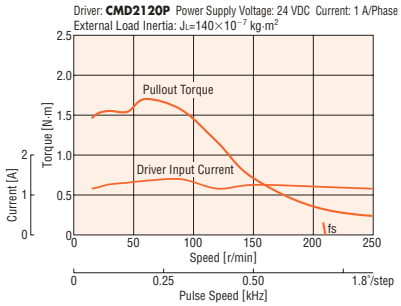

PKP264U20A2-R2EL
PKP264U20A2-R2FL

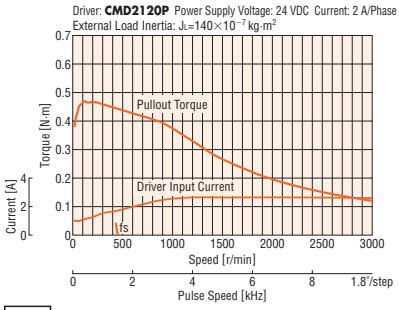

PKP266U20A2-R2EL
PKP266U20A2-R2FL

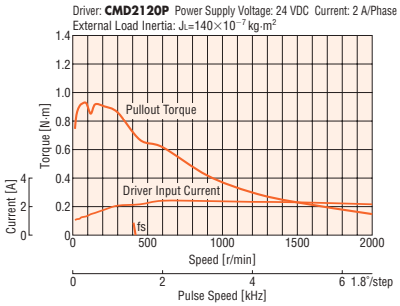

PKP268U20A2-R2EL
PKP268U20A2-R2FL

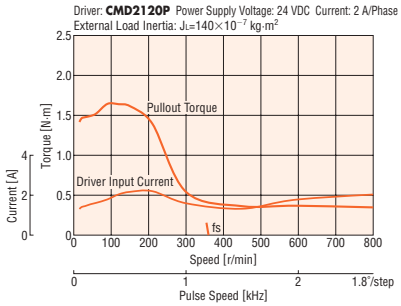

Note

- Data for the speed – torque characteristics is based on Oriental Motor's internal measurement conditions. If the conditions are changed, the characteristics may also change as a result.
- The data in the speed – torque characteristics represents the use of an external load inertia.
- Depending on the driving conditions, a considerable amount of heat may be generated by the motor. To protect the encoder, be sure to keep the motor case temperature at 85°C max.

Dimensions (Unit: mm)

Motor

2D & 3D CAD

Product Name	L	Mass kg	2D CAD
PKP264U10A2-R2EL	55.5	0.45	B1332
PKP264U10A2-R2FL			
PKP264U20A2-R2EL			
PKP264U20A2-R2FL			
PKP266U10A2-R2EL	70.5	0.7	B1333
PKP266U10A2-R2FL			
PKP266U20A2-R2EL			
PKP266U20A2-R2FL			
PKP268U10A2-R2EL	92.5	1.1	B1334
PKP268U10A2-R2FL			
PKP268U20A2-R2EL			
PKP268U20A2-R2FL			

Applicable Connector

	Motor (HIROSE ELECTRIC CO., LTD.)	Encoder (Molex)
Connector Housing	MDF97-5S-3.5C	51021-0800
Contact	MDF97-22SC	50079-8100
Crimp Tool	HT801/MDF97-22S	57067-3000

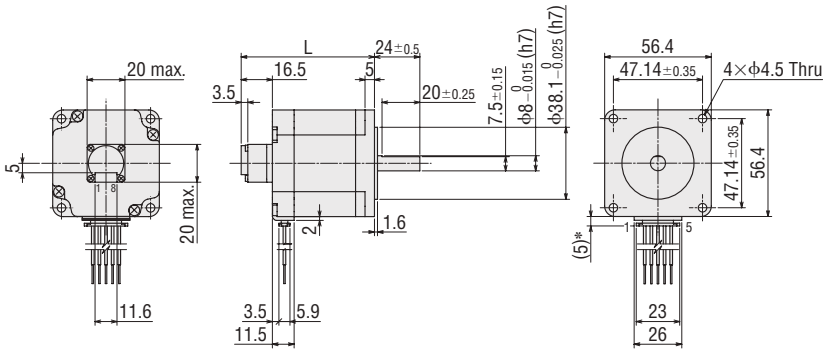

*With Connection Cable

Connection Cable (Sold separately)

◇For Motor

Product Name	Length L (m)
LC2U06E	0.6

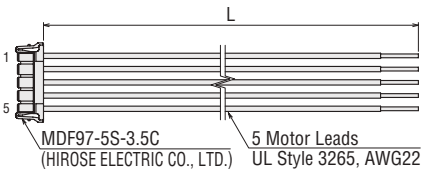

◇For Encoder

Product Name	Length L (m)
LCE08A-006	0.6

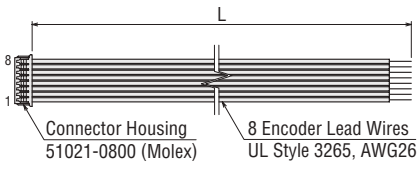

Inner Wiring Diagram of Motor

Wiring Diagram No.: ②

Refer to page 07-85 for inner wiring diagram of motor.

Standard Type with Encoder Frame Size 56.4 mm (Bipolar 4 lead wires)

Specifications

Product Name	Maximum Holding Torque N·m	Rotor Inertia J: kg·m^2	Rated Current A/Phase	Voltage VDC	Winding Resistance Ω/Phase	Inductance mH/Phase	Basic Step Angle	Recommended Driver Product Name*
PKP264D14A2-R2EL	0.74	140×10^{-7}	1.4	2.9	2.1	6	1.8°	**CVD228BR-K**
PKP264D14A2-R2FL								
PKP264D28A2-R2EL			2.8	1.6	0.57	1.5		
PKP264D28A2-R2FL								
PKP264D42A2-R2EL			4.2	1	0.24	0.65		**CVD242BR-K**
PKP264D42A2-R2FL								
PKP266D14A2-R2EL	1.4	270×10^{-7}	1.4	4.6	3.3	12		**CVD228BR-K**
PKP266D14A2-R2FL								
PKP266D28A2-R2EL			2.8	2.4	0.86	2.9		
PKP266D28A2-R2FL								
PKP266D42A2-R2EL			4.2	1.6	0.38	1.3		**CVD242BR-K**
PKP266D42A2-R2FL								
PKP268D14A2-R2EL	2.5	500×10^{-7}	1.4	6.6	4.7	18		**CVD228BR-K**
PKP268D14A2-R2FL								
PKP268D28A2-R2EL			2.8	3.4	1.2	4.6		
PKP268D28A2-R2FL								
PKP268D42A2-R2EL			4.2	2.2	0.53	2		**CVD242BR-K**
PKP268D42A2-R2FL								

● Refer to page 07-82 for encoder specifications.

✻ Refer to page 07-108 for details on the recommended driver.

Speed – Torque Characteristics (Reference values)

PKP264D14A2-R2EL
PKP264D14A2-R2FL

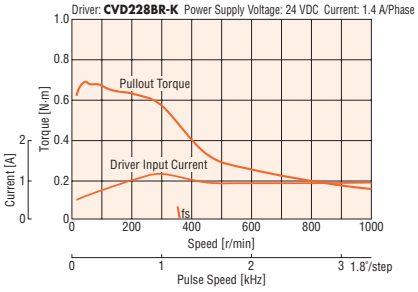

PKP264D28A2-R2EL
PKP264D28A2-R2FL

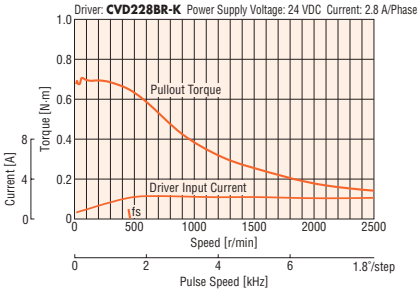

PKP264D42A2-R2EL
PKP264D42A2-R2FL

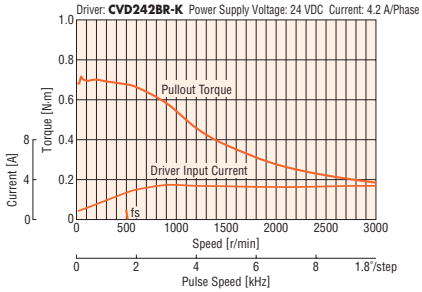

PKP266D14A2-R2EL
PKP266D14A2-R2FL

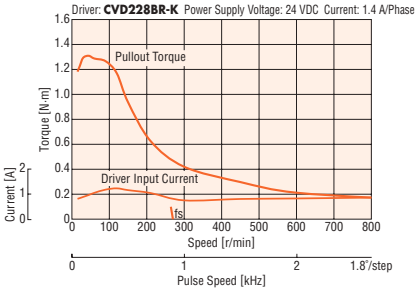

PKP266D28A2-R2EL
PKP266D28A2-R2FL

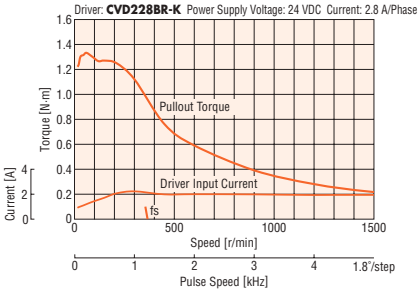

PKP266D42A2-R2EL
PKP266D42A2-R2FL

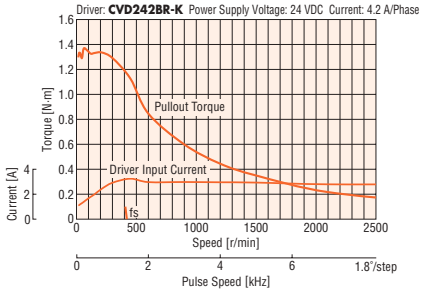

PKP268D14A2-R2EL
PKP268D14A2-R2FL

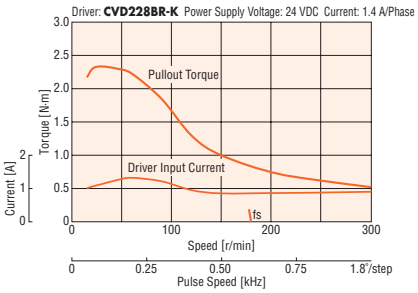

PKP268D28A2-R2EL
PKP268D28A2-R2FL

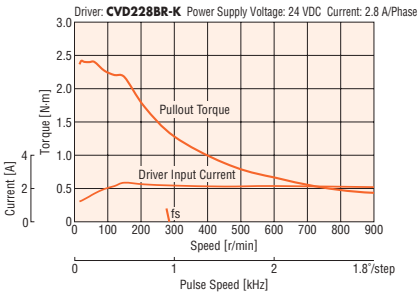

PKP268D42A2-R2EL
PKP268D42A2-R2FL

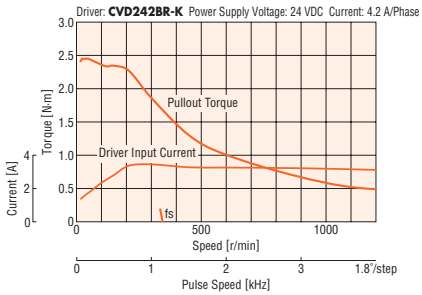

Note

● Data for the speed – torque characteristics is based on Oriental Motor's internal measurement conditions. If the conditions are changed, the characteristics may also change as a result.

● Depending on the driving conditions, a considerable amount of heat may be generated by the motor. To protect the encoder, be sure to keep the motor case temperature at 85°C max.

Dimensions (Unit: mm)

Motor

2D & 3D CAD

Product Name	L	Mass kg	2D CAD
PKP264D14A2-R2EL	55.5	0.45	B1325
PKP264D14A2-R2FL			
PKP264D28A2-R2EL			
PKP264D28A2-R2FL			
PKP264D42A2-R2EL			
PKP264D42A2-R2FL			
PKP266D14A2-R2EL	70.5	0.7	B1326
PKP266D14A2-R2FL			
PKP266D28A2-R2EL			
PKP266D28A2-R2FL			
PKP266D42A2-R2EL			
PKP266D42A2-R2FL			
PKP268D14A2-R2EL	92.5	1.1	B1327
PKP268D14A2-R2FL			
PKP268D28A2-R2EL			
PKP268D28A2-R2FL			
PKP268D42A2-R2EL			
PKP268D42A2-R2FL			

● Applicable Connector

	Motor (HIROSE ELECTRIC CO., LTD.)	Encoder (Molex)
Connector Housing	MDF97-5S-3.5C	51021-0800
Contact	MDF97-22SC	50079-8100
Crimp Tool	HT801/MDF97-22S	57067-3000

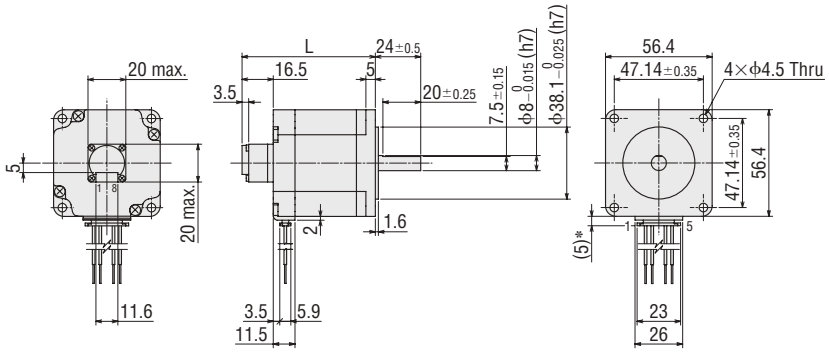

✻With connection cable

Connection Cable (Sold separately)

◇For Motor

Product Name	Length L (m)
LC2B06E	0.6

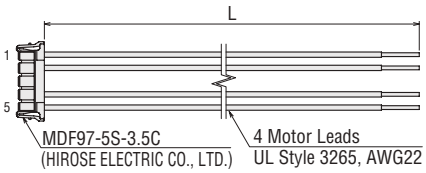

◇For Encoder

Product Name	Length L (m)
LCE08A-006	0.6

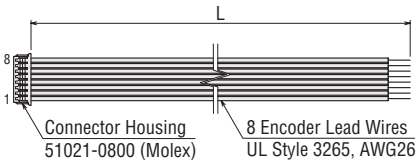

Inner Wiring Diagram of Motor

Wiring Diagram No.: ①

● Refer to page 07-85 for inner wiring diagram of motor.

Standard Type with Electromagnetic Brake

Frame Size 56.4 mm (Unipolar 6 lead wires)

Specifications

Product Name	Maximum Holding Torque N·m	Rotor Inertia J: kg·m^2	Rated Current A/Phase	Voltage VDC	Winding Resistance Ω/Phase	Inductance mH/Phase	Basic Step Angle	Electromagnetic Brake Static Friction Torque N·m
PKP264U20M	0.51	270×10^{-7}	2	2.9	1.45	1.8	1.8°	1.5
PKP266U20M	1.1	440×10^{-7}		4	2	2.9		
PKP268U20M	1.75	640×10^{-7}		4.9	2.45	4.4		

● Refer to page 07-82 for electromagnetic brake specifications.

Speed – Torque Characteristics (Reference values)

PKP264U20M

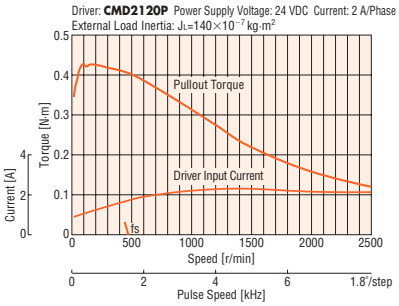

PKP266U20M

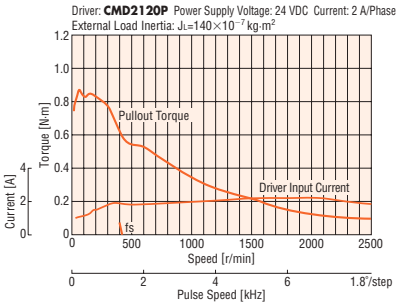

PKP268U20M

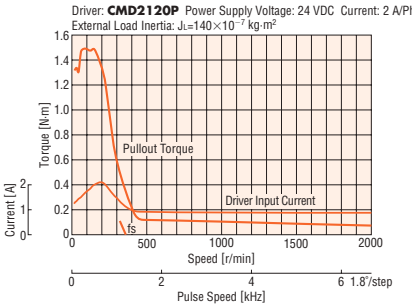

Note

- Data for the speed – torque characteristics is based on Oriental Motor's internal measurement conditions. If the conditions are changed, the characteristics may also change as a result.
- The data in the speed – torque characteristics represents the use of an external load inertia.
- Depending on the driving conditions, a considerable amount of heat may be generated by the motor. Be sure to keep the motor case temperature at 100°C or less.

Dimensions (Unit: mm)

Motor

2D & 3D CAD

Product Name	L	Mass kg	2D CAD
PKP264U20M	75.5	0.76	B1140
PKP266U20M	90.5	1.03	B1141
PKP268U20M	112.5	1.4	B1142

● Applicable Connector (Molex)
Connector Housing: 51067-0600
Contact: 50217-9101
Crimp Tool: 57189-5000
57190-5000

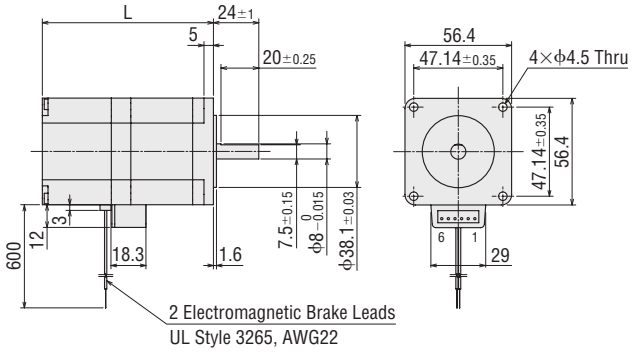

Connection Cable (Sold separately)

◇For Motor

Product Name	Length L (m)
LC2U06C	0.6
LC2U10C	1

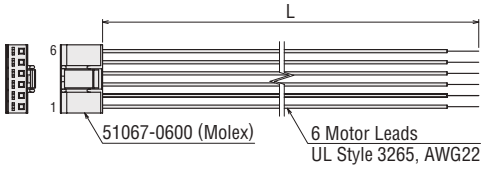

Inner Wiring Diagram of Motor

Wiring Diagram No.: ④

● Refer to page 07-85 for inner wiring diagram of motor.

Standard Type with Electromagnetic Brake

Frame Size 56.4 mm (Bipolar 4 lead wires)

Specifications

Product Name	Maximum Holding Torque N·m	Rotor Inertia J: kg·m^2	Rated Current A/Phase	Voltage VDC	Winding Resistance Ω/Phase	Inductance mH/Phase	Basic Step Angle	Electromagnetic Brake Static Friction Torque N·m
PKP264D28M	0.6	270×10^{-7}	2.8	2	0.73	1.8	1.8°	1.5
PKP266D28M	1.4	440×10^{-7}		2.8	1	2.9		
PKP268D28M	2.3	640×10^{-7}		3.4	1.23	4.4		

● Refer to page 07-82 for electromagnetic brake specifications.

Speed – Torque Characteristics (Reference values)

PKP264D28M

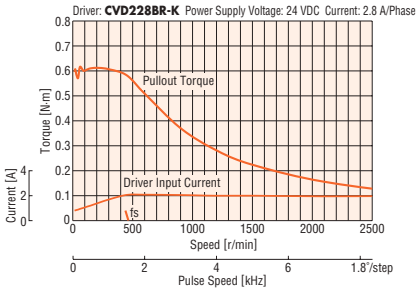

PKP266D28M

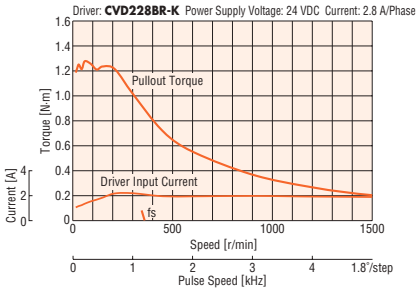

PKP268D28M

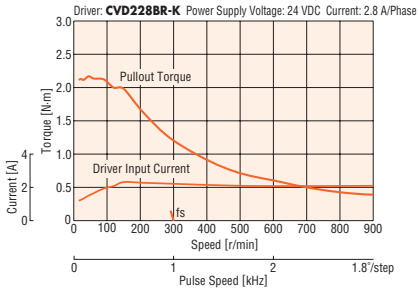

Note

- Data for the speed – torque characteristics is based on Oriental Motor's internal measurement conditions. If the conditions are changed, the characteristics may also change as a result.
- Depending on the driving conditions, a considerable amount of heat may be generated by the motor. Be sure to keep the motor case temperature at 100°C or less.

Dimensions (Unit: mm)

Motor

2D & 3D CAD

Product Name	L	Mass kg	2D CAD
PKP264D28M	75.5	0.76	B1140
PKP266D28M	90.5	1.03	B1141
PKP268D28M	112.5	1.4	B1142

- Applicable Connector (Molex)
  Connector Housing: 51067-0600
  Contact: 50217-9101
  Crimp Tool: 57189-5000
  57190-5000

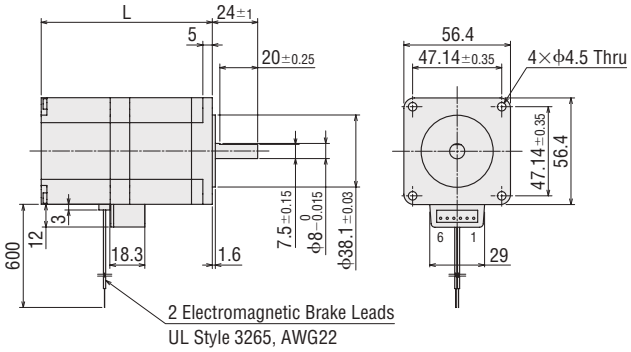

Connection Cable (Sold separately)

◇For Motor

Product Name	Length L (m)
LC2B06C	0.6

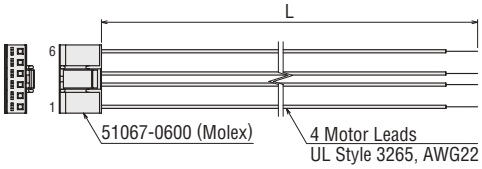

Inner Wiring Diagram of Motor

Wiring Diagram No.: ③

● Refer to page 07-85 for inner wiring diagram of motor.

Click Here
For more information, please visit ORIENTAL MOTOR Website:
https://www.orientalmotor.com.sg/om/tp/index.html

Standard Type Frame Size 60 mm (Unipolar 6 lead wires)

Specifications

Product Name	Maximum Holding Torque N·m	Rotor Inertia J: kg·m^2	Rated Current A/Phase	Voltage VDC	Winding Resistance Ω/Phase	Inductance mH/Phase	Basic Step Angle
PK264J□	0.75	280×10^{-7}	2	2.9	1.46	1.8	1.8°
PK266J□	1.35	450×10^{-7}		4	2	3.05	
PK267J□	1.7	570×10^{-7}		4.8	2.4	3.54	
PK269J□	2.2	900×10^{-7}		6	2.98	5.7	

● Either **A** (Single Shaft) or **B** (Double Shaft) indicating the configuration is specified where the box □ is located in the product name.

Speed – Torque Characteristics (Reference values)

PK264JA/PK264JB

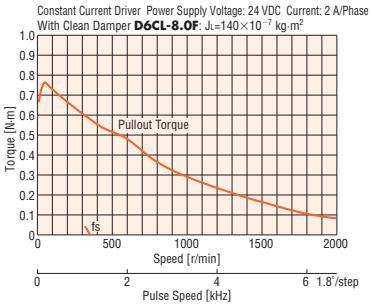

PK266JA/PK266JB

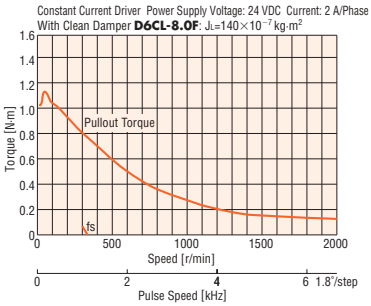

PK267JA/PK267JB

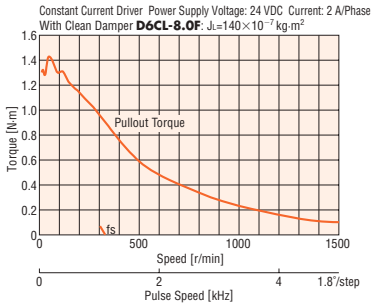

PK269JA/PK269JB

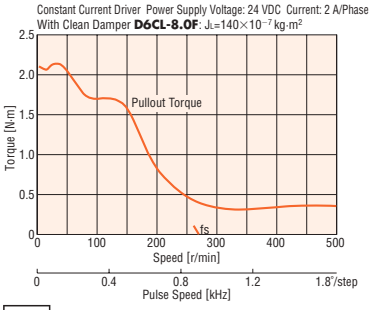

Note

● Data for the speed – torque characteristics is based on Oriental Motor's internal measurement conditions. If the conditions are changed, the characteristics may also change as a result.

● If there is a "clean damper" entry in the speed – torque characteristics, the data is for a double shaft motor when a clean damper is equipped.

● Depending on the driving conditions, a considerable amount of heat may be generated by the motor. Be sure to keep the motor case temperature at 100°C or less.

Dimensions (Unit: mm)

Motor

2D & 3D CAD

Product Name	L1	L2	Mass kg	2D CAD
PK264JA	43.5	–	0.6	B279
PK264JB		66.5		
PK266JA	54	–	0.83	B232
PK266JB		77		
PK267JA	65	–	1.02	B233
PK267JB		88		
PK269JA	85	–	1.43	B280
PK269JB		108		

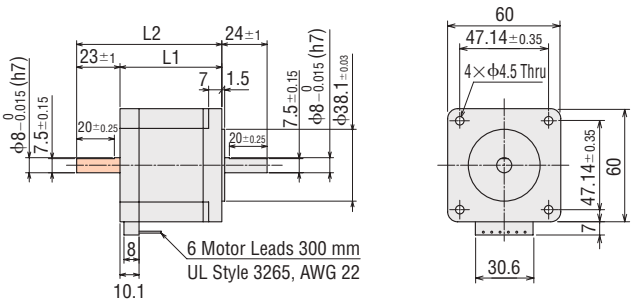

● These dimensions are for double shaft motors.
For single shaft motors, ignore the shaded ▭ areas.

Inner Wiring Diagram of Motor

Wiring Diagram No.: ⑦

● Refer to page 07-85 for inner wiring diagram of motor.

Standard Type Frame Size 60 mm (Bipolar 4 lead wires)

Specifications

Product Name	Maximum Holding Torque N·m	Rotor Inertia J: kg·m^2	Rated Current A/Phase	Voltage VDC	Winding Resistance Ω/Phase	Inductance mH/Phase	Basic Step Angle
PK264JD□	1.06	280×10^{-7}	2.8	2.1	0.73	1.8	1.8°
PK266JD□	1.75	450×10^{-7}		2.8	1	3.05	
PK267JD□	2.2	570×10^{-7}		3.4	1.2	3.54	
PK269JD□	3.1	900×10^{-7}		4.2	1.49	5.7	

● Either **A** (Single Shaft) or **B** (Double Shaft) indicating the configuration is specified where the box □ is located in the product name.

Speed – Torque Characteristics (Reference values)

PK264JDA/PK264JDB

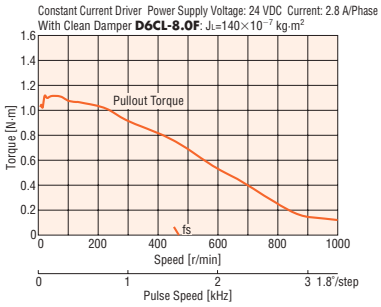

PK266JDA/PK266JDB

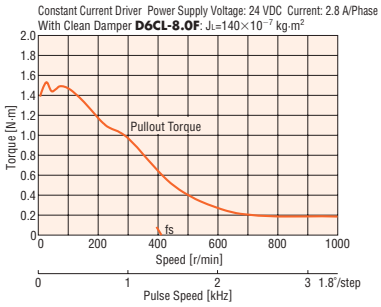

PK267JDA/PK267JDB

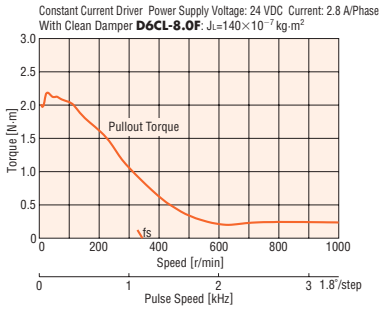

PK269JDA/PK269JDB

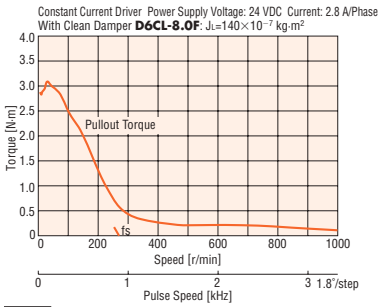

Note

● Data for the speed – torque characteristics is based on Oriental Motor's internal measurement conditions. If the conditions are changed, the characteristics may also change as a result.

● If there is a "clean damper" entry in the speed – torque characteristics, the data is for a double shaft motor when a clean damper is equipped.

● Depending on the driving conditions, a considerable amount of heat may be generated by the motor. Be sure to keep the motor case temperature at 100°C or less.

Dimensions (Unit: mm)

Motor

2D & 3D CAD

Product Name	L1	L2	Mass kg	2D CAD
PK264JDA	43.5	–	0.6	B279
PK264JDB		66.5		
PK266JDA	54	–	0.83	B232
PK266JDB		77		
PK267JDA	65	–	1.02	B233
PK267JDB		88		
PK269JDA	85	–	1.43	B280
PK269JDB		108		

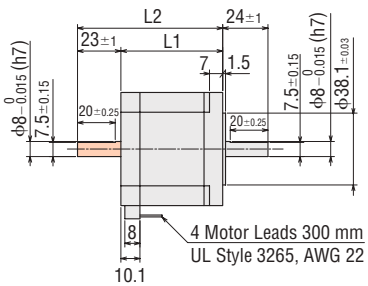

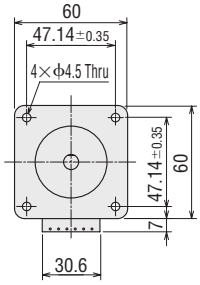

● These dimensions are for double shaft motors.
For single shaft motors, ignore the shaded areas.

Inner Wiring Diagram of Motor

Wiring Diagram No.: ⑤

● Refer to page 07-85 for inner wiring diagram of motor.

Standard Type Frame Size 85 mm (Unipolar 6 lead wires)

Specifications

Product Name	Maximum Holding Torque N·m	Rotor Inertia J: kg·m^2	Rated Current A/Phase	Voltage VDC	Winding Resistance Ω/Phase	Inductance mH/Phase	Basic Step Angle
PKP296U20□	2.6	1100×10^{-7}	2	4.4	2.2	7.8	1.8°
PKP296U30□			3	3	1.0	3.5	
PKP296U45□			4.5	2	0.45	1.6	
PKP299U20□	5.0	2200×10^{-7}	2	6.4	3.2	13.2	
PKP299U30□			3	4.5	1.5	6	
PKP299U45□			4.5	2.8	0.63	2.6	
PKP2913U20□	7.3	3400×10^{-7}	2	7.6	3.8	18	
PKP2913U40□			4	3.8	0.94	4.4	

● Either **A** (Single Shaft) or **B** (Double Shaft) indicating the configuration is specified where the box □ is located in the product name.

Speed – Torque Characteristics (Reference values)

PKP296U20A/PKP296U20B

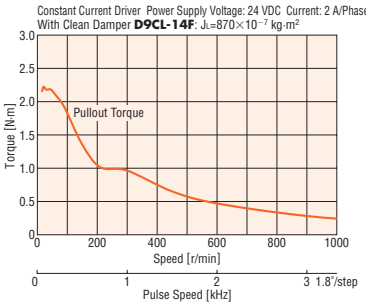

PKP299U20A/PKP299U20B

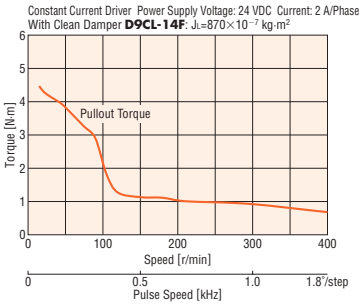

PKP2913U20A/PKP2913U20B

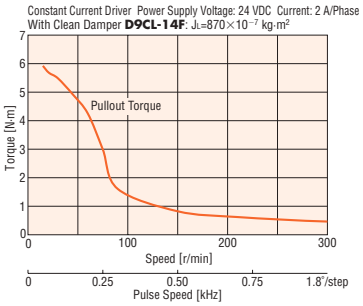

PKP296U30A/PKP296U30B

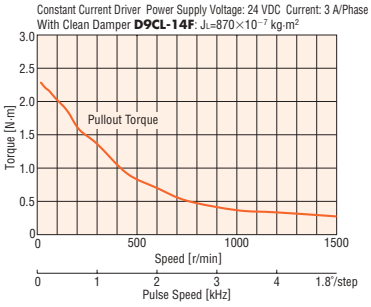

PKP299U30A/PKP299U30B

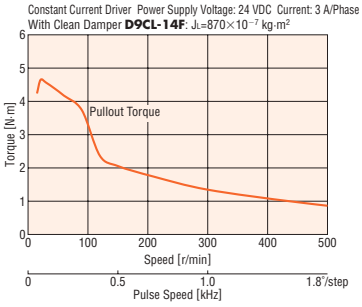

PKP2913U40A/PKP2913U40B

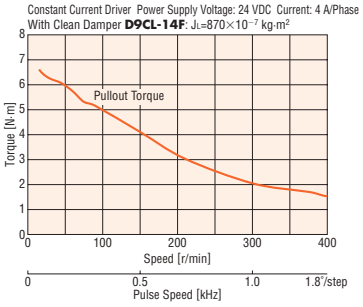

PKP296U45A/PKP296U45B

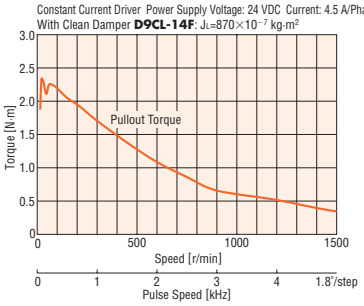

PKP299U45A/PKP299U45B

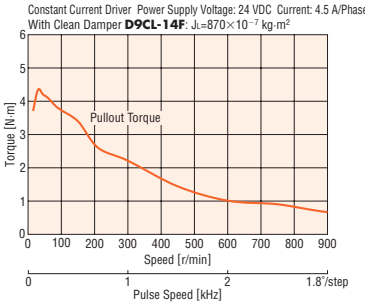

Note

● Data for the speed – torque characteristics is based on Oriental Motor's internal measurement conditions. If the conditions are changed, the characteristics may also change as a result.

● If there is a "clean damper" entry in the speed – torque characteristics, the data is for a double shaft motor when a clean damper is equipped.

● Depending on the driving conditions, a considerable amount of heat may be generated by the motor. Be sure to keep the motor case temperature at 100°C or less.

Dimensions (Unit: mm)

Motor

2D & 3D CAD

Product Name	L1	L2	Mass kg	2D CAD
PKP296U20A	66	–	1.8	B1246
PKP296U20B		100		
PKP296U30A		–		
PKP296U30B		100		
PKP296U45A		–		
PKP296U45B		100		
PKP299U20A	96	–	2.9	B1247
PKP299U20B		130		
PKP299U30A		–		
PKP299U30B		130		
PKP299U45A		–		
PKP299U45B		130		
PKP2913U20A	126	–	4	B1248
PKP2913U20B		160		
PKP2913U40A		–		
PKP2913U40B		160		

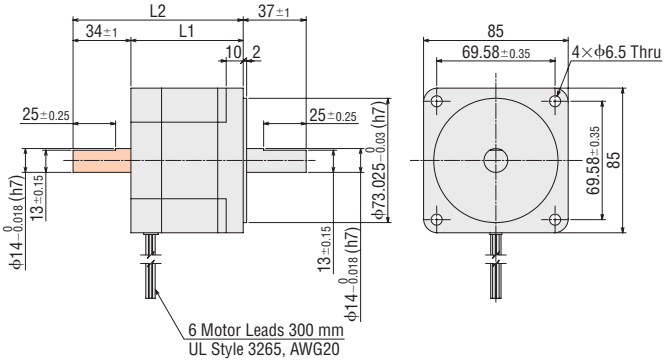

● These dimensions are for double shaft motors.
For single shaft motors, ignore the shaded ▭ areas.

Inner Wiring Diagram of Motor

Wiring Diagram No.: ⑦

● Refer to page 07-85 for inner wiring diagram of motor.

Click Here
For more information, please visit ORIENTAL MOTOR Website:
https://www.orientalmotor.com.sg/om/tp/index.html

Standard Type Frame Size 85 mm (Bipolar 4 lead wires)

Specifications

Product Name	Maximum Holding Torque N·m	Rotor Inertia J: kg·m^2	Rated Current A/Phase	Voltage VDC	Winding Resistance Ω/Phase	Inductance mH/Phase	Basic Step Angle	Recommended Driver Product Name*
PKP296D45□	3.3	1100×10^{-7}	4.5	1.9	0.42	3.1	1.8°	**CVD245BR-K**
PKP296D63□			6.3	1.4	0.23	1.6		–
PKP299D45□	6.4	2200×10^{-7}	4.5	2.7	0.6	5.4		**CVD245BR-K**
PKP299D63□			6.3	2	0.32	2.6		–
PKP2913D45□	9.5	3400×10^{-7}	4.5	3.5	0.78	6.9		**CVD245BR-K**
PKP2913D56□			5.6	2.6	0.47	4.4		–

● Either **A** (Single Shaft) or **B** (Double Shaft) indicating the configuration is specified where the box □ is located in the product name.

✻Refer to page 07-108 for details on the recommended driver.

Speed – Torque Characteristics (Reference values)

PKP296D45A/PKP296D45B

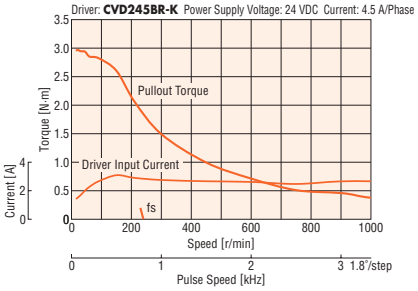

PKP299D45A/PKP299D45B

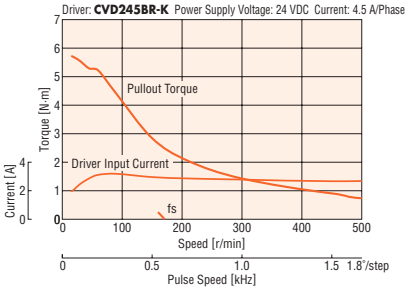

PKP2913D45A/PKP2913D45B

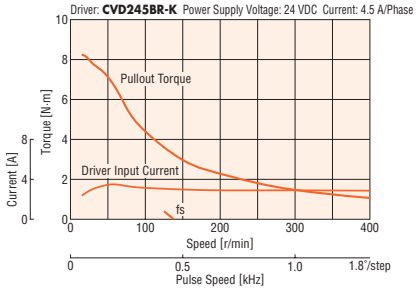

PKP296D63A/PKP296D63B

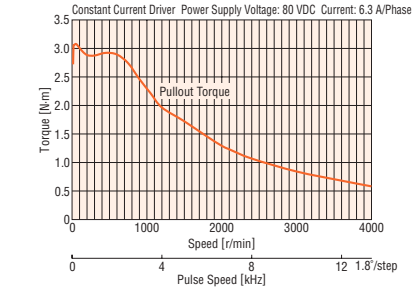

PKP299D63A/PKP299D63B

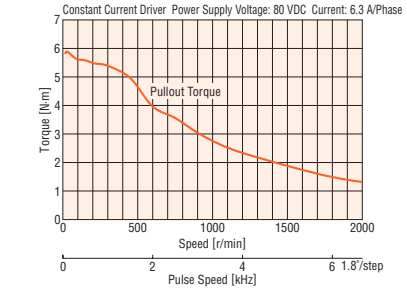

PKP2913D56A/PKP2913D56B

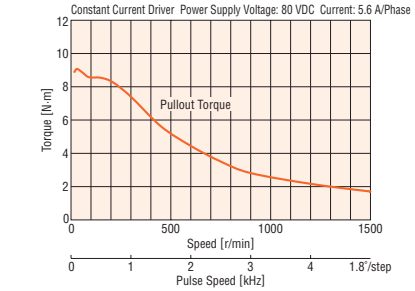

Note

● Data for the speed – torque characteristics is based on Oriental Motor's internal measurement conditions. If the conditions are changed, the characteristics may also change as a result.

● Depending on the driving conditions, a considerable amount of heat may be generated by the motor. Be sure to keep the motor case temperature at 100°C or less.

Dimensions (Unit: mm)

Motor

2D & 3D CAD

Product Name	L1	L2	Mass kg	2D CAD
PKP296D45A	66	–	1.8	B1237
PKP296D45B		100		
PKP296D63A		–		
PKP296D63B		100		
PKP299D45A	96	–	2.9	B1238
PKP299D45B		130		
PKP299D63A		–		
PKP299D63B		130		
PKP2913D45A	126	–	4	B1239
PKP2913D45B		160		
PKP2913D56A		–		
PKP2913D56B		160		

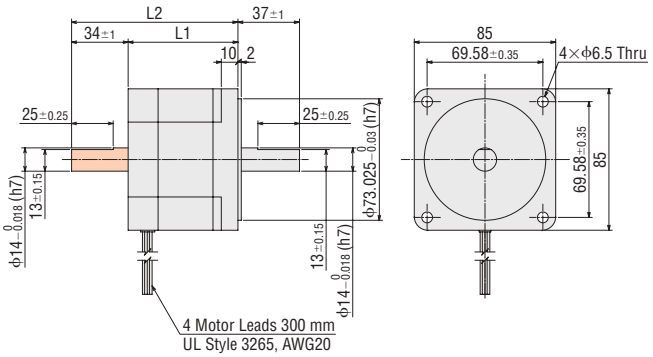

● These dimensions are for double shaft motors.
For single shaft motors, ignore the shaded ▭ areas.

Inner Wiring Diagram of Motor

Wiring Diagram No.: ⑤

● Refer to page 07-85 for inner wiring diagram of motor.

Click Here
For more information, please visit ORIENTAL MOTOR Website:
https://www.orientalmotor.com.sg/om/tp/index.html

High-Resolution Type Frame Size 42 mm (Unipolar 6 lead wires)

Specifications

Product Name	Maximum Holding Torque N·m	Rotor Inertia J: kg·m^2	Rated Current A/Phase	Voltage VDC	Winding Resistance Ω/Phase	Inductance mH/Phase	Basic Step Angle	Recommended Driver Product Name*
PKP243MU09□	0.25	36×10^{-7}	0.95	4.47	4.7	6.6	0.9°	**CMD2109P**
PKP244MU12□	0.35	57×10^{-7}	1.2	4.8	4	6		**CMD2112P**

● Either **A** (single shaft) or **B** (double shaft) indicating the configuration is specified where the box □ is located in the product name.
*Refer to page 07-112 for details on the recommended driver.

Speed – Torque Characteristics (Reference values)

PKP243MU09A/PKP243MU09B

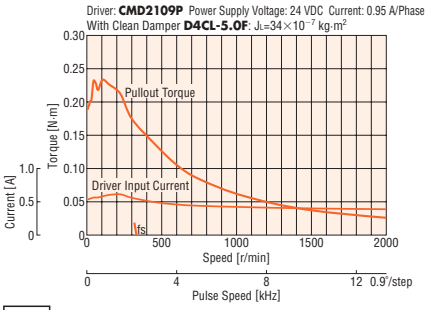

PKP244MU12A/PKP244MU12B

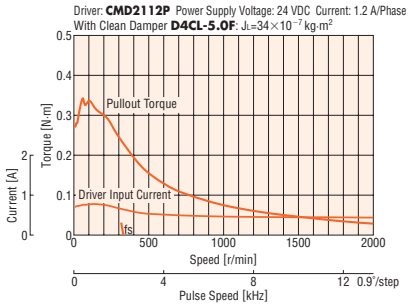

Note

● Data for the speed – torque characteristics is based on Oriental Motor's internal measurement conditions. If the conditions are changed, the characteristics may also change as a result.
● If there is a "clean damper" entry in the speed – torque characteristics, the data is for a double shaft motor when a clean damper is equipped.
● Depending on the driving conditions, a considerable amount of heat may be generated by the motor. Be sure to keep the motor case temperature at 100°C or less.

Dimensions (Unit: mm)

Motor

2D & 3D CAD

Product Name	L1	L2	Mass kg	2D CAD
PKP243MU09A	33	–	0.25	B968
PKP243MU09B		48		
PKP244MU12A	39	–	0.3	B969
PKP244MU12B		54		

● Applicable Connector
Connector housing: 51103-0600 (Molex)
Contact: 50351-8100 (Molex)
Crimp tool: 57295-5000 (Molex)

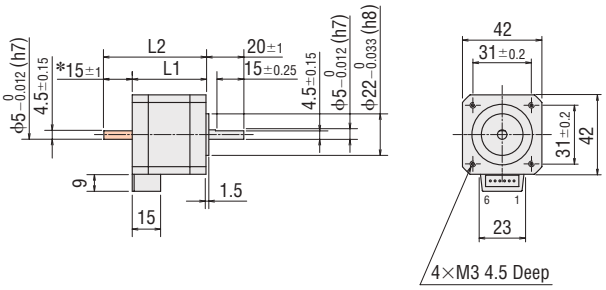

*The length of the shaft flat on the double shaft model is 15 ±0.25.
● These dimensions are for double shaft motors.
For single shaft motors, ignore the shaded ▭ areas.

Connection Cable (Sold separately)

◇For Motor

Product name	Length L (m)
LC2U06B	0.6
LC2U10B	1

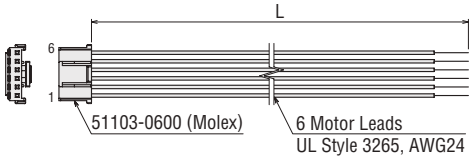

Inner Wiring Diagram of Motor

Wiring Diagram No.: ④

● Refer to page 07-85 for inner wiring diagram of motor.

High-Resolution Type Frame Size 42 mm (Bipolar 4 lead wires)

Specifications

Product Name	Maximum Holding Torque N·m	Rotor Inertia J: kg·m^2	Rated Current A/Phase	Voltage VDC	Winding Resistance Ω/Phase	Inductance mH/Phase	Basic Step Angle	Recommended Driver Product Name*
PKP243MD15□	0.30	36×10^{-7}	1.5	2.85	1.9	6.6	0.9°	**CVD215BR-K**
PKP244MD15□	0.42	57×10^{-7}		3.9	2.6	7.6		

● Either **A** (single shaft) or **B** (double shaft) indicating the configuration is specified where the box □ is located in the product name.
✻Refer to page 07-108 for details on the recommended driver.

Speed – Torque Characteristics (Reference values)

PKP243MD15A/PKP243MD15B

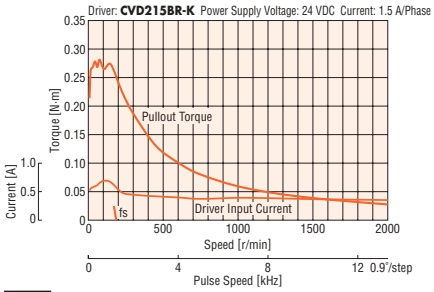

PKP244MD15A/PKP244MD15B

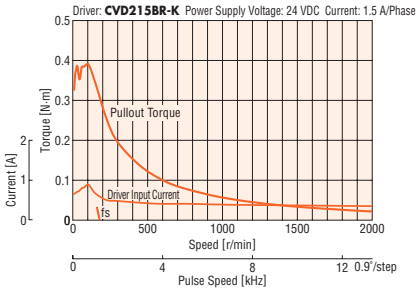

Note

● Data for the speed – torque characteristics is based on Oriental Motor's internal measurement conditions. If the conditions are changed, the characteristics may also change as a result.
● Depending on the driving conditions, a considerable amount of heat may be generated by the motor. Be sure to keep the motor case temperature at 100°C or less.

Dimensions (Unit: mm)

Motor

2D & 3D CAD

Product Name	L1	L2	Mass kg	2D CAD
PKP243MD15A	33	–	0.25	B968
PKP243MD15B		48		
PKP244MD15A	39	–	0.3	B969
PKP244MD15B		54		

● Applicable Connector
Connector housing: 51103-0600 (Molex)
Contact: 50351-8100 (Molex)
Crimp tool: 57295-5000 (Molex)

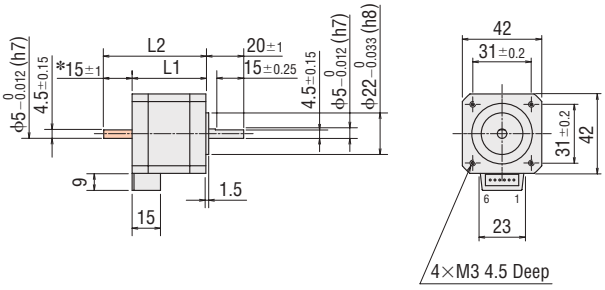

✻The length of the shaft flat on the double shaft model is 15 ±0.25.
● These dimensions are for double shaft motors.
For single shaft motors, ignore the shaded ▭ areas.

Connection Cable (Sold separately)

◇For Motor

Product Name	Length L (m)
LC2B06B	0.6

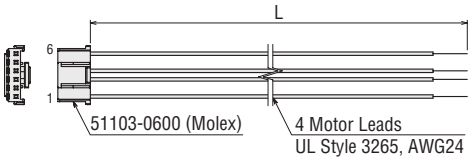

Inner Wiring Diagram of Motor

Wiring Diagram No.: ③

● Refer to page 07-85 for inner wiring diagram of motor.

High-Resolution Type with Encoder

Frame Size 42 mm (Unipolar 6 lead wires)

Specifications

Product Name	Maximum Holding Torque N·m	Rotor Inertia J: kg·m^2	Rated Current A/Phase	Voltage VDC	Winding Resistance Ω/Phase	Inductance mH/Phase	Basic Step Angle	Recommended Driver Product Name*
PKP243MU09A-R2FL	0.25	36×10^{-7}	0.95	4.47	4.7	6.6	0.9°	**CMD2109P**
PKP244MU12A-R2FL	0.35	57×10^{-7}	1.2	4.8	4	6		**CMD2112P**

● Refer to page 07-82 for encoder specifications.

*Refer to page 07-112 for details on the recommended driver.

Speed – Torque Characteristics (Reference values)

PKP243MU09A-R2FL

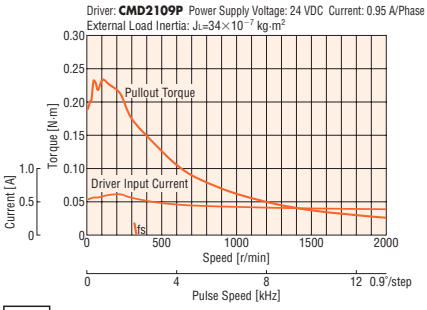

PKP244MU12A-R2FL

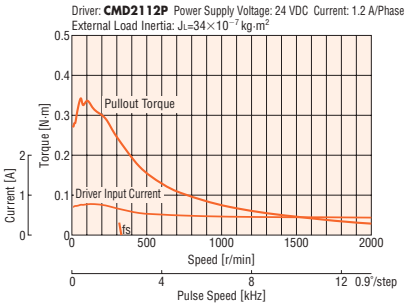

Note

● Data for the speed – torque characteristics is based on Oriental Motor's internal measurement conditions. If the conditions are changed, the characteristics may also change as a result.

● The data in the speed – torque characteristics represents the use of an external load inertia.

● Depending on the driving conditions, a considerable amount of heat may be generated by the motor. To protect the encoder, be sure to keep the motor case temperature at 85°C max.

Dimensions (Unit: mm)

Motor

2D & 3D CAD

Product Name	L	Mass kg	2D CAD
PKP243MU09A-R2FL	46.5	0.26	B1104
PKP244MU12A-R2FL	52.5	0.31	B1105

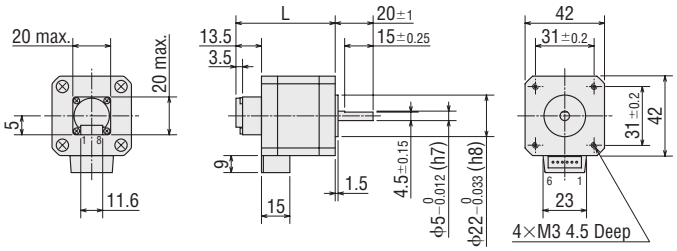

● Applicable Connector (Molex)

	Motor	Encoder
Connector Housing	51103-0600	51021-0800
Contact	50351-8100	50079-8100
Crimp Tool	57295-5000	57067-3000

Connection Cable (Sold separately)

◇For Motor

Product Name	Length L (m)
LC2U06B	0.6
LC2U10B	1

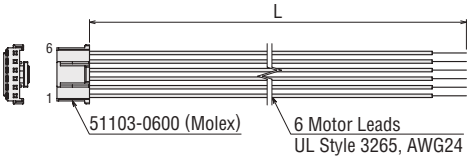

◇For Encoder

Product Name	Length L (m)
LCE08A-006	0.6

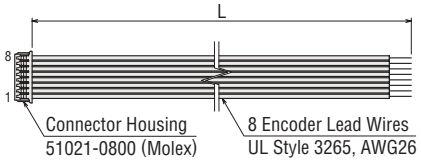

Inner Wiring Diagram of Motor

Wiring Diagram No.: ④

● Refer to page 07-85 for inner wiring diagram of motor.

High-Resolution Type with Encoder

Frame Size 42 mm (Bipolar 4 lead wires)

Specifications

Product Name	Maximum Holding Torque N·m	Rotor Inertia J: kg·m^2	Rated Current A/Phase	Voltage VDC	Winding Resistance Ω/Phase	Inductance mH/Phase	Basic Step Angle	Recommended Driver Product Name*
PKP243MD15A-R2FL	0.30	36×10^{-7}	1.5	2.85	1.9	6.6	0.9°	**CVD215BR-K**
PKP244MD15A-R2FL	0.42	57×10^{-7}		3.9	2.6	7.6		

● Refer to page 07-82 for encoder specifications.

*Refer to page 07-108 for details on the recommended driver.

Speed – Torque Characteristics (Reference values)

PKP243MD15A-R2FL

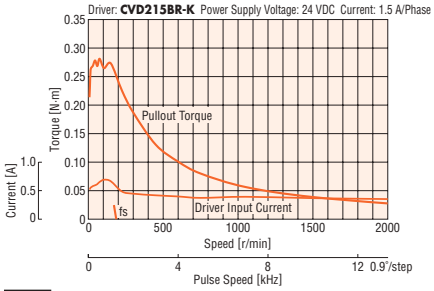

PKP244MD15A-R2FL

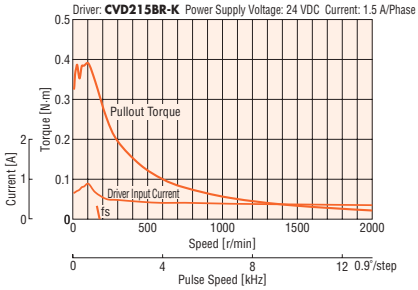

Note

● Data for the speed – torque characteristics is based on Oriental Motor's internal measurement conditions. If the conditions are changed, the characteristics may also change as a result.

● Depending on the driving conditions, a considerable amount of heat may be generated by the motor. To protect the encoder, be sure to keep the motor case temperature at 85°C max.

Dimensions (Unit: mm)

Motor

2D & 3D CAD

Product Name	L	Mass kg	2D CAD
PKP243MD15A-R2FL	46.5	0.26	B1104
PKP244MD15A-R2FL	52.5	0.31	B1105

● Applicable Connector (Molex)

	Motor	Encoder
Connector Housing	51103-0600	51021-0800
Contact	50351-8100	50079-8100
Crimp Tool	57295-5000	57067-3000

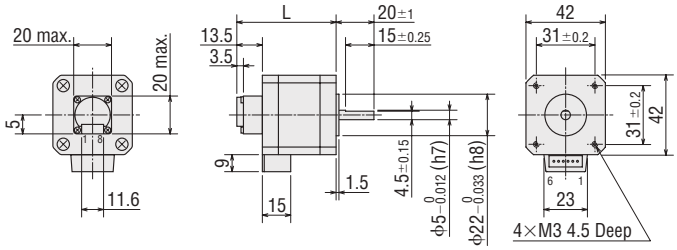

Connection Cable (Sold separately)

◇For Motor

Product Name	Length L (m)
LC2B06B	0.6

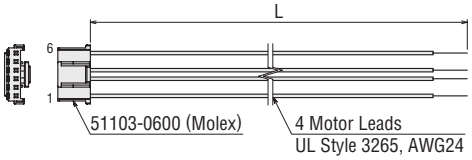

◇For Encoder

Product Name	Length L (m)
LCE08A-006	0.6

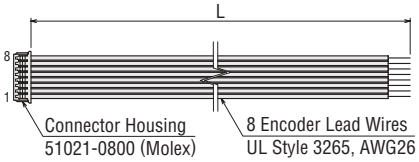

Inner Wiring Diagram of Motor

Wiring Diagram No.: ③

● Refer to page 07-85 for inner wiring diagram of motor.

High-Resolution Type with Electromagnetic Brake

Frame Size 42 mm (Unipolar 6 lead wires)

Specifications

Product Name	Maximum Holding Torque N·m	Rotor Inertia J: kg·m^2	Rated Current A/Phase	Voltage VDC	Winding Resistance Ω/Phase	Inductance mH/Phase	Basic Step Angle	Electromagnetic Brake Static Friction Torque N·m
PKP243MU09M	0.25	48×10^{-7}	0.95	4.47	4.7	6.6	0.9°	0.3
PKP244MU12M	0.35	69×10^{-7}	1.2	4.8	4	6		

● Refer to page 07-82 for electromagnetic brake specifications.

Speed – Torque Characteristics (Reference values)

PKP243MU09M

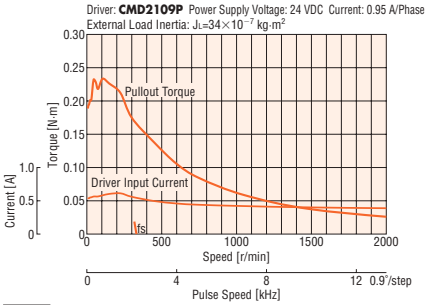

PKP244MU12M

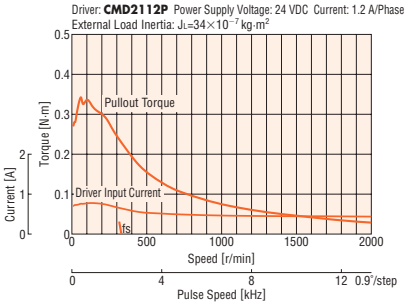

Note

● Data for the speed – torque characteristics is based on Oriental Motor's internal measurement conditions. If the conditions are changed, the characteristics may also change as a result.

● The data in the speed – torque characteristics represents the use of an external load inertia.

● Depending on the driving conditions, a considerable amount of heat may be generated by the motor. Be sure to keep the motor case temperature at 100°C or less.

Dimensions (Unit: mm)

Motor

2D & 3D CAD

Product Name	L	Mass kg	2D CAD
PKP243MU09M	67	0.36	B1136
PKP244MU12M	73	0.41	B1137

● Applicable Connector (Molex)
Connector housing: 51103-0600
Contact: 50351-8100
Crimp tool: 57295-5000

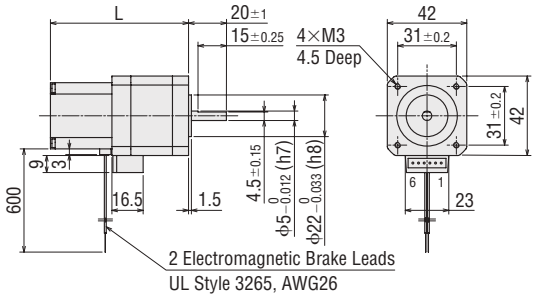

Connection Cable (Sold separately)

◇For Motor

Product Name	Length L (m)
LC2U06B	0.6
LC2U10B	1

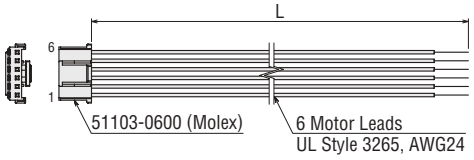

Inner Wiring Diagram of Motor

Wiring Diagram No.: ④

● Refer to page 07-85 for inner wiring diagram of motor.

High-Resolution Type with Electromagnetic Brake
Frame Size 42 mm (Bipolar 4 lead wires)

Specifications

Product Name	Maximum Holding Torque N·m	Rotor Inertia J: kg·m^2	Rated current A/Phase	Voltage VDC	Winding Resistance Ω/Phase	Inductance mH/Phase	Basic Step Angle	Electromagnetic Brake Static Friction Torque N·m
PKP243MD15M	0.30	48×10^{-7}	1.5	2.85	1.9	6.6	0.9°	0.3
PKP244MD15M	0.42	69×10^{-7}		3.9	2.6	7.6		

Refer to page 07-82 for electromagnetic brake specifications.

Speed – Torque Characteristics (Reference values)

PKP243MD15M

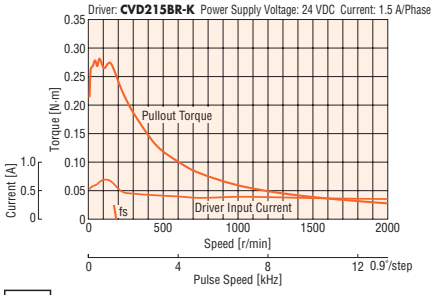

PKP244MD15M

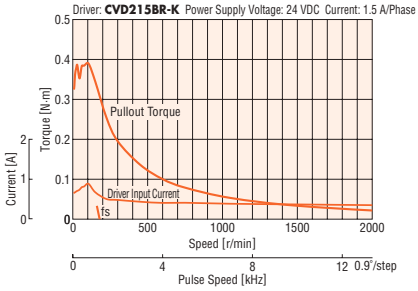

Note

- Data for the speed – torque characteristics is based on Oriental Motor's internal measurement conditions. If the conditions are changed, the characteristics may also change as a result.
- Depending on the driving conditions, a considerable amount of heat may be generated by the motor. Be sure to keep the motor case temperature at 100°C or less.

Dimensions (Unit: mm)

Motor

2D & 3D CAD

Product name	L	Mass kg	2D CAD
PKP243MD15M	67	0.36	B1136
PKP244MD15M	73	0.41	B1137

- Applicable Connector (Molex)
  Connector housing: 51103-0600
  Contact: 50351-8100
  Crimp tool: 57295-5000

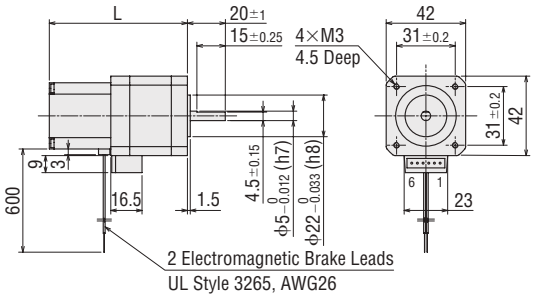

Connection Cable (Sold separately)

◇For Motor

Product Name	Length L (m)
LC2B06B	0.6

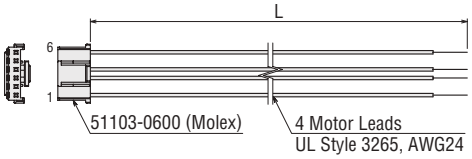

Inner Wiring Diagram of Motor

Wiring Diagram No.: ③

Refer to page 07-85 for inner wiring diagram of motor.

High-Resolution Type Frame Size 56.4 mm (Unipolar 6 lead wires)

Specifications

Product Name	Maximum Holding Torque N·m	Rotor Inertia J: kg·m^2	Rated Current A/Phase	Voltage VDC	Winding Resistance Ω/Phase	Inductance mH/Phase	Basic Step Angle	Recommended Driver Product Name*
PKP264MU20□	0.51	120×10^{-7}	2	2.9	1.45	2.1	0.9°	**CMD2120P**
PKP266MU20□	1.1	290×10^{-7}		4	2	3.9		
PKP268MU20□	1.75	490×10^{-7}		4.9	2.45	5.6		

● Either **A** (single shaft) or **B** (double shaft) indicating the configuration is specified where the box □ is located in the product name.
*Refer to page 07-112 for details on the recommended driver.

Speed – Torque Characteristics (Reference values)

PKP264MU20A/PKP264MU20B

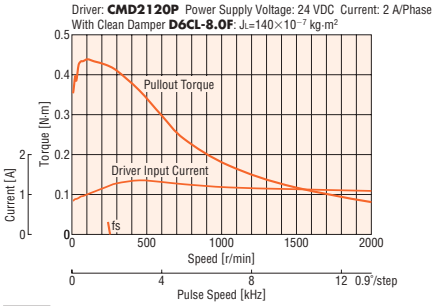

PKP266MU20A/PKP266MU20B

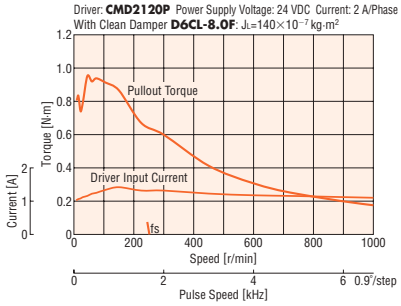

PKP268MU20A/PKP268MU20B

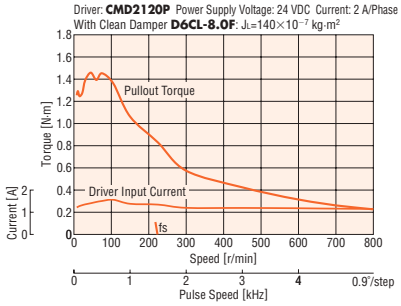

Note

● Data for the speed – torque characteristics is based on Oriental Motor's internal measurement conditions. If the conditions are changed, the characteristics may also change as a result.
● If there is a "clean damper" entry in the speed – torque characteristics, the data is for a double shaft motor when a clean damper is equipped.
● Depending on the driving conditions, a considerable amount of heat may be generated by the motor. Be sure to keep the motor case temperature at 100°C or less.

Dimensions (Unit: mm)

Motor

2D & 3D CAD

Product Name	L1	L2	Mass kg	2D CAD
PKP264MU20A	39	–	0.46	B972
PKP264MU20B		62		
PKP266MU20A	54	–	0.73	B973
PKP266MU20B		77		
PKP268MU20A	76	–	1.1	B974
PKP268MU20B		99		

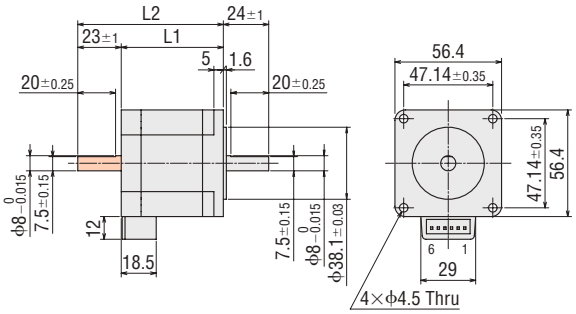

● These dimensions are for double shaft motors.
For single shaft motors, ignore the shaded areas.

● Applicable Connector
Connector housing: 51067-0600 (Molex)
Contact: 50217-9101 (Molex)
Crimp tool: 57189-5000 (Molex)
57190-5000 (Molex)

Connection Cable (Sold separately)

◇For Motor

Product Name	Length L (m)
LC2U06C	0.6
LC2U10C	1

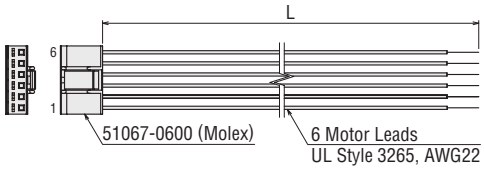

Inner Wiring Diagram of Motor

Wiring Diagram No.: ④

● Refer to page 07-85 for inner wiring diagram of motor.

High-Resolution Type Frame Size 56.4 mm (Bipolar 4 lead wires)

Specifications

Product Name	Maximum Holding Torque N·m	Rotor Inertia J: kg·m^2	Rated Current A/Phase	Voltage VDC	Winding Resistance Ω/Phase	Inductance mH/Phase	Basic Step Angle	Recommended Driver Product Name*
PKP264MD28□	0.6	120×10^{-7}	2.8	2	0.73	2.1	0.9°	**CVD228BR-K**
PKP266MD28□	1.32	290×10^{-7}		2.8	1	3.9		
PKP268MD28□	2.23	490×10^{-7}		3.4	1.23	5.6		

● Either **A** (single shaft) or **B** (double shaft) indicating the configuration is specified where the box □ is located in the product name.
*Refer to page 07-108 for details on the recommended driver.

Speed – Torque Characteristics (Reference values)

PKP264MD28A/PKP264MD28B

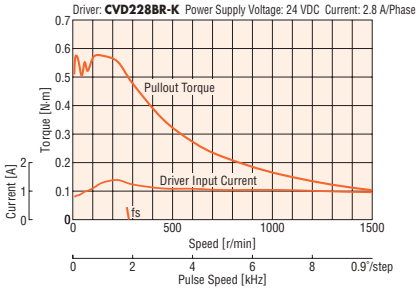

PKP266MD28A/PKP266MD28B

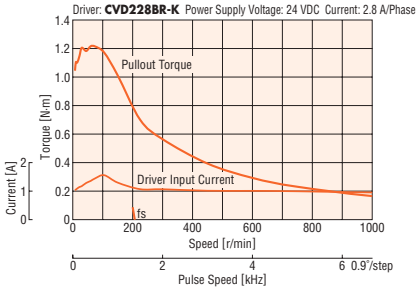

PKP268MD28A/PKP268MD28B

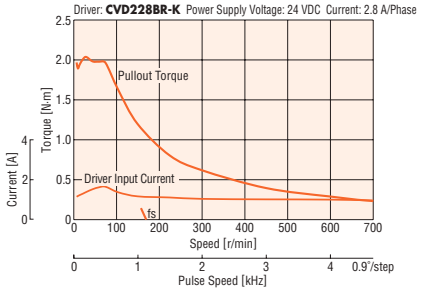

Note

● Data for the speed – torque characteristics is based on Oriental Motor's internal measurement conditions. If the conditions are changed, the characteristics may also change as a result.
● Depending on the driving conditions, a considerable amount of heat may be generated by the motor. Be sure to keep the motor case temperature at 100°C or less.

Dimensions (Unit: mm)

Motor

2D & 3D CAD

Product Name	L1	L2	Mass kg	2D CAD
PKP264MD28A	39	–	0.46	B972
PKP264MD28B		62		
PKP266MD28A	54	–	0.73	B973
PKP266MD28B		77		
PKP268MD28A	76	–	1.1	B974
PKP268MD28B		99		

● Applicable Connector
Connector housing: 51067-0600 (Molex)
Contact: 50217-9101 (Molex)
Crimp tool: 57189-5000 (Molex)
57190-5000 (Molex)

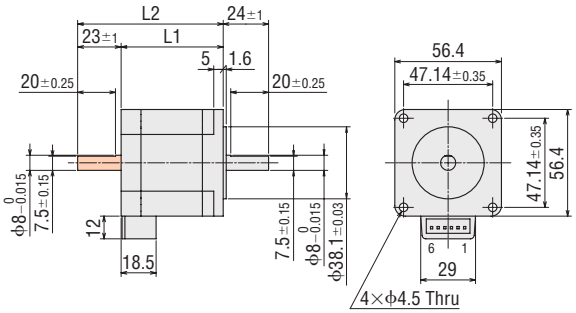

● These dimensions are for double shaft motors.
For single shaft motors, ignore the shaded ▭ areas.

Connection Cable (Sold separately)

◇For Motor

Product Name	Length L (m)
LC2B06C	0.6

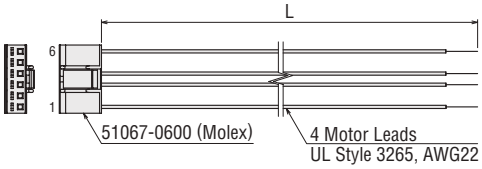

Inner Wiring Diagram of Motor

Wiring Diagram No.: ③

● Refer to page 07-85 for inner wiring diagram of motor.

High-Resolution Type with Encoder

Frame Size 56.4 mm (Unipolar 6 lead wires)

Specifications

Product Name	Maximum Holding Torque N·m	Rotor Inertia J: kg·m^2	Rated Current A/Phase	Voltage VDC	Winding Resistance Ω/Phase	Inductance mH/Phase	Basic Step Angle	Recommended Driver Product Name*
PKP264MU20A-R2FL	0.51	120×10^{-7}	2	2.9	1.45	2.1	0.9°	**CMD2120P**
PKP266MU20A-R2FL	1.1	290×10^{-7}		4	2	3.9		
PKP268MU20A-R2FL	1.75	490×10^{-7}		4.9	2.45	5.6		

● Refer to page 07-82 for encoder specifications.

*Refer to page 07-112 for details on the recommended driver.

Speed – Torque Characteristics (Reference values)

PKP264MU20A-R2FL

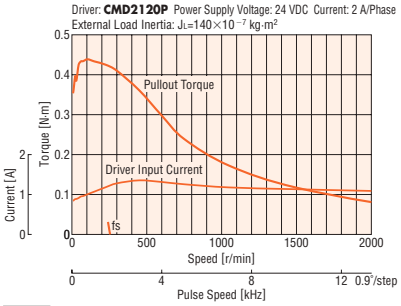

PKP266MU20A-R2FL

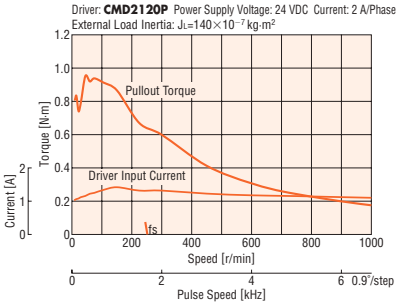

PKP268MU20A-R2FL

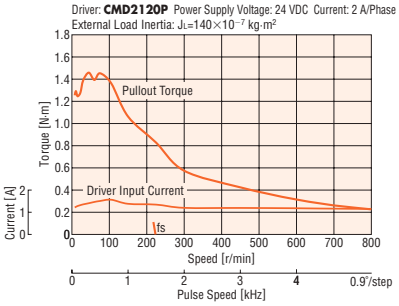

Note

● Data for the speed – torque characteristics is based on Oriental Motor's internal measurement conditions. If the conditions are changed, the characteristics may also change as a result.

● The data in the speed – torque characteristics represents the use of an external load inertia.

● Depending on the driving conditions, a considerable amount of heat may be generated by the motor. To protect the encoder, be sure to keep the motor case temperature at 85°C max.

Dimensions (Unit: mm)

Motor

2D & 3D CAD

Product Name	L	Mass kg	2D CAD
PKP264MU20A-R2FL	55.5	0.47	B1108
PKP266MU20A-R2FL	70.5	0.74	B1109
PKP268MU20A-R2FL	92.5	1.11	B1110

● Applicable Connector (Molex)

	Motor	Encoder
Connector Housing	51067-0600	51021-0800
Contact	50217-9101	50079-8100
Crimp Tool	57189-5000 57190-5000	57067-3000

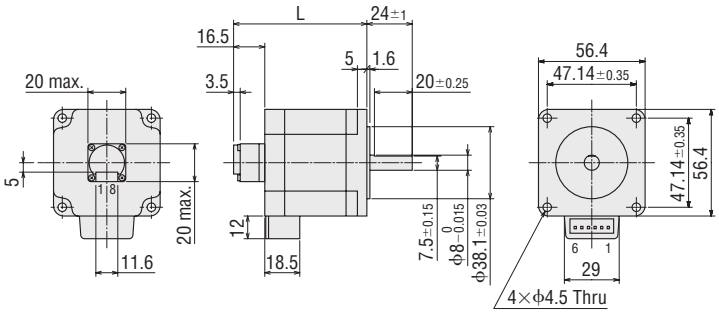

Connection Cable (Sold separately)

◇For Motor

Product Name	Length L (m)
LC2U06C	0.6
LC2U10C	1

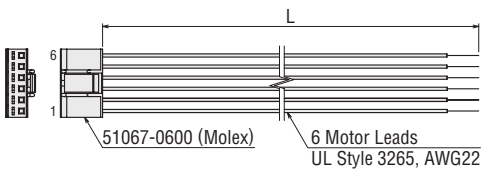

◇For Encoder

Product Name	Length L (m)
LCE08A-006	0.6

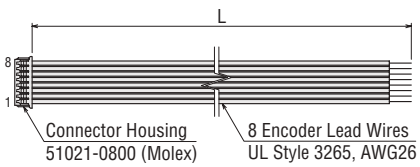

Inner Wiring Diagram of Motor

Wiring Diagram No.: ④

● Refer to page 07-85 for inner wiring diagram of motor.

High-Resolution Type with Encoder

Frame Size 56.4 mm (Bipolar 4 lead wires)

Specifications

Product Name	Maximum Holding Torque N·m	Rotor Inertia J: kg·m^2	Rated Current A/Phase	Voltage VDC	Winding Resistance Ω/Phase	Inductance mH/Phase	Basic Step Angle	Recommended Driver Product Name*
PKP264MD28A-R2FL	0.6	120×10^{-7}	2.8	2	0.73	2.1	0.9°	**CVD228BR-K**
PKP266MD28A-R2FL	1.32	290×10^{-7}		2.8	1	3.9		
PKP268MD28A-R2FL	2.23	490×10^{-7}		3.4	1.23	5.6		

● Refer to page 07-82 for encoder specifications.

*Refer to page 07-108 for details on the recommended driver.

Speed – Torque Characteristics (Reference values)

PKP264MD28A-R2FL

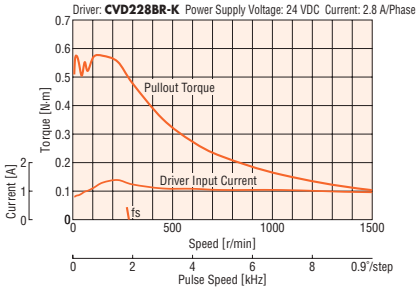

PKP266MD28A-R2FL

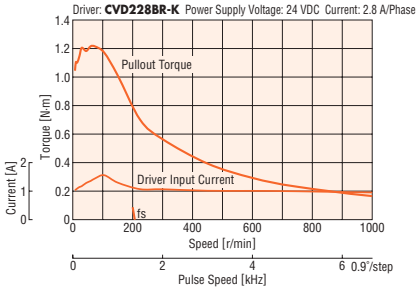

PKP268MD28A-R2FL

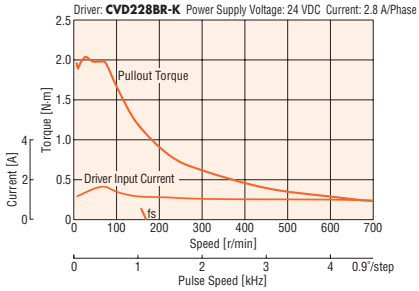

Note

● Data for the speed – torque characteristics is based on Oriental Motor's internal measurement conditions. If the conditions are changed, the characteristics may also change as a result.

● Depending on the driving conditions, a considerable amount of heat may be generated by the motor. To protect the encoder, be sure to keep the motor case temperature at 85°C max.

Dimensions (Unit: mm)

Motor

2D & 3D CAD

Product Name	L	Mass kg	2D CAD
PKP264MD28A-R2FL	55.5	0.47	B1108
PKP266MD28A-R2FL	70.5	0.74	B1109
PKP268MD28A-R2FL	92.5	1.11	B1110

● Applicable Connector (Molex)

	Motor	Encoder
Connector Housing	51067-0600	51021-0800
Contact	50217-9101	50079-8100
Crimp Tool	57189-5000 57190-5000	57067-3000

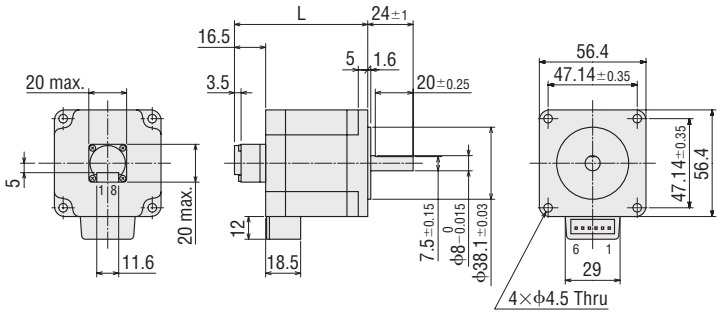

Connection Cable (Sold separately)

◇For Motor

Product Name	Length L (m)
LC2B06C	0.6

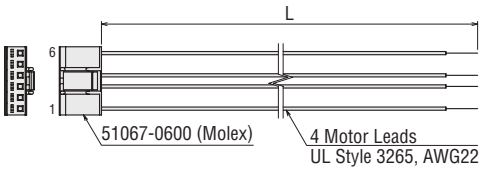

◇For Encoder

Product Name	Length L (m)
LCE08A-006	0.6

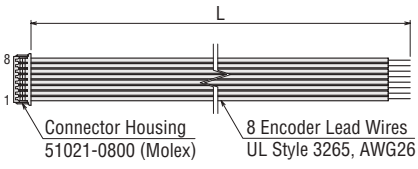

Inner Wiring Diagram of Motor

Wiring Diagram No.: ③

● Refer to page 07-85 for inner wiring diagram of motor.

High-Resolution Type with Electromagnetic Brake

Frame Size 56.4 mm (Unipolar 6 lead wires)

Specifications

Product Name	Maximum Holding Torque N·m	Rotor Inertia J: kg·m^2	Rated Current A/Phase	Voltage VDC	Winding Resistance Ω/Phase	Inductance mH/Phase	Basic Step Angle	Electromagnetic brake Static friction torque N·m
PKP264MU20M	0.51	270×10^{-7}	2	2.9	1.45	2.1	0.9°	1.5
PKP266MU20M	1.1	440×10^{-7}		4	2	3.9		
PKP268MU20M	1.75	640×10^{-7}		4.9	2.45	5.6		

● Refer to page 07-82 for electromagnetic brake specifications.

Speed – Torque Characteristics (Reference values)

PKP264MU20M

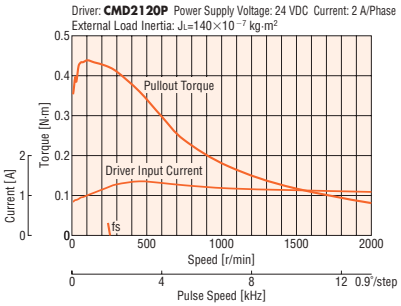

PKP266MU20M

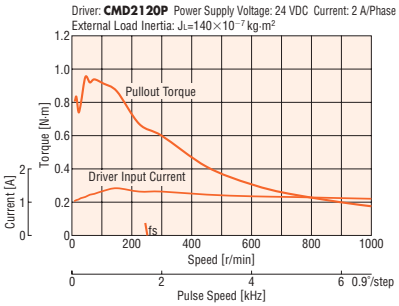

PKP268MU20M

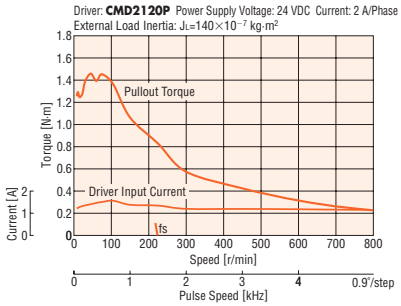

Note

- Data for the speed – torque characteristics is based on Oriental Motor's internal measurement conditions. If the conditions are changed, the characteristics may also change as a result.
- The data in the speed – torque characteristics represents the use of an external load inertia.
- Depending on the driving conditions, a considerable amount of heat may be generated by the motor. Be sure to keep the motor case temperature at 100°C or less.

Dimensions (Unit: mm)

Motor

2D & 3D CAD

Product Name	L	Mass kg	2D CAD
PKP264MU20M	75.5	0.76	B1140
PKP266MU20M	90.5	1.03	B1141
PKP268MU20M	112.5	1.4	B1142

- Applicable Connector (Molex)
  Connector housing: 51067-0600
  Contact: 50217-9101
  Crimp tool: 57189-5000
  57190-5000

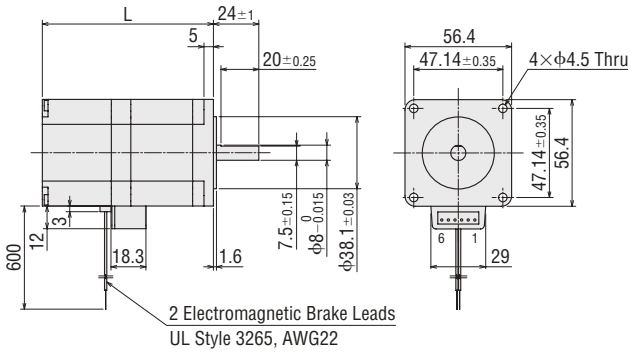

Connection Cable (Sold separately)

◇For Motor

Product Name	Length L (m)
LC2U06C	0.6
LC2U10C	1

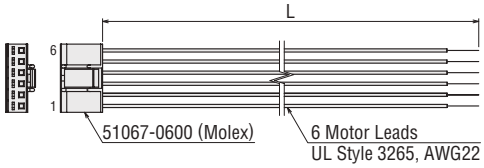

Inner Wiring Diagram of Motor

Wiring Diagram No.: ④

● Refer to page 07-85 for inner wiring diagram of motor.

High-Resolution Type with Electromagnetic Brake

Frame Size 56.4 mm (Bipolar 4 lead wires)

Specifications

Product Name	Maximum Holding Torque N·m	Rotor Inertia J: kg·m^2	Rated Current A/Phase	Voltage VDC	Winding Resistance Ω/Phase	Inductance mH/Phase	Basic Step Angle	Electromagnetic brake Static friction torque N·m
PKP264MD28M	0.6	270×10^{-7}	2.8	2	0.73	2.1	0.9°	1.5
PKP266MD28M	1.32	440×10^{-7}		2.8	1	3.9		
PKP268MD28M	2.23	640×10^{-7}		3.4	1.23	5.6		

● Refer to page 07-82 for electromagnetic brake specifications.

Speed – Torque Characteristics (Reference values)

PKP264MD28M

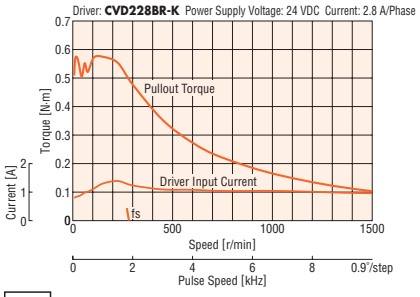

PKP266MD28M

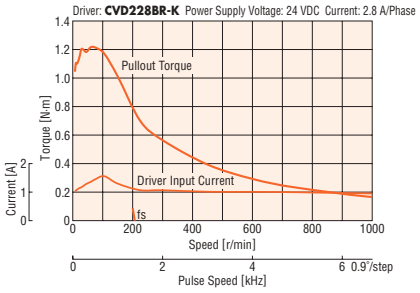

PKP268MD28M

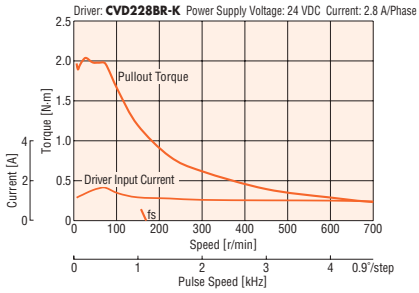

Note

- Data for the speed – torque characteristics is based on Oriental Motor's internal measurement conditions. If the conditions are changed, the characteristics may also change as a result.
- Depending on the driving conditions, a considerable amount of heat may be generated by the motor. Be sure to keep the motor case temperature at 100°C or less.

Dimensions (Unit: mm)

Motor

2D & 3D CAD

Product Name	L	Mass kg	2D CAD
PKP264MD28M	75.5	0.76	B1140
PKP266MD28M	90.5	1.03	B1141
PKP268MD28M	112.5	1.4	B1142

- Applicable Connector (Molex)
  Connector housing: 51067-0600
  Contact: 50217-9101
  Crimp tool: 57189-5000
  57190-5000

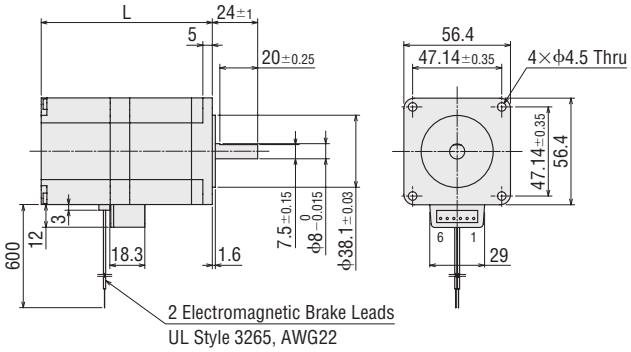

Connection Cable (Sold separately)

◇For Motor

Product Name	Length L (m)
LC2B06C	0.6

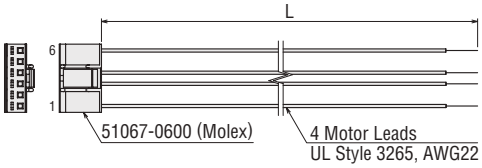

Inner Wiring Diagram of Motor

Wiring Diagram No.: ③

● Refer to page 07-85 for inner wiring diagram of motor.

Click Here
For more information, please visit ORIENTAL MOTOR Website:
https://www.orientalmotor.com.sg/om/tp/index.html

Flat Type Frame Size 42 mm (Bipolar 4 lead wires) NEW

Specifications

Product Name	Maximum Holding Torque N·m	Rotor Inertia J: kg·m^2	Rated Current A/Phase	Voltage VDC	Winding Resistance Ω/Phase	Inductance mH/Phase	Basic Step Angle	Recommended Driver Product Name*
PKP242D23A2	0.1	13×10^{-7}	2.3	1.4	0.61	0.53	1.8°	**CVD223FBR-K**

*Refer to page 07-108 for details on the recommended driver.

Speed – Torque Characteristics (Reference values)

PKP242D23A2

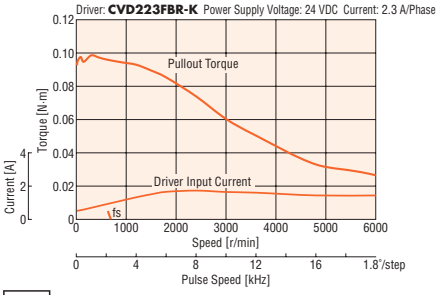

Note

- Data for the speed – torque characteristics is based on Oriental Motor's internal measurement conditions. If the conditions are changed, the characteristics may also change as a result.
- Depending on the driving conditions, a considerable amount of heat may be generated by the motor. Be sure to keep the motor case temperature at 100°C or less.
- Set the driver current to be less than or equal to the rated current of the motor.

Dimensions (Unit: mm)

Motor

2D & 3D CAD

Product Name	Mass kg	2D CAD
PKP242D23A2	0.11	B1355

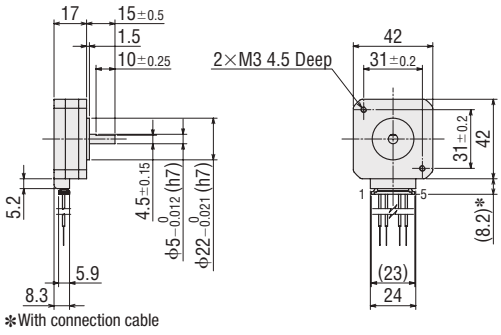

*With connection cable

- Applicable Connector
  Connector Housing: MDF97-5S-3.5C (HIROSE ELECTRIC CO., LTD.)
  Contact: MDF97-22SC (HIROSE ELECTRIC CO., LTD.)
  Crimp Tool: HT801/MDF97-22S (HIROSE ELECTRIC CO., LTD.)

Connection Cable (Sold separately)

◇For Motor

Product Name	Length L (m)
LC2B06E	0.6

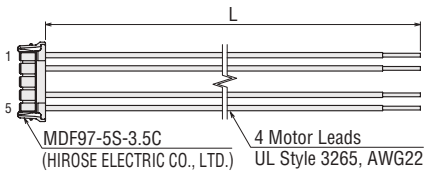

Inner Wiring Diagram of Motor

Wiring Diagram No.: ①

- Refer to page 07-85 for inner wiring diagram of motor.

Flat Type Frame Size 60 mm (Bipolar 4 lead wires)

Specifications

Product Name	Maximum Holding Torque N·m	Rotor Inertia J: kg·m^2	Rated Current A/Phase	Voltage VDC	Winding Resistance Ω/Phase	Inductance mH/Phase	Basic Step Angle	Recommended Driver Product Name*
PKP262FD15AW	0.18	68×10^{-7}	1.5	2.25	1.5	1.4	1.8°	**CVD215BR-K**

*Refer to page 07-108 for details on the recommended driver.

Speed – Torque Characteristics (Reference values)

PKP262FD15AW

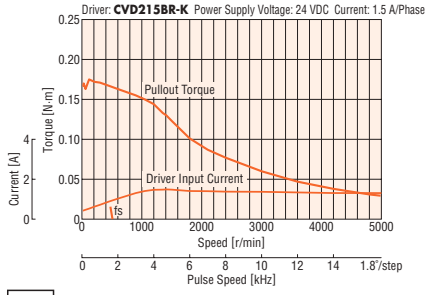

Note

- Data for the speed – torque characteristics is based on Oriental Motor's internal measurement conditions. If the conditions are changed, the characteristics may also change as a result.
- Depending on the driving conditions, a considerable amount of heat may be generated by the motor. Be sure to keep the motor case temperature at 100°C or less.

Dimensions (Unit: mm)

Motor

2D & 3D CAD

Product Name	Mass kg	2D CAD
PKP262FD15AW	0.2	B1170

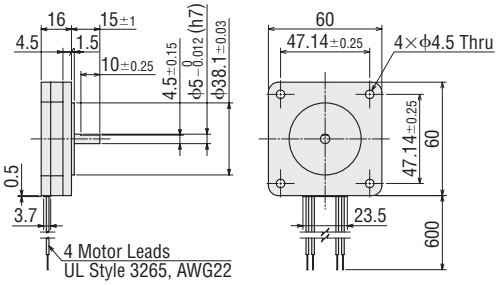

Inner Wiring Diagram of Motor

Wiring Diagram No.: ⑤

- Refer to page 07-85 for inner wiring diagram of motor.

Flat Type with Harmonic Gear NEW

Frame Size 51 mm (Bipolar 4 lead wires)

Specifications

Product Name	Maximum Holding Torque N·m	Rotor Inertia J: kg·m^2	Rated Current A/Phase	Voltage VDC	Winding Resistance Ω/Phase	Inductance mH/Phase	Basic Step Angle	Gear Ratio	Permissible Torque N·m	Maximum Instantaneous Torque N·m	Lost Motion (Load Torque) arcmin	Speed Range r/min	Recommended Driver Product Name*
PKP242D23A2-H50	1.8	17×10^{-7}	2.3	1.4	0.61	0.53	0.036°	50	1.8	3.3	1.5 max. (±0.59 N·m)	0~70	**CVD223FBR-K**
PKP242D23A2-H100	2.4						0.018°	100	2.4	4.8	1.5 max. (±0.78 N·m)	0~35	

*Refer to page 07-108 for details on the recommended driver.

Note

- The rotor inertia represents a sum of the inertia of the harmonic gear converted to motor shaft values.

Speed – Torque Characteristics (Reference values)

PKP242D23A2-H50

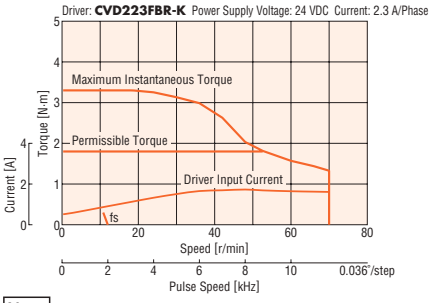

PKP242D23A2-H100

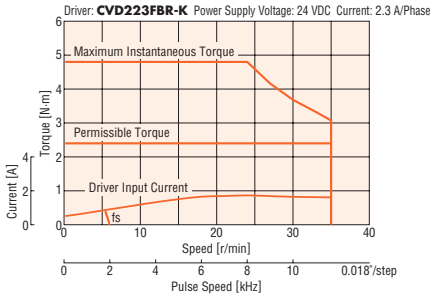

Note

- Data for the speed – torque characteristics is based on Oriental Motor's internal measurement conditions. If the conditions are changed, the characteristics may also change as a result.
- Depending on the driving conditions, a considerable amount of heat may be generated by the motor. Be sure to keep the motor case temperature at 100°C or less.
- Set the driver current to be less than or equal to the rated current of the motor.

Dimensions (Unit: mm)

Motor

2D & 3D CAD

Product Name	Mass kg	2D CAD
PKP242D23A2-H50	0.32	B1356
PKP242D23A2-H100		

- Applicable Connector
  Connector Housing: MDF97-5S-3.5C (HIROSE ELECTRIC CO., LTD.)
  Contact: MDF97-22SC (HIROSE ELECTRIC CO., LTD.)
  Crimp Tool: HT801/MDF97-22S (HIROSE ELECTRIC CO., LTD.)

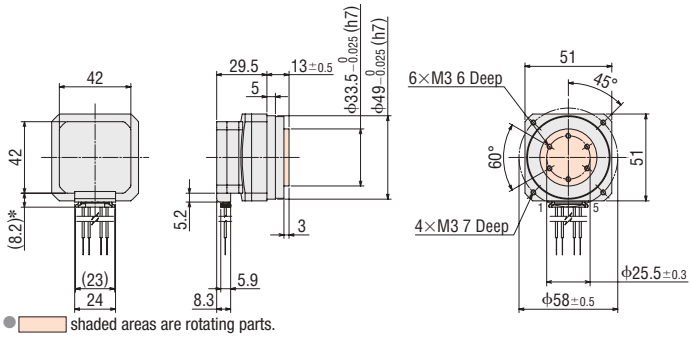

Connection Cable (Sold separately)

◇For Motor

Product Name	Length L (m)
LC2B06E	0.6

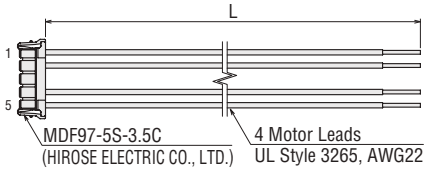

Inner Wiring Diagram of Motor

Wiring Diagram No.: ①

- Refer to page 07-85 for inner wiring diagram of motor.

Flat Type with Harmonic Gear

Frame Size ϕ72 mm (Bipolar 4 lead wires)

Specifications

Product Name	Maximum Holding Torque N·m	Rotor Inertia J: kg·m^2	Rated Current A/Phase	Voltage VDC	Winding Resistance Ω/Phase	Inductance mH/Phase	Basic Step Angle	Gear Ratio	Permissible Torque N·m	Maximum Instantaneous Torque N·m	Lost Motion (Load Torque) arcmin	Speed Range r/min	Recommended Driver Product Name*
PKP262FD15AW-H50	3.7	90×10^{-7}	1.5	1.65	1.1	0.8	0.036°	50	3.7	4.8	1.5 max. (±0.18 N·m)	0~70	**CVD215BR-K**
PKP262FD15AW-H100	5.4						0.018°	100	5.4	7.7	1.5 max. (±0.27 N·m)	0~35	

*Refer to page 07-108 for details on the recommended driver.

Note

- The rotor inertia represents a sum of the inertia of the harmonic gear converted to motor shaft values.

Speed – Torque Characteristics (Reference values)

PKP262FD15AW-H50

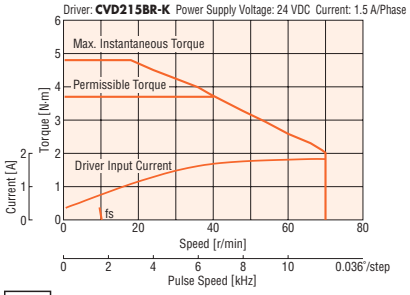

PKP262FD15AW-H100

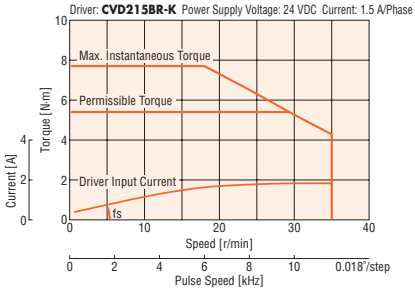

Note

- Data for the speed – torque characteristics is based on Oriental Motor's internal measurement conditions. If the conditions are changed, the characteristics may also change as a result.
- Depending on the driving conditions, a considerable amount of heat may be generated by the motor. Be sure to keep the motor case temperature at 100°C or less.

Dimensions (Unit: mm)

Motor

2D & 3D CAD

Product Name	Mass kg	2D CAD
PKP262FD15AW-H50	0.6	B1171
PKP262FD15AW-H100		

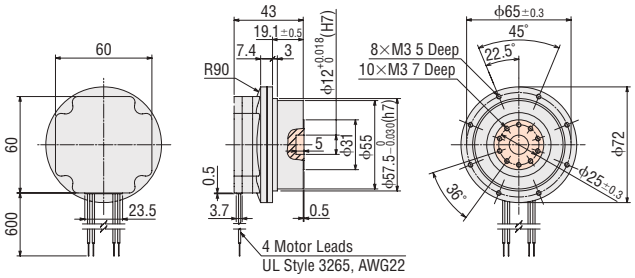

- shaded areas are rotating parts.

Inner Wiring Diagram of Motor

Wiring Diagram No.: ⑤

- Refer to page 07-85 for inner wiring diagram of motor.

SH Geared Type Frame Size 28 mm (Unipolar 6 lead wires)

Specifications

Product Name	Maximum Holding Torque N·m	Rotor Inertia J: kg·m²	Rated Current A/Phase	Voltage VDC	Winding Resistance Ω/Phase	Inductance mH/Phase	Basic Step Angle	Gear Ratio	Permissible Torque N·m	Speed Range r/min	Backlash arcmin	Recommended Driver Product Name*
PKP223U09□-SG7.2	0.3	9×10^{-7}	0.95	2.66	2.8	1	0.25°	7.2	0.3	0~416	90 (1.5°)	**CMD2109P**
PKP223U09□-SG9							0.2°	9		0~333		
PKP223U09□-SG10							0.18°	10		0~300		
PKP223U09□-SG18	0.4						0.1°	18	0.4	0~166		
PKP223U09□-SG36							0.05°	36		0~83		

●Either **A** (single shaft) or **B** (double shaft) indicating the configuration is specified where the box □ is located in the product name.

✻Refer to page 07-112 for details on the recommended driver.

Speed – Torque Characteristics (Reference values)

PKP223U09A-SG7.2/PKP223U09B-SG7.2

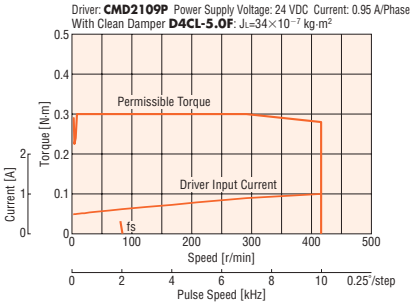

PKP223U09A-SG9/PKP223U09B-SG9

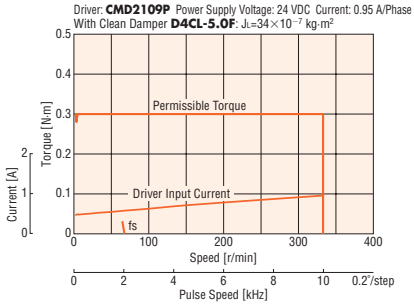

PKP223U09A-SG10/PKP223U09B-SG10

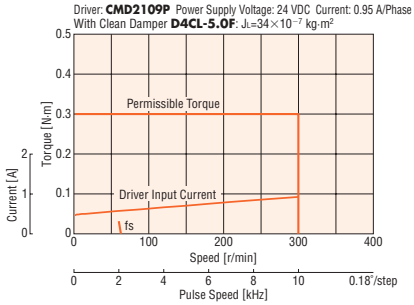

PKP223U09A-SG18/PKP223U09B-SG18

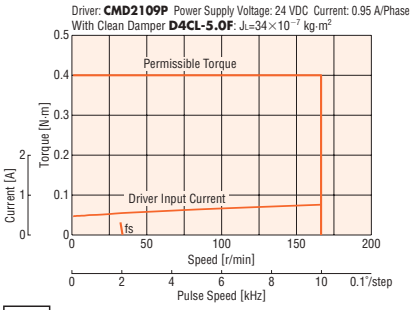

PKP223U09A-SG36/PKP223U09B-SG36

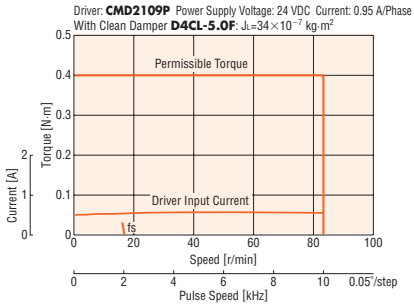

Note

●Data for the speed – torque characteristics is based on Oriental Motor's internal measurement conditions. If the conditions are changed, the characteristics may also change as a result.

●If there is a "clean damper" entry in the speed – torque characteristics, the data is for a double shaft motor when a clean damper is equipped.

●Depending on the driving conditions, a considerable amount of heat may be generated by the motor. Be sure to keep the motor case temperature at 100°C or less.

Dimensions (Unit: mm)

Motor

2D & 3D CAD

Product Name	Gear Ratio	Mass kg	2D CAD
PKP223U09A-SG□	**7.2, 9, 10, 18, 36**	0.16	B985
PKP223U09B-SG□			

●A number indicating the gear ratio is specified in the box □ in the product name.

●Applicable Connector

Connector housing: 51065-0600 (Molex)

Contact: 50212-8100 (Molex)

Crimp tool: 57176-5000 (Molex)

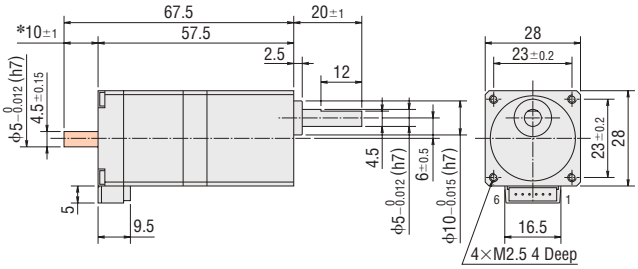

✻The length of the shaft flat on the double shaft model is 10±0.25.

●These dimensions are for double shaft motors.

For single shaft motors, ignore the shaded ▭ areas.

Connection Cable (Sold separately)

◇For Motor

Product Name	Length L (m)
LC2U06A	0.6
LC2U10A	1

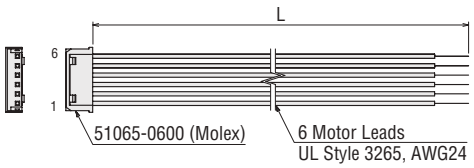

Inner Wiring Diagram of Motor

Wiring Diagram No.: ④

●Refer to page 07-85 for inner wiring diagram of motor.

SH Geared Type Frame Size 28 mm (Bipolar 4 lead wires)

Specifications

Product Name	Maximum Holding Torque N·m	Rotor Inertia J: kg·m^2	Rated Current A/Phase	Voltage VDC	Winding Resistance Ω/Phase	Inductance mH/Phase	Basic Step Angle	Gear Ratio	Permissible Torque N·m	Speed Range r/min	Backlash arcmin	Recommended Driver Product Name*
PKP223D15□-SG7.2	0.3	9×10^{-7}	1.5	1.8	1.2	0.74	0.25°	7.2	0.3	0~416	90 (1.5°)	**CVD215BR-K**
PKP223D15□-SG9							0.2°	9		0~333		
PKP223D15□-SG10							0.18°	10		0~300		
PKP223D15□-SG18	0.4						0.1°	18	0.4	0~166		
PKP223D15□-SG36							0.05°	36		0~83		

● Either **A** (single shaft) or **B** (double shaft) indicating the configuration is specified where the box □ is located in the product name.
✻Refer to page 07-108 for details on the recommended driver.

Speed – Torque Characteristics (Reference values)

PKP223D15A-SG7.2/PKP223D15B-SG7.2

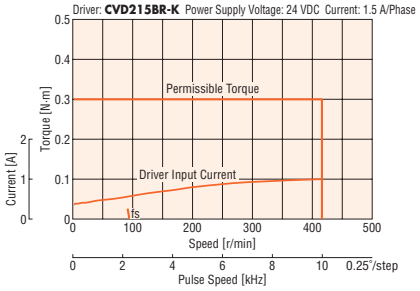

PKP223D15A-SG9/PKP223D15B-SG9

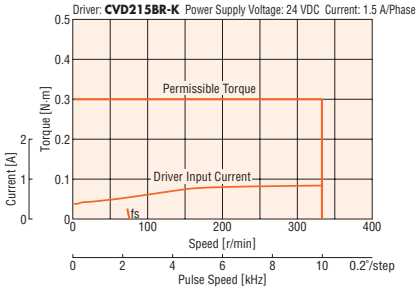

PKP223D15A-SG10/PKP223D15B-SG10

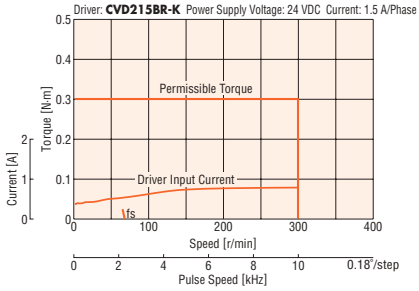

PKP223D15A-SG18/PKP223D15B-SG18

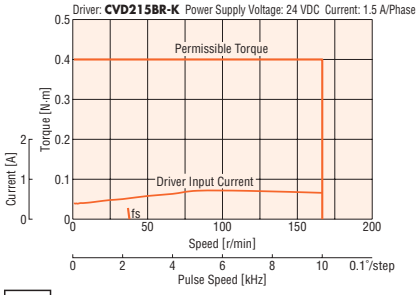

PKP223D15A-SG36/PKP223D15B-SG36

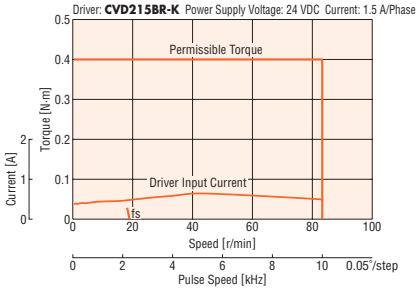

Note

● Data for the speed – torque characteristics is based on Oriental Motor's internal measurement conditions. If the conditions are changed, the characteristics may also change as a result.
● Depending on the driving conditions, a considerable amount of heat may be generated by the motor. Be sure to keep the motor case temperature at 100°C or less.

Dimensions (Unit: mm)

Motor

2D & 3D CAD

Product Name	Gear Ratio	Mass kg	2D CAD
PKP223D15A-SG□	**7.2, 9, 10, 18, 36**	0.16	B985
PKP223D15B-SG□			

● A number indicating the gear ratio is specified in the box □ in the product name.
● Applicable Connector
Connector housing: 51065-0600 (Molex)
Contact: 50212-8100 (Molex)
Crimp tool: 57176-5000 (Molex)

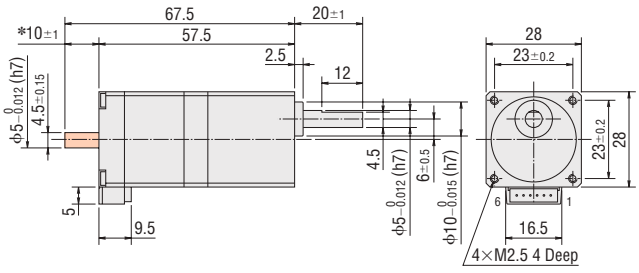

✻The length of the shaft flat on the double shaft model is 10±0.25.
● These dimensions are for double shaft motors.
For single shaft motors, ignore the shaded ▭ areas.

Connection Cable (Sold separately)

◇For Motor

Product Name	Length L (m)
LC2B06A	0.6

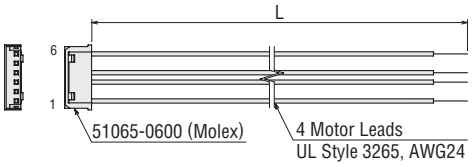

Inner Wiring Diagram of Motor

Wiring Diagram No.: ③

● Refer to page 07-85 for inner wiring diagram of motor.

SH Geared Type Frame Size 42 mm (Unipolar 5 lead wires)

Specifications

Product Name	Maximum Holding Torque N·m	Rotor Inertia J: kg·m^2	Rated Current A/Phase	Voltage VDC	Winding Resistance Ω/Phase	Inductance mH/Phase	Basic Step Angle	Gear Ratio	Permissible Torque N·m	Speed Range r/min	Backlash arcmin	Recommended Driver Product Name*
PKP243U09□2-SG3.6	0.2	36×10^{-7}	0.95	2	2.1	1.8	0.5°	3.6	0.2	0~833	90 (1.5°)	**CMD2109P**
PKP243U09□2-SG7.2	0.4						0.25°	7.2	0.4	0~416	60 (1°)	
PKP243U09□2-SG9	0.5						0.2°	9	0.5	0~333		
PKP243U09□2-SG10	0.56						0.18°	10	0.56	0~300		
PKP243U09□2-SG18	0.8						0.1°	18	0.8	0~166		
PKP243U09□2-SG36	0.8						0.05°	36	0.8	0~83		

● Either **A** (single shaft) or **B** (double shaft) indicating the configuration is specified where the box □ is located in the product name.
✻Refer to page 07-112 for details on the recommended driver.

Speed – Torque Characteristics (Reference values)

PKP243U09A2-SG3.6/PKP243U09B2-SG3.6

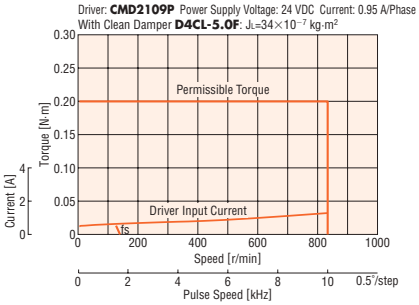

PKP243U09A2-SG7.2/PKP243U09B2-SG7.2

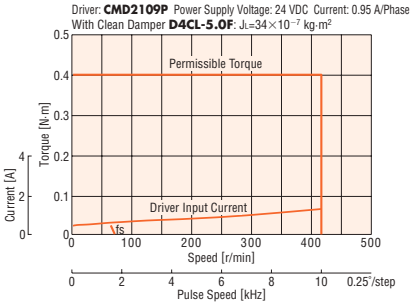

PKP243U09A2-SG9/PKP243U09B2-SG9

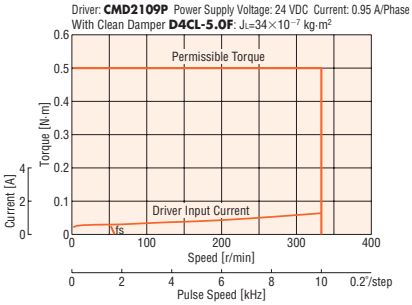

PKP243U09A2-SG10/PKP243U09B2-SG10

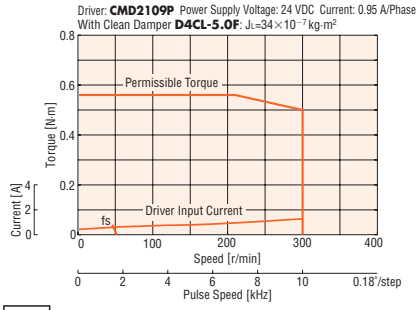

PKP243U09A2-SG18/PKP243U09B2-SG18

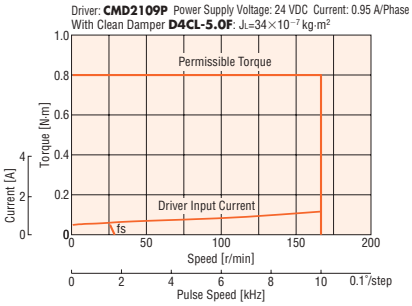

PKP243U09A2-SG36/PKP243U09B2-SG36

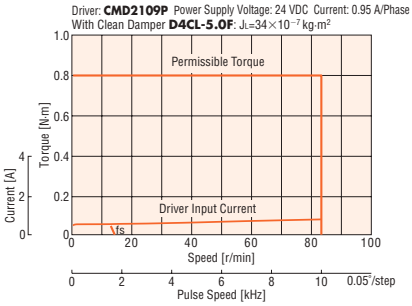

Note

● Data for the speed – torque characteristics is based on Oriental Motor's internal measurement conditions. If the conditions are changed, the characteristics may also change as a result.
● If there is a "clean damper" entry in the speed – torque characteristics, the data is for a double shaft motor when a clean damper is equipped.
● Depending on the driving conditions, a considerable amount of heat may be generated by the motor. Be sure to keep the motor case temperature at 100°C or less.

Dimensions (Unit: mm)

Motor

2D & 3D CAD

Product Name	Gear Ratio	Mass kg	2D CAD
PKP243U09A2-SG□	**3.6**, **7.2**, **9**, **10**, **18**, **36**	0.33	B1339
PKP243U09B2-SG□			

● A number indicating the gear ratio is specified in the box □ in the product name.

● Applicable Connector
Connector Housing: MDF97-5S-3.5C (HIROSE ELECTRIC CO., LTD.)
Contact: MDF97-22SC (HIROSE ELECTRIC CO., LTD.)
Crimp Tool: HT801/MDF97-22S (HIROSE ELECTRIC CO., LTD.)

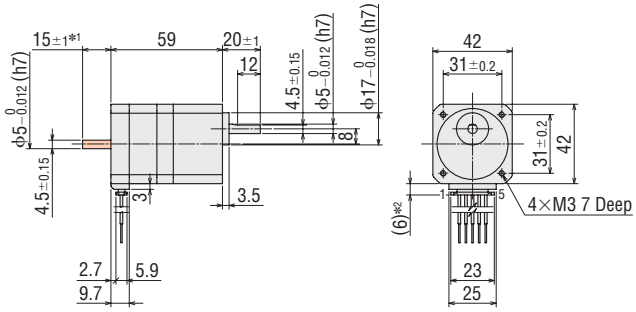

✻1 The length of the shaft flat on the double shaft model is 15±0.25.
✻2 With connection cable
● These dimensions are for double shaft motors.
For single shaft motors, ignore the shaded ▭ areas.

Connection Cable (Sold separately)

◇For Motor

Product Name	Length L (m)
LC2U06E	0.6

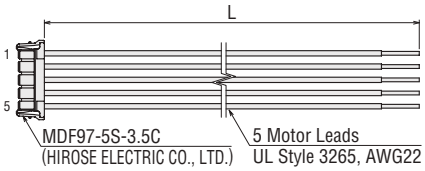

Inner Wiring Diagram of Motor

Wiring Diagram No.: ②

● Refer to page 07-85 for inner wiring diagram of motor.