## I/O Signal Circuits

Select sink logic or source logic according to the external control device you will be using.

### ◇Input Circuit

IN0~IN5

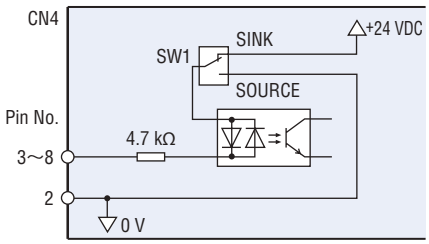


### ◇Connecting to the Host Controller

#### •Sink Logic

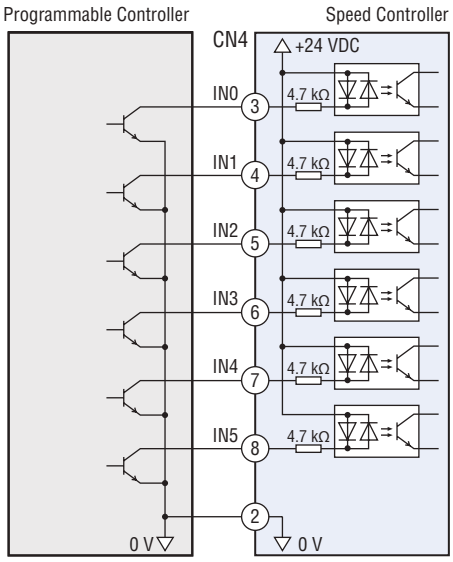


#### •Source Logic

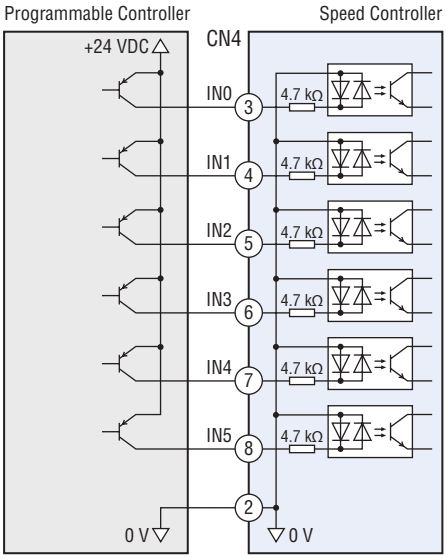


### ◇Output Circuit

OUT0, OUT1

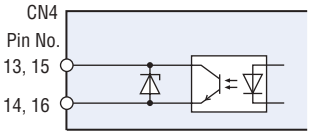


### ◇Connecting to the Host Controller

#### •Sink Logic

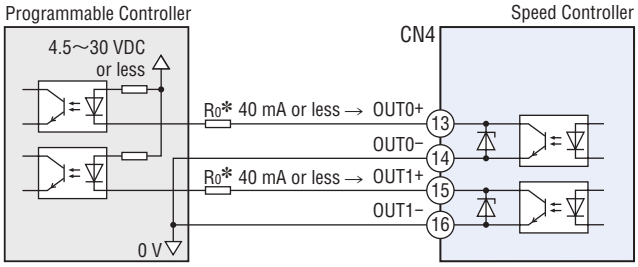


#### •Source Logic

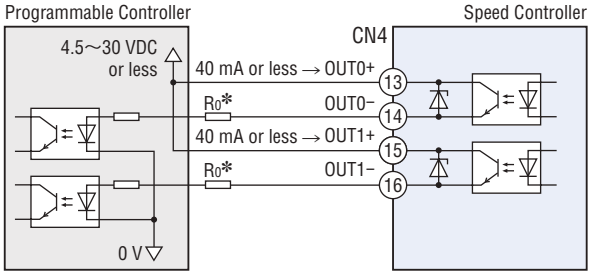


*Recommended resistance value

For 24 VDC: 680 Ω~4.7 kΩ (2 W) For 5 VDC: 150 Ω~1 kΩ (0.5 W)

**Note**

- The current applied to OUT0 and OUT1 must be 40 mA or less. If this value is exceeded, connect the limiting resistor R0.

### ◇When an External Control Device with a Built-In Clamp Diode is Used

With external control equipment with built-in clamping diodes connected, if the power of the external control equipment is turned off with the speed controller turned on, the motor may rotate due to current flowing around. Also, depending on the speed controller and the external control equipment used, the motor may rotate even if the power is simultaneously turned ON/OFF. To turn ON/OFF the power, follow the procedure below.

To turn OFF: Speed controller ➜ External control equipment

To turn ON: External control equipment ➜ Speed controller

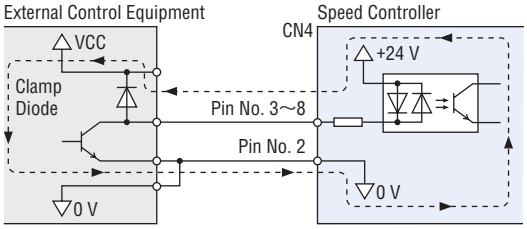


### ◇Speed Output

Pulse signals of 12 pulses are output at every rotation of the motor output shaft in synchronization with the motor rotation.

You can measure the SPEED-OUT frequency and calculate the motor speed.

$$\text{Motor Shaft Speed [r/min]} = \frac{\text{Speed Output Frequency [Hz]}}{12} \times 60$$

$$\text{Speed Output Frequency [Hz]} = \frac{1}{\text{T[s]}}$$

Speed Output Waveform

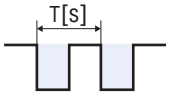

## Speed Setting Method

There are following 3 methods to set the speed.

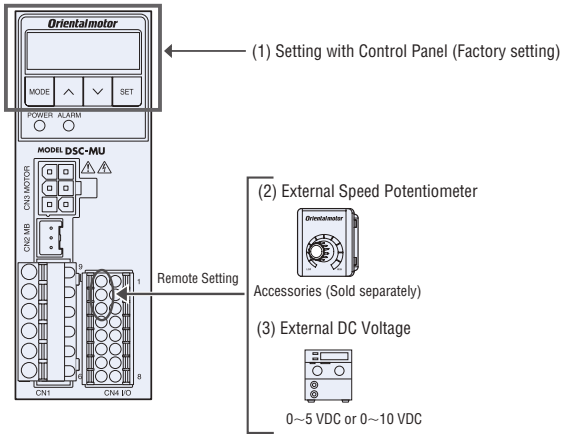


### ◇Setting with Control Panel

Up to 4 patterns of operating data can be set.

Select a pattern by switching the ON/OFF of the M0 and M1 inputs for operation.

| Operating Data No. | M1 | M0 | Description |
|---|---|---|---|
| 0 | OFF | OFF | Setting with control panel/remote setting* |
| 1 | OFF | ON | Setting with control panel |
| 2 | ON | OFF | |
| 3 | ON | ON | |

*When the "External Speed Instruction Input" parameter is "ON (enabled)" (Default: OFF), the speed can be set with an external speed potentiometer or external DC voltage.

### ◇Setting with External Speed Potentiometer

Connect an external speed potentiometer to CN4.

Setting of the "External Speed Instruction Voltage Selection" parameter: "0-5" (Default)

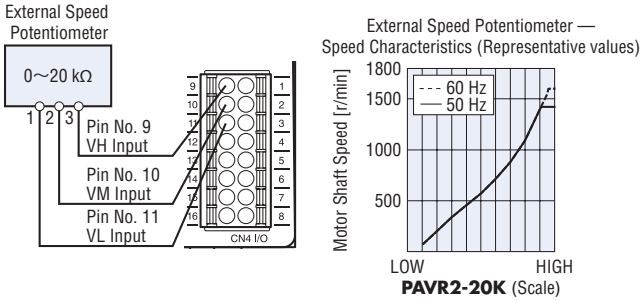


### ◇Setting with External DC Voltage

Connect an external DC power (0~5 VDC or 0~10 VDC) to CN4.

Setting of the "External Speed Instruction Voltage Selection" parameter:

For 0~5 VDC: "0-5" (Default)

For 0~10 VDC: "0-10"

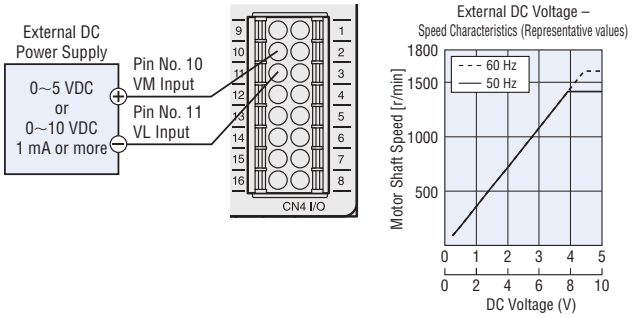


**Note**

The external DC voltage must be 10 VDC or less. Also, when connecting the external DC voltage, make sure not to connect to the wrong polarity. This may damage the speed controllers.

## Multi-Motor Control

Multiple motors can be operated at the same speed by using one external speed potentiometer or an external DC voltage.

### ◇When Using an External Speed Potentiometer

Parallel-motor operation using the external speed potentiometer (VRx) should be performed with 20 speed controllers or less.

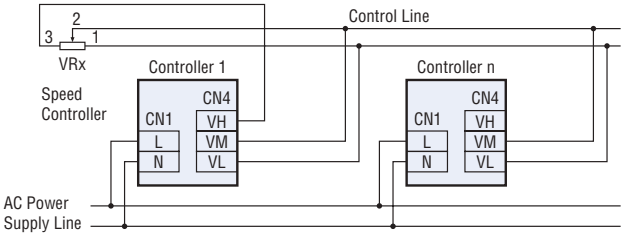


**•The calculation method of the resistance value (VRx) when the number of speed controllers connected is n**

Resistance value (VRx) = 20/n (kΩ), Allowable dissipation = n/4 (W)

Example: When connecting 2 speed controllers

Resistance value = 20/2 = 10 (kΩ), Allowable dissipation = 2/4 = 1/2 (W)

### ◇When using External DC Voltage

The number of connected controllers is limited according to the current capacity of the external DC voltage.

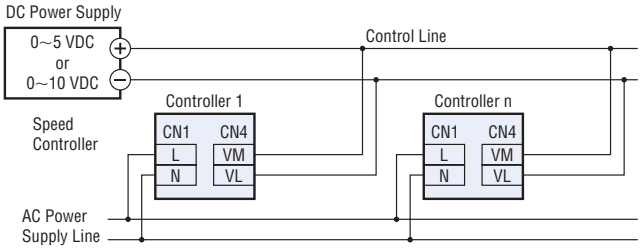


**•The calculation method of the current capacity of the external DC power supply (I) when the number of speed controllers connected is n**

Current Capacity (I) = 1×n (mA)

Example: When connecting 2 speed controllers

Current Capacity (I) = 1×2 = 2 (mA)

## Repeated Operation Cycle

When repeating the motor operation in a short cycle, refer to the following cycle to set the motor housing temperature to 90°C or less.

| | | |
|---|---|---|
| Instantaneous Stop | 6 W ~ 40 W | For repetition of operation and instantaneous stop<br>2 seconds or more, 50% or less of operation duty<br>(Example: Run for 1 second., stop for 1 second) |
| | 60 W, 90 W | For repetition of operation and instantaneous stop<br>4 seconds or more, 50% or less of operation duty<br>(Example: Run for 2 seconds, stop for 2 seconds) |
| Instantaneous bi-directional operation | 6 W ~ 40 W | For repetition of switching of rotation direction during operation<br>Switching every 2 seconds or more |
| | 60 W, 90 W | For repetition of switching of rotation direction during operation<br>Switching every 4 seconds or more |

When using a motor having electromagnetic brake with the "Deceleration Control" parameter ON, the conditions on the continuous operation are applied. See also "Continuous Operation Time with Deceleration Control ON" under Common Specifications for the electromagnetic brake type (➜ Page 03-24).

## Braking Current

For instantaneous stop, instantaneous bi-directional operation and operation by vertical driving*, a large half-wave rectified braking current flows in the AC power supply line for around 0.4 seconds. For this sort of operation, consider the braking current (peak value) in the following table when selecting the capacity of the breaker and AC power supply for the equipment.

| Motor Output Power | Braking Current (Peak value) | |
|---|---|---|
| | Single-Phase 110/115 VAC | Single-Phase 220/230 VAC |
| 6 W | 2 A | 1 A |
| 15 W | 4 A | 3 A |
| 25 W | 8 A | 4 A |
| 40 W | 12 A | 7 A |
| 60 W | 21 A | 10 A |
| 90 W | 29 A | 13 A |

*Only for electromagnetic brake types



Click Here
For more information, please visit ORIENTAL MOTOR Website:
https://www.orientalmotor.com.sg/om/tp/index.html

# Accessories (Sold Separately)

## Cable

### Cable System Configuration

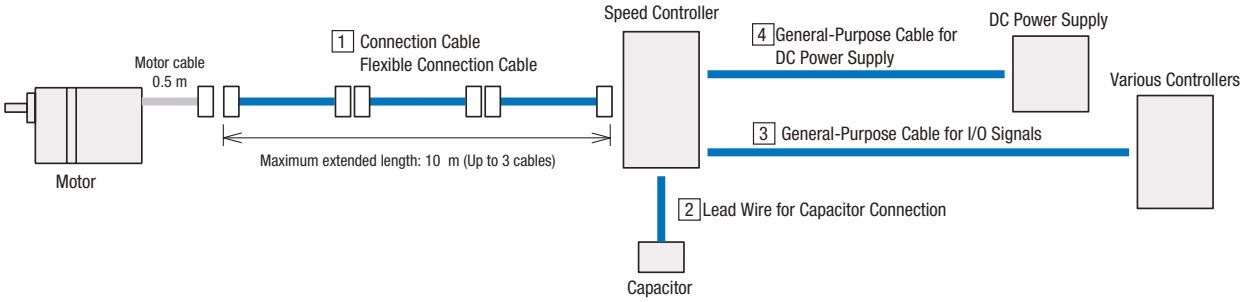




## 1 Connection Cables
## Flexible Connection Cables

This is a connection cable for connecting the motor and the speed controller. The maximum extension length of cables used between products is 10 m (up to 3 cables). Use the flexible connection cable in applications where the cable is bent and flexed.

### Product Line

◇Connection Cables For Standard Type (CC_SC)

| Product Name | Length L (m) | List Price |
|---|---|---|
| CC01SC | 1 | SGD35 |
| CC02SC | 2 | SGD40 |
| CC03SC | 3 | SGD50 |
| CC05SC | 5 | SGD70 |
| CC10SC | 10 | SGD120 |

◇Connection Cables For Electromagnetic Brake Type (CC_SCM)

| Product Name | Length L (m) | List Price |
|---|---|---|
| CC01SCM | 1 | SGD48 |
| CC02SCM | 2 | SGD53 |
| CC03SCM | 3 | SGD63 |
| CC05SCM | 5 | SGD83 |
| CC10SCM | 10 | SGD133 |

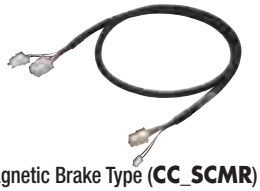

◇Flexible Connection Cables For Standard Type (CC_SCR)

| Product Name | Length L (m) | List Price |
|---|---|---|
| CC01SCR | 1 | SGD70 |
| CC02SCR | 2 | SGD80 |
| CC03SCR | 3 | SGD100 |
| CC05SCR | 5 | SGD140 |
| CC10SCR | 10 | SGD240 |

◇Flexible Connection Cables For Electromagnetic Brake Type (CC_SCMR)

| Product Name | Length L (m) | List Price |
|---|---|---|
| CC01SCMR | 1 | SGD95 |
| CC02SCMR | 2 | SGD105 |
| CC03SCMR | 3 | SGD125 |
| CC05SCMR | 5 | SGD165 |
| CC10SCMR | 10 | SGD265 |

### Dimensions (Unit: mm)

◇For Standard Type

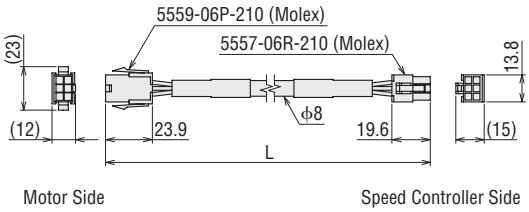


◇For Electromagnetic Brake Type

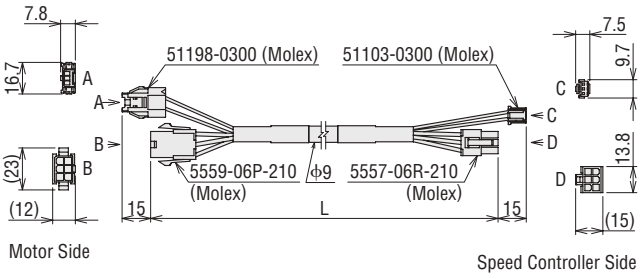


## 2 Lead Wires for Capacitor Connection

Includes lead wire with a terminal that can be connected to the capacitor terminal as it is.

### Product Line

| Product Name | Set Details | List Price |
|---|---|---|
| LCCN0510 | White: 5 leads<br>Red: 5 leads | SGD15 |

Application example

## 3 General-Purpose Cables for I/O Signals

These cables are useful for connecting the I/O signals of the speed controller. Up to 2 m is available.

| Product Name | Length (m) | List Price |
|---|---|---|
| **CC16D005B-1** | 0.5 | SGD22 |
| **CC16D010B-1** | 1 | SGD25 |
| **CC16D015B-1** | 1.5 | SGD28 |
| **CC16D020B-1** | 2 | SGD31 |

- The available general-purpose cable for I/O signals are those with 6 cores (**CC06D□B-1**), 10 cores (**CC10D□B-1**) and 12 cores (**CC12D□B-1**). Select the cable with most suitable number of cores according to the function you will use. For details on the products, contact with Oriental Motor sales office.

## 4 General-Purpose Cables for DC Power Supply

These cables connect the speed controller and DC power supply.

### Product Line

| Product Name | Length (m) | List Price |
|---|---|---|
| **CC02D005-3** | 0.5 | SGD11 |
| **CC02D010-3** | 1 | SGD12 |
| **CC02D015-3** | 1.5 | SGD13 |
| **CC02D020-3** | 2 | SGD14 |
| **CC02D050-3** | 5 | SGD23 |

## Flexible Couplings

These are clamp type couplings for connecting the motor and gearhead shaft with the driven shaft.
Once the gearhead is determined, the coupling can be selected.

● Couplings can also be used with round shaft types. Select a coupling with the same inner diameter size as the motor shaft diameter.

| Applicable Product | Load Type | Coupling Type | List Price |
|---|---|---|---|
| **SCM26** | Uniform load | **MCL30** | SGD61 |
| | Shock load | | |
| **SCM315** | Uniform load | **MCL30** | SGD61 |
| | Shock load | **MCL40** | SGD93 |
| **SCM425** | Uniform load | **MCL40** | SGD93 |
| | Shock load | **MCL55** | SGD124 |
| **SCM540**<br>**SCM560**<br>**SCM590** | Uniform load | **MCL55** | SGD124 |
| | Shock load | | |

## Motor and Gearhead Mounting Brackets

These dedicated mounting brackets are for mounting motors and gearheads.

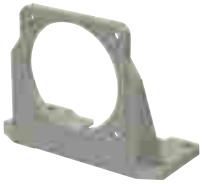

| Product Name | List Price | Applicable Product |
|---|---|---|
| **SOL2M4F** | SGD24 | **SCM26** Round Shaft Type<br>**SCM26** Parallel Shaft Combination Type |
| **SOL3M5F** | SGD26 | **SCM315** Round Shaft Type |
| **SOL3M6F** | SGD26 | **SCM315** Parallel Shaft Combination Type |
| **SOL4M5F** | SGD29 | **SCM425** Round Shaft Type |
| **SOL4M6F** | SGD29 | **SCM425** Parallel Shaft Combination Type |
| **SOL5M6F** | SGD31 | **SCM540**, **SCM560**, **SCM590**<br>Round Shaft Type |
| **SOL5M8F** | SGD31 | **SCM540**, **SCM560**, **SCM590**<br>Parallel Shaft Combination Type |

## Mounting Bracket for the Capacitor

Allows you to connect capacitors on DIN rails.
Material: SPCC
Surface treatment: Trivalent chromate

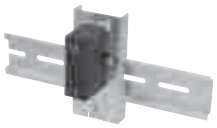

<Application example>

### Product Line

| Product Name | List Price |
|---|---|
| **PADP01C** | SGD6 |

## External Speed Potentiometer

### Features

- Potentiometer which allows the adjustment of rotation speed and torque.
- Easy installation
  Simply insert the potentiometer into the mounting hole. No tools are required. It can be removed.
- Easy wiring
  A terminal block is employed. Lead wire connection or soldering is not required. The efficiency of wiring is improved.

(Front)

(Back)

### Product Line

| Product Name | List Price |
|---|---|
| **PAVR2-20K** | SGD25 |

The following items are included in each product.
External speed potentiometer, operating manual

Note
● The external speed potentiometer (**PAVR2-20K**) cannot be used together with a general-purpose cable for I/O signals.

### Specifications

Resistance: 0~20 kΩ
Rate power: 0.05 W
Resistance change characteristics: B curve

**•Applicable Lead Wire Size**
AWG22~18 (0.3~0.75 mm$^2$)

BRUSHLESS MOTORS

**BMU** Series

# EASY SPEED CONTROL

## WITH SPIN AND PUSH

Lineup Added

Hypoid Right-Angle Hollow Shaft Gear and Various Gears

Gearheads Supporting Food Machinery Grease H1

# Introduction of the NEW Lineup

## 4 Types of Selectable Gearheads

The connector types of the **BMU** Series suit more variations of gears.
You can choose to meet your usage or method of installation.
For types and features of each gearhead, see pages 04-08 and 04-09.

Hypoid Right-Angle Hollow Shaft
**JH** Gear
60 W, 120 W, 200 W, 400 W

Space saving
Cost saving
Stainless steel shaft

Legged Gearhead **JB** Gear
200 W, 400 W

Legged all-in-one gear
High gear ratio 1/1200

Parallel Shaft Gearhead **GFV** Gear
30 W, 60 W, 120 W, 200 W, 400 W

Long life
Rated life 10,000 hours
Stainless steel shaft

Parallel Shaft Gearhead **JV** Gear
200 W, 400 W

High gear ratio 1/450
Stainless steel shaft

### Compact, Lightweight, High Power, Energy/Space-Saving

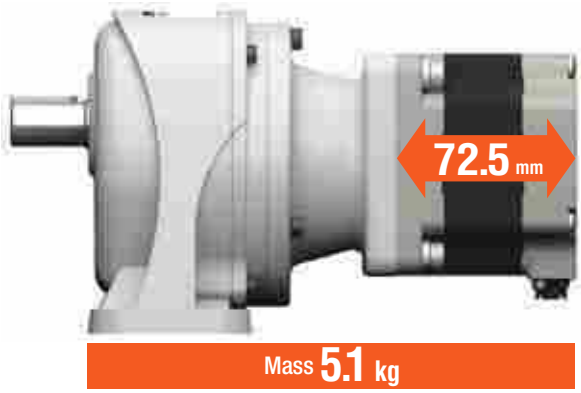


Mass **5.1** kg

Comparison with general 400 W motors

Motor length only **1/3**

**Motor and Driver Efficiency**
**87%**

Compact, Lightweight

High Power

Energy/Space-Saving

✻ For the legged gearhead **JB** gear with 1/5 gear 400 W ratio.

## Supports Food Machinery Grease H1 (Connector type only)

Food machinery grease H1 is used for gear lubrication.

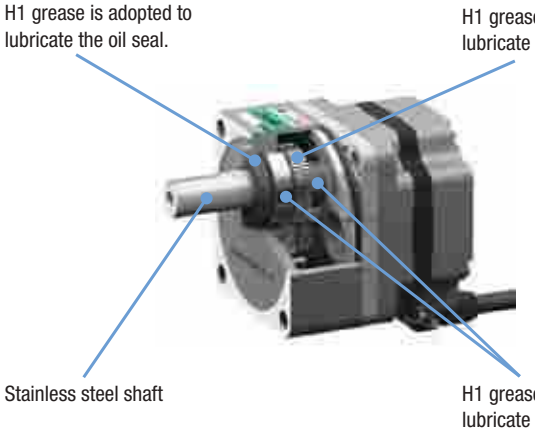


● **What is food machinery Grease H1?**
It is a grease categorized by the NSF as "a lubricant with incidental food contact for use in and around food processing areas" categorized by the NSF.

What is the NSF (NSF International)?
It is an international third-party certifier headquartered in the U.S. which provides global services regarding public health and the environment, including standard development, product certification, audits, education, and risk management.

● **The rated life of the gearhead is 5,000 hours**

# Features of Brushless Motor

Because our brushless motor do not have brushes, which is the DC motor demerit, they produce less noise and are maintenance-free.
The use of permanent magnets allows for compact, high output, and highly efficient motors.

## Wide Speed Control Range

The brushless motor has a broader speed control range compared to AC speed control motors and inverters. They are ideal for applications that require a constant torque for all speeds, low to high.

| Product Group | Speed Control Range* | Speed Ratio |
|---|---|---|
| Brushless Motor (**BMU** Series) | 80～4000 r/min | 1:50 |
| Inverter Control Three-Phase Induction Motor | 200～2400 r/min | 1:12 |
| AC Speed Control Motor | 50Hz: 90～1400 r/min<br>60Hz: 90～1600 r/min | 1:15<br>1:17 |

*The speed control range varies depending on the model.

## Stable Speed Control

The brushless motors always monitor feedback signals from the motor and compare them with the set speed to adjust the applied voltage. For this reason, even if the load changes, stable rotation is performed from low speed to high speed.

● Speed Regulation Comparison (Reference values)

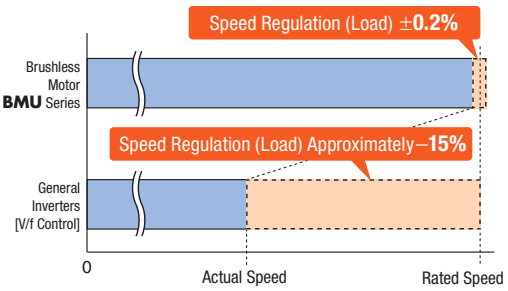


The table on the right shows the speed regulation (load) for each model. It shows how much the rotational speed varies by changing the load between 0 to rated torques.

| Model | Speed Regulation with Varying Loads | |
|---|---|---|
| | | Condition |
| **BMU** Series | ±0.2% | 0 ～ rated torque at rated speed |
| **BLE2** Series | ±0.2% | |
| **BLE** Series | ±0.5% | |
| **BXII** Series | ±0.05% | |
| **BLH** Series | ±0.5% | |

## Thin, Lightweight and High Power

The brushless motors use permanent magnets so that they are thin and lightweight but yet have high power. These contribute to the downsizing of equipment.

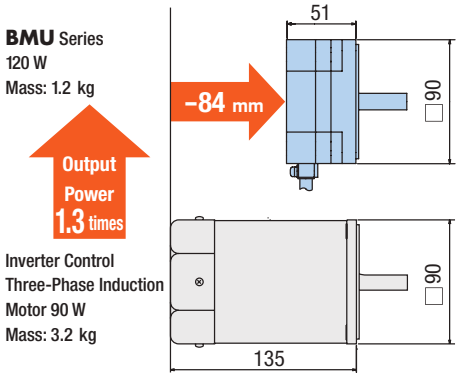


## Contributes to Energy Savings

The brushless motors use permanent magnets in the rotor, reducing secondary loss and power consumption.This contributes to energy savings with the equipment.

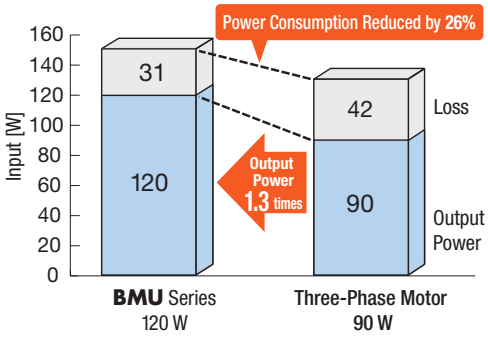

# Main Features of **BMU** Series

## Spin and Push. Easy Speed Control.

Turn the dial, and set the speed to your desired speed.

Turning the dial slowly changes the speed by 1 r/min.

Pushing the dial sets the speed.

The dial operation can be locked.

Scan me

## Easy Wiring. Quick Start.

The motor and driver can be easily connected.

The power and I/O connectors are of the screwless type.

With only one switch, the motor can be started immediately.

The rotation direction of the motor can be changed with easy operation.

Scan me

## Maximum Speed of 4000 r/min Speed Ratio 1:50* (2.5 times of the conventional ratio)

**BMU** Series has a maximum speed of 4000 r/min*.
Speed ratio of 1:50 (80～4000 r/min*) is realized. Speed regulation has been greatly improved from ±0.5% to ±0.2%. With the highest standards of speed control, we respond to our customers' demands.
*Depends on the gearhead.

· **BMU** Series 120 W

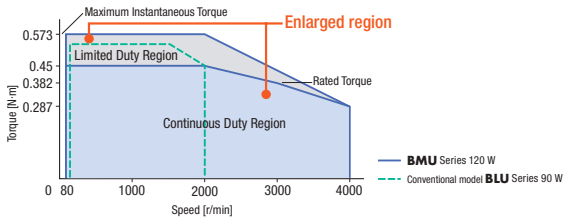

# If you open the Front Panel on the Driver, you can set up Various Functions.

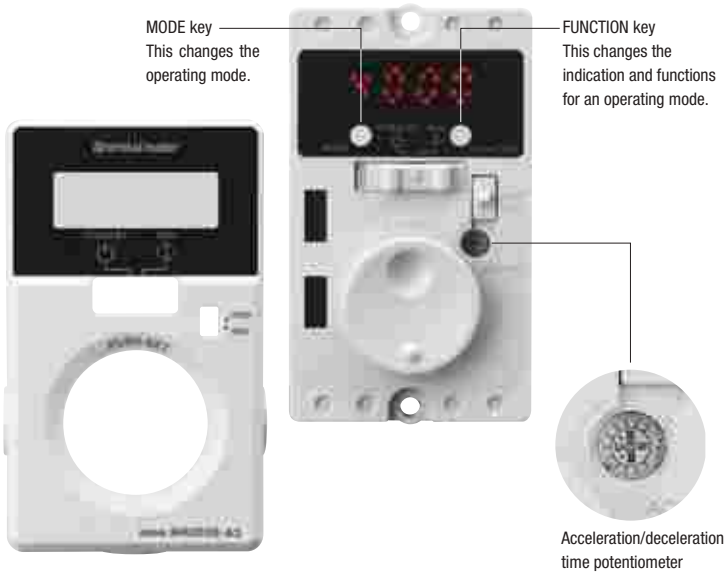


(Typical functions that can be set while the front panel is opened)

- Motor Startup/Stop ✻
- Adjustment of operating speed ✻
- Setting the operating speed ✻
- Selecting the rotation direction ✻
- Changing the indication
- Operating speed indication when the speed reduction/speed increasing ratio is set
- Setting the acceleration/deceleration time
- Dial operation lock
- Speed setting for the 4-speed operation
- Speed limits setting
- Validating the external operating signals
- External input/output signal allocation
- Setting the overload alarm detection time, except during axial lock
- Easy holding function for output shaft

✻Setting is possible even if the front panel is attached.

## Speed indication

Displays the motor rotational speed by 1 r/min. Additionally, with the "gear ratio" parameter of a conveyor, the display shows the conveyor transfer speed in m/s directly.

## Load factor indication

With the rated torque of the motor at 100%, the load factor can be expressed in percentage (40～200%). The load condition during the start-up, as well as the load condition due to the aging deterioration of the equipment can be confirmed.

Indication at a load factor of 50%

## Protective function

Various protective functions such as overload protective function and overvoltage protective function are equipped. When a protection is triggered, it shows the alarm code on the display and outputs an alarm signal.

## 4-speed setting

Operation in 4 speeds is possible by setting the data to operating data No.0, No.1, No.2, or No.3, and switching the input of the M0 and M1 terminals.

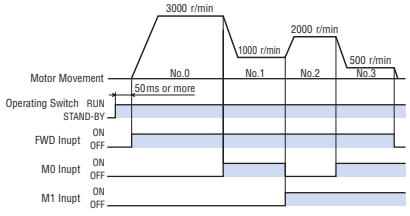


- In 4 speed drive, switching of the rotation direction from external input signals cannot be performed. (For 30, 60, 120 W)

## Sets the acceleration/deceleration time

The acceleration time and deceleration time can be digitally set, in addition to adjusting them with an acceleration/deceleration time potentiometer.

- Setting range:
  0.0～15.0 sec (Initial value: 0.5 sec)

For the digital setting, the acceleration time and deceleration time are each set independently. This allows you to finely adjust the speeds to mitigate shocks on conveyed products at startups and stops and freely set them according to the desired tact time.

## Output shaft is held when stopped

When the motor is stopped, the load can be electrically held.

(Holding force is up to 50% of the rated torque.)

Note

If the electrical power supply to the driver is turned OFF, the holding force dissipates. This cannot be used to prevent a fall during a power outage.

## Other functions

### Lock the dial operation

This prevents the undesired changes in the speed and the changes or deletion of data with the operation of the dial.

### You can set to “Front Panel Operation Invalid”

When operating using external signals, the front panel switch operation can be set to “Invalid”.

# Features of Connector Type

The connector is new and specially developed for compact motors. It connects the motor and the driver directly.
In addition to the motor mechanism, improved dust-resistant and watertight performance has allowed the motor to obtain a Degree of Protection IP66*.

## New connector

The built-in gasket and the O-ring contribute to improved watertight performance. The locking lever makes connection easy, eliminating the trouble to fix screws.

● Connector Structure

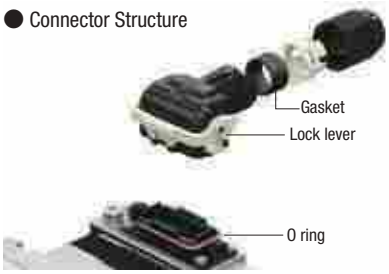


● How to Install

Plug the connector. Turn the locking lever. Connection is completed.

## Stainless steel shaft equipped as a standard*

Highly rustproof, anti-corrosive stainless steel is used for the shaft. Stainless steel is also used for the parallel key and the installation screws.

*The protection rating and the output shaft material depend on the gearhead used. For details, refer to the Lineup chart. ➜ Page 04-10

# Cable with Selectable Drawing Direction for Direct Connection

2 types of connection cables are available to choose from depending on the direction to draw out. For direct connections between the motor and the driver, one connection cable can extend up to 10 m, eliminating the need for a relay.

## Selectable cable drawing direction

2 types are available to choose from depending on the direction to draw out the motor cable.
(The round shaft type draws only from the counter-output shaft side.)

Drawing on the output shaft side

Drawing on the counter-output shaft side

## Connects the motor and the driver directly

One cable can extend up to 10 m without a relay, eliminating the need for relays. Only this one cable is required for the power, signals and grounding, reducing wiring efforts.

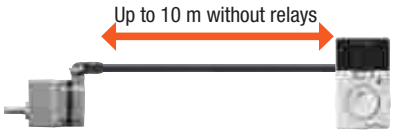


# Designed for Compactness, High Power and High Efficiency

An optimal magnetic design and high-performance material enable a stator plate thickness of just 11.2 mm. This slimness realizes a highly efficient power unit that outputs 120 W. Compared with the conventional brushless motor of the same output power, the stator plate thickness is only half of the conventional one (For motors with a frame size of 90 mm).
Moreover, the use of high-performance material reduces the amount of material used, therefore reducing costs.

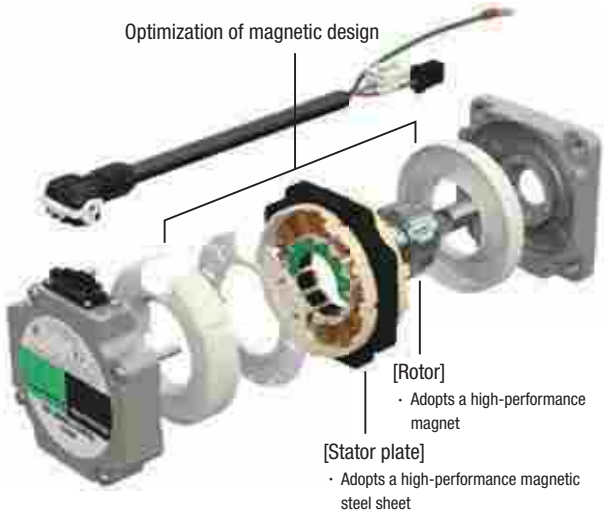

# Substantial Improvement in the Efficiency of the Motor and Driver Package

The **BMU** Series sees a maximum of 15% unit efficiency improvement compared with conventional models*.

*__BMU__ Series 30 W and __BLU__ Series 20 W comparison.

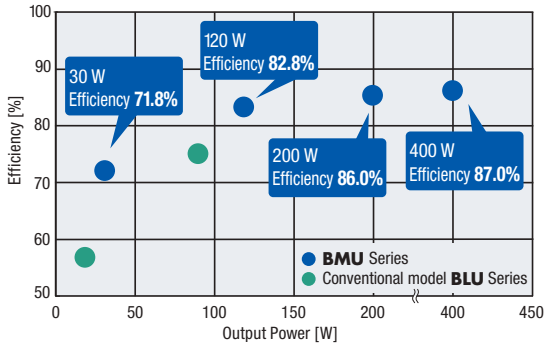


# Assembled Motor and Gearhead

The motor and gearhead come pre-assembled. This reduces assembly time and allows immediate installation of the unit to equipment.

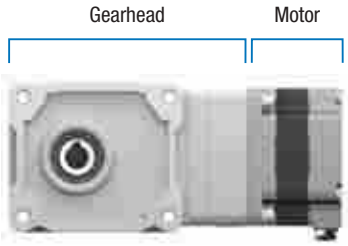

You can remove the gearhead and change the mounting angle by 90-degree intervals. You can change the connector position depending on the equipment.

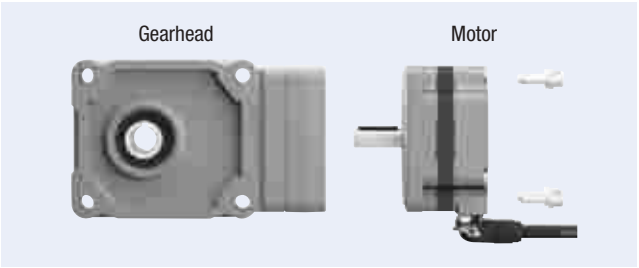


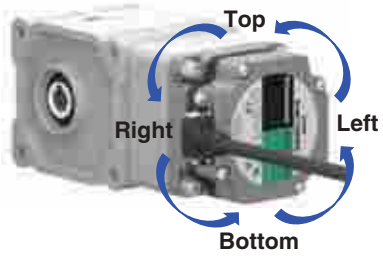

# Types and Features of Gearheads

These high-strength gearheads support high-speed rotation and high outputs the brushless motors provide.
You can choose from various gearheads to meet your application, requirements, or installation.

## Type

### Parallel Shaft Gearhead

Parallel Shaft Gearhead **GFV** Gear

Parallel Shaft Gearhead **JV** Gear

### Legged Gearhead

Legged Gearhead **JB** Gear

## Installation Advantages

### Installs on the Flange (**JV** Gear)

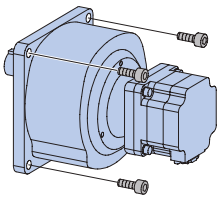

### Improving the Installation Accuracy (**GFV** Gear)

The boss of the output shaft and the installation surface are cut. This improves the accuracy of device installation.

### Tapped Hole on the Output Shaft End (**GFV** Gear • □80 mm or more)

The output shaft for the gearhead has a tapped hole at the end.
The hole can be used for supporting the prevention of coming out of a transmission component.

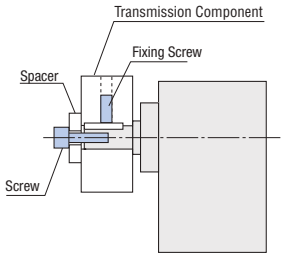


Usage example of the screw hole on the output shaft end

### No Mounting Bracket Required

The shape quickly attach to your device.

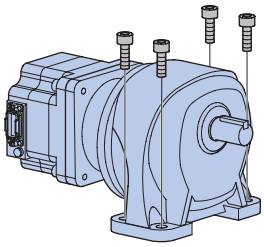

### High Rigidity/Integral Structure

Allows you to easily design the shaft center with the integral installation surface structure.

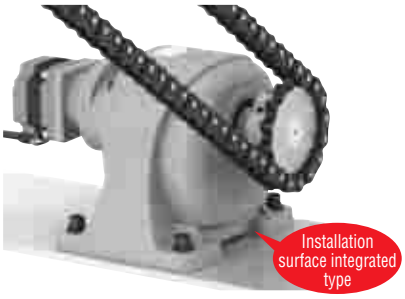


## Features

### High Strength Gearhead (**GFV** Gear)

A heat treatment strengthens the gears and the bearing diameter is enlarged for a higher strength.
The gearhead has 2 to 3 times of the permissible torque than AC motor gearheads with the same frame size, contributing to downsized equipment.

### High Gear Ratio (**JV** Gear)

This line has products with gear ratios up to 1/450.

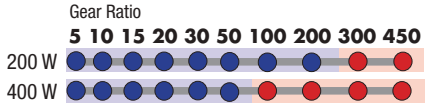


● represents parallel shaft gearhead **GFV** gear

### Long Life (**GFV** Gear)

The gearhead has a long life using special bearings and grease for high-speed rotation. It achieves a rated life of 10,000 hours.

### High Permissible Torque

The torque is not saturated and the benefit of the motor torque can be maximized.

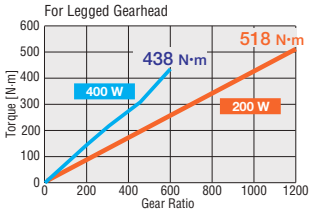


[At 3000 r/min]

### High Strength

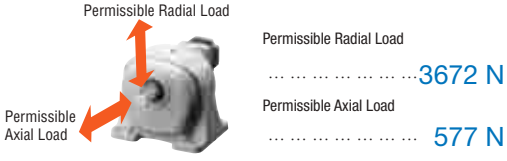


[With 1/1200 gear ratio, at 3000 r/mim]

### High Gear Ratio

This line has products with gear ratios up to 1/1200.

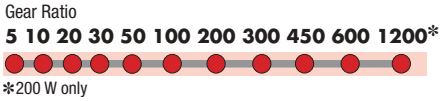


*200 W only

# Right-Angle Shaft Gearhead

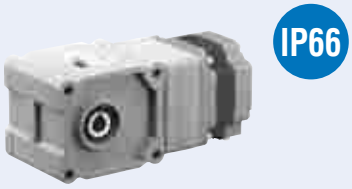


Hypoid Right-Angle Hollow Shaft **JH** Gear

## Space Saving

Placing the motor at right angles saves space.

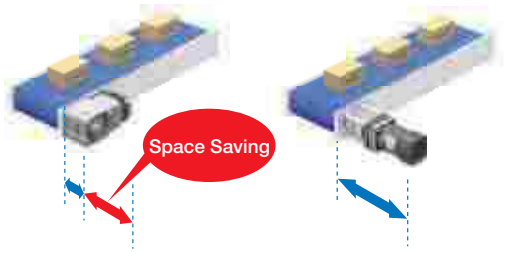


## Cost Saving

Reduced couplings, belts, pulleys, and other parts contribute to reduced parts costs and assembling steps.

## Unsaturated Permissible Torque

The permissible torque is not saturated even at a high gear ratio.
Therefore, the benefit of the motor torque can be maximized.

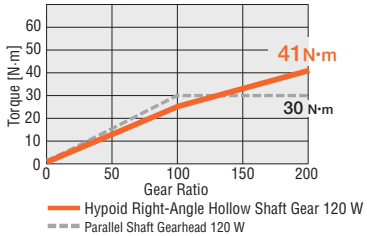


[At 3000 r/min]

## High Strength

Comparison with parallel shaft gearhead

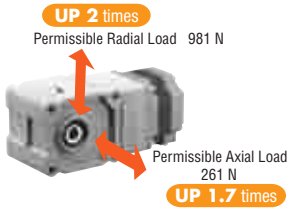


[1/200 at 3000 r/min]

# Lineup

## Motor

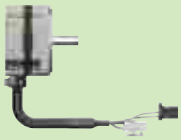

| Type/material of the output shaft | | | Output Power [W] | Gear Ratio | Degree of Protection |
|---|---|---|---|---|---|
| Parallel Shaft Gearhead | Cable Type / Connector Type<br>**GFV** Gear<br>Cable<br>Iron Shaft<br>Connector<br>Stainless Steel Shaft | | 30 | **5**, **10**, **15**, **20**, **30**, **50**, **100**, **200** | Cable IP40<br>Connector IP66 |
| | | | 60 | | |
| | | | 120 | | |
| | | | 200 | | |
| | | | 400 | **5**, **10**, **15**, **20**, **30**, **50** | |
| | Connector Type<br>NEW<br>**GFV** Gear<br>Supports Food Machinery Grease H1<br>Stainless Steel Shaft | | 30 | **5**, **10**, **15**, **20**, **30**, **50**, **100**, **200** | IP66 |
| | | | 60 | | |
| | | | 120 | | |
| | Connector Type<br>**JV** Gear<br>Stainless Steel Shaft | | 200 | **300**, **450** | IP66 |
| | | | 400 | **100**, **200**, **300**, **450** | |
| Connector Type<br>Legged Gearhead<br>**JB** Gear<br>Iron Shaft | | | 200 | **5**, **10**, **20**, **30**, **50**, **100**, **200**, **300**, **450**, **600**, **1200** | IP44 |
| | | | 400 | **5**, **10**, **20**, **30**, **50**, **100**, **200**, **300**, **450**, **600** | |
| Connector Type<br>Hypoid Right-Angle Hollow Shaft<br>**JH** Gear<br>Stainless Steel Shaft | | | NEW 60 | **10**, **15**, **20**, **30**, **50**, **100**, **200** | IP66 |
| | | | 120 | | |
| | | | 200 | **5**, **10**, **15**, **20**, **30**, **50**, **100**, **200** | |
| | | | 400 | | |
| Cable Type / Connector Type<br>Round Shaft Type*1<br>Cable<br>Iron Shaft<br>Connector<br>Stainless Steel Shaft | | | 30 | – | Cable IP40<br>Connector IP66 |
| | | | 60 | | |
| | | | 120 | | |
| | | | 200 | | |
| | | | 400 | | |

## Driver

30/60/120 W

200/400 W

| Output Power [W] | Power Supply Voltage [VAC] |
|---|---|
| 30 | Single-Phase 100-120<br>Single-Phase 200-240<br>Three-Phase 200-240 |
| 60 | |
| 120 | |
| 200 | |
| 400 | Three-Phase 200-240 |
| 30 | Single-Phase 100-120<br>Single-Phase 200-240<br>Three-Phase 200-240 |
| 60 | |
| 120 | |
| 200 | Single-Phase 100-120<br>Single-Phase 200-240<br>Three-Phase 200-240 |
| 400 | Three-Phase 200-240 |
| 200 | Single-Phase 100-120<br>Single-Phase 200-240<br>Three-Phase 200-240 |
| 400 | Three-Phase 200-240 |
| 60 | Single-Phase 100-120<br>Single-Phase 200-240<br>Three-Phase 200-240 |
| 120 | |
| 200 | |
| 400 | Three-Phase 200-240 |
| 30 | Single-Phase 100-120<br>Single-Phase 200-240<br>Three-Phase 200-240 |
| 60 | |
| 120 | |
| 200 | |
| 400 | Three-Phase 200-240 |

## Connection Cable

Cable Type

Cable Type

1~10 m

Connector Type

0.5~10 m

Drawing on the output shaft side

Drawing on the counter-output shaft side*2

*1 Some round shaft types have a milling cut shaft.

*2 The round shaft type can connect only the connection cable drawning from the counter-output shaft.

# Product Number Code

## Motor

◇Parallel Shaft Gearhead **GFV** Gear/Round Shaft Type

**BLM 4 60 S H P - 50 S F**

① ② ③ ④ ⑤ ⑥ ⑦ ⑧ ⑨

| | | |
|---|---|---|
| ① | Motor Type | **BLM**: Brushless Motor |
| ② | Frame Size | **2**: 60 mm **4**: 80 mm **5**: 90 mm<br>**6**: 104 mm (Gearhead is 110 mm) |
| ③ | Output Power | **30**: 30 W **60**: 60 W **120**: 120 W<br>**200**: 200 W **400**: 400 W |
| ④ | Identification Part Number | **S** |
| ⑤ | Motor Connection Method | Blank: Cable Type<br>**H**: Connector Type |
| ⑥ | Motor Degree of Protection | Blank: IP40 Specifications<br>**P**: IP66 Specifications |
| ⑦ | Gear Ratio/Shaft Shape | Numbers: Gear Ratio of the Gearhead<br>**A**, **A2**: Round Shaft Type<br>**AC**, **AC2**: Round Shaft Type (With milling cut) |
| ⑧ | Material of the Output Shaft | **B**, Blank: Iron **S**: Stainless Steel |
| ⑨ | **F**: Supports Food Machinery Grease H1 | |

◇Hypoid Right-Angle Hollow Shaft **JH** Gear, Legged Gearhead **JB** Gear, Parallel Shaft Gearhead **JV** Gear

**BLM 5 200 H P K - 5 C B 50 B - L**

① ② ③ ④ ⑤ ⑥ ⑦ ⑧ ⑨ ⑩ ⑪ ⑫ ⑬

Motor Product Name | Gearhead Product Name

| | | | |
|---|---|---|---|
| Motor Product Name | ① | Motor Type | **BLM**: Brushless Motor |
| | ② | Frame Size | **4**: 80 mm **5**: 90 mm |
| | ③ | Output Power | **60**: 60 W **120**: 120 W<br>**200**: 200 W **400**: 400 W |
| | ④ | Identification Part Number | **S** |
| | ⑤ | Motor Connection Method | **H**: Connector Type |
| | ⑥ | Motor Degree of Protection | **P**: IP66 |
| | ⑦ | Combination Type Motor | **K**: Round Shaft Type (With key) |
| Gearhead Product Name | ⑧ | Combination Type Motor Frame Size | **4**: 80 mm **5**: 90 mm |
| | ⑨ | Gearhead Size | Code (Example) **C**<br>or the codes of the gearhead size,see ■Specifications (➔ Pages 04-18, 04-19 and 04-22). |
| | ⑩ | Gearhead Type | **H**: **JH** Gear<br>**B**: **JB** Gear<br>**V**: **JV** Gear |
| | ⑪ | Gear Ratio | Numbers: Gear Ratio of the Gearhead |
| | ⑫ | Material of the Output Shaft | **S**: Stainless Steel **B**: Iron |
| | ⑬ | Connector Position | Blank: Bottom **-L**: Left |

## Driver

**BMUD 60 - C 2**

① ② ③ ④

| | | |
|---|---|---|
| ① | Driver Type | **BMUD**: **BMU** Series Driver |
| ② | Output Power | **30**: 30 W **60**: 60 W **120**: 120 W<br>**200**: 200 W **400**: 400 W |
| ③ | Power Supply Voltage | **A**: Single-Phase 100-120 VAC<br>**C**: Single-Phase, Three-Phase 200-240 VAC<br>**S**: Three-Phase 200-240 VAC |
| ④ | Reference Number | |

## Connection Cable/Flexible Connection Cable (For cable type)

**CC 01 BL 2 R**

① ② ③ ④ ⑤

| | | |
|---|---|---|
| ① | Cable Type | **CC**: Connection Cable |
| ② | Length | **01**: 1 m **02**: 2 m **03**: 3 m<br>**05**: 5 m **07**: 7 m **10**: 10 m |
| ③ | Applied Model | **BL**: Brushless Motor |
| ④ | Reference Number | |
| ⑤ | Blank: Connection Cable | **R**: Flexible Connection Cable |

## Connection Cable (For connector type)

**CC 010 H BL F**

① ② ③ ④ ⑤

| | | |
|---|---|---|
| ① | Cable Type | **CC**: Connection Cable |
| ② | Length | **005**: 0.5 m **010**: 1 m **015**: 1.5 m<br>**020**: 2 m **025**: 2.5 m **030**: 3 m<br>**040**: 4 m **050**: 5 m **070**: 7 m<br>**100**: 10 m |
| ③ | Motor Connection Method | **H**: Connector Type |
| ④ | Applied Model | **BL**: Brushless Motor |
| ⑤ | Cable Drawing Direction | **F**: Drawing on the Output Shaft Side<br>**B**: Drawing on the Counter-output Shaft Side |



Click Here
For more information, please visit ORIENTAL MOTOR Website:
https://www.orientalmotor.com.sg/om/tp/index.html

## System Configuration Cable Type

The motor, driver and connection cable needs to be purchased separately.

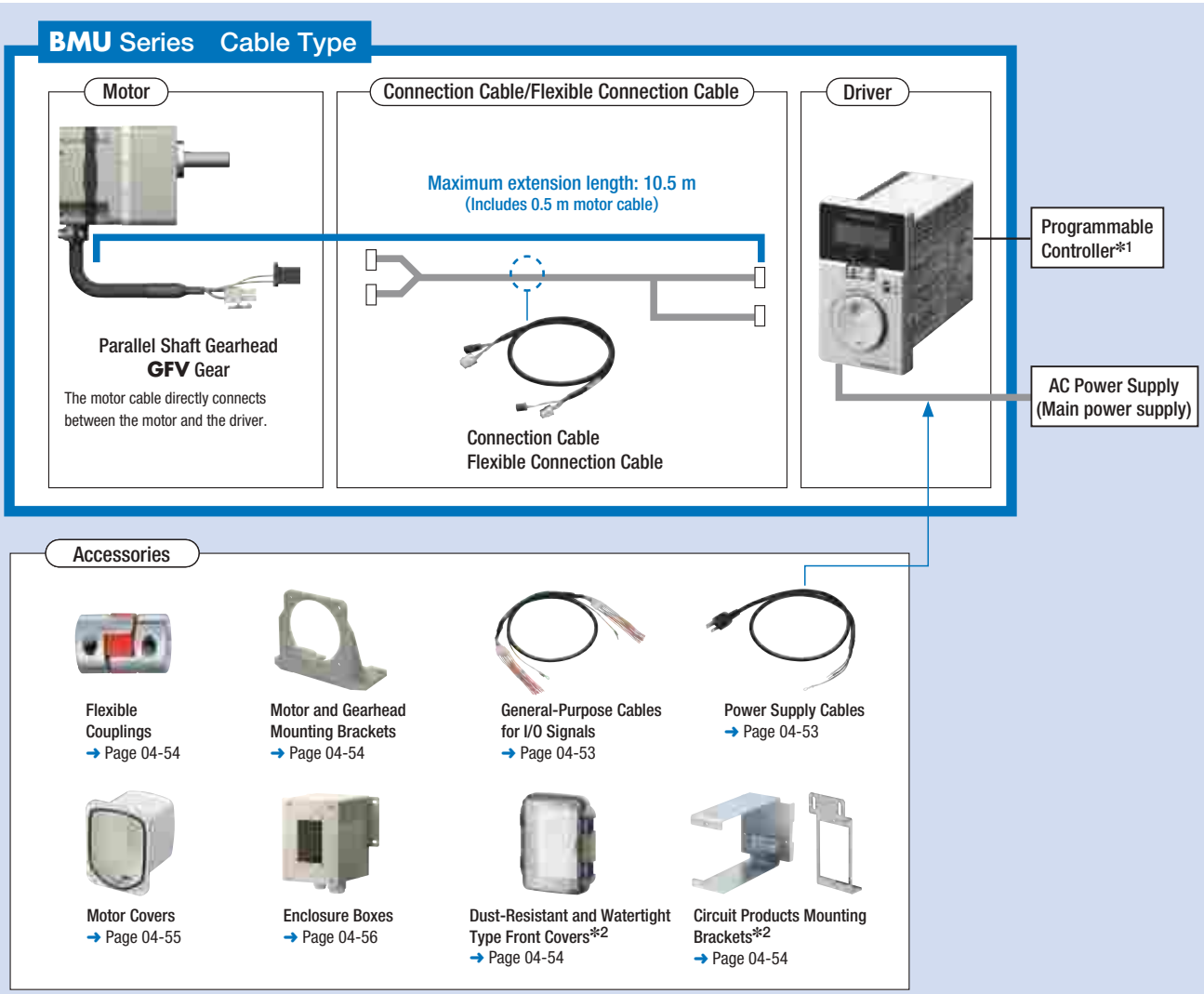


*1 Not supplied.

*2 Circuit products mounting brackets cannot be used together with the dust-resistant and watertight type front cover.

●System Configuration Example

| BMU Series Cable Type | | | + | Sold Separately | | |
|---|---|---|---|---|---|---|
| Motor Parallel Shaft Gearhead GFV Gear | Driver | Connection Cable (1 m) | | Mounting Bracket | Flexible Coupling | Circuit Product Mounting Bracket |
| **BLM230-10B** | **BMUD30-A2** | **CC01BL2** | | **SOL2M4F** | **MCL301010** | **MAFP05V** |
| SGD215 | SGD175 | SGD38 | | SGD24 | SGD61 | SGD12 |

●The system configuration shown above is an example. Other combinations are available.

# Product Line Cable Type

A motor, driver and connection cable needs to be purchased separately.

## Motors

### ◇Parallel Shaft Gearhead **GFV** Gear

| Output Power | Product Name | Gear Ratio | List Price |
|---|---|---|---|
| 30 W | **BLM230-□B** | **5, 10, 15, 20** | SGD215 |
| | | **30, 50, 100** | SGD224 |
| | | **200** | SGD236 |
| 60 W | **BLM460S-□B** | **5, 10, 15, 20** | SGD245 |
| | | **30, 50, 100** | SGD254 |
| | | **200** | SGD266 |
| 120 W | **BLM5120-□B** | **5, 10, 15, 20** | SGD320 |
| | | **30, 50, 100** | SGD331 |
| | | **200** | SGD343 |
| 200 W | **BLM6200S-□B** | **5, 10, 15, 20** | SGD398 |
| | | **30, 50** | SGD413 |
| | | **100, 200** | SGD431 |
| 400 W | **BLM6400S-□B** | **5, 10, 15, 20** | SGD448 |
| | | **30, 50** | SGD463 |

### ◇Round Shaft Type

| Output Power | Product Name | List Price |
|---|---|---|
| 30 W | **BLM230-A2** | SGD128 |
| 60 W | **BLM260-A2** | SGD143 |
| 120 W | **BLM5120-A2** | SGD175 |
| 200 W | **BLM5200-A** | SGD213 |
| 400 W | **BLM5400-A** | SGD263 |

### Lineup of Other Products

Round Shaft Type
Milling Cut Output Shaft

For details, contact your nearest Oriental Motor sales office.

## Drivers

| Output Power | Power Supply Voltage | Product Name | List Price |
|---|---|---|---|
| 30 W | Single-Phase 100-120 VAC | **BMUD30-A2** | SGD175 |
| | Single-Phase, Three-Phase 200-240 VAC | **BMUD30-C2** | SGD175 |
| 60 W | Single-Phase 100-120 VAC | **BMUD60-A2** | SGD181 |
| | Single-Phase, Three-Phase 200-240 VAC | **BMUD60-C2** | SGD181 |
| 120 W | Single-Phase 100-120 VAC | **BMUD120-A2** | SGD203 |
| | Single-Phase, Three-Phase 200-240 VAC | **BMUD120-C2** | SGD203 |
| 200 W | Single-Phase 100-120 VAC | **BMUD200-A** | SGD225 |
| | Single-Phase, Three-Phase 200-240 VAC | **BMUD200-C** | SGD225 |
| 400 W | Three-Phase 200-240 VAC | **BMUD400-S** | SGD238 |

## Connection Cables (For cable type)

| Length | Product Name | List Price |
|---|---|---|
| 1 m | **CC01BL2** | SGD38 |
| 2 m | **CC02BL2** | SGD53 |
| 3 m | **CC03BL2** | SGD68 |
| 5 m | **CC05BL2** | SGD98 |
| 7 m | **CC07BL2** | SGD128 |
| 10 m | **CC10BL2** | SGD173 |

## Flexible Connection Cables (For cable type)

| Length | Product Name | List Price |
|---|---|---|
| 1 m | **CC01BL2R** | SGD75 |
| 2 m | **CC02BL2R** | SGD105 |
| 3 m | **CC03BL2R** | SGD135 |
| 5 m | **CC05BL2R** | SGD195 |
| 7 m | **CC07BL2R** | SGD255 |
| 10 m | **CC10BL2R** | SGD345 |

# Accessories (Common among cable and connector types)

## Motor

| Type | Parallel Key | Safety Cover | Installation Screws | Operating Manual |
|---|---|---|---|---|
| **GFV** Gear | 1 piece | – | 1 set | 1 copy |
| **JV** Gear | – | – | – | |
| **JB** Gear | – | – | – | |
| **JH** Gear | 1 piece | 1 piece | 1 set | |
| Round Shaft | – | – | – | |

## Driver

| Connector | Startup Guide | Operating Manual |
|---|---|---|
| ・CN1 connector (1 piece)<br>・CN4 connector (1 piece) | 1 copy | 1 copy |

A number in the box □ in the product name indicates the gear ratio.

## System Configuration Connector Type

The motor, driver and connection cable needs to be purchased separately.

### BMU Series Connector Type

**Motor**

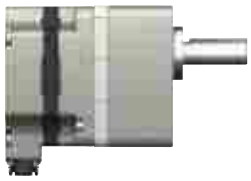

Parallel Shaft Gearhead
**GFV** Gear

**Connection Cables**

Maximum extension length: 10 m

Drawing on the output shaft side

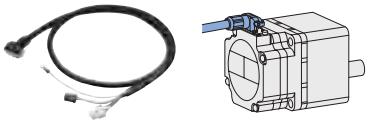

Drawing on the counter-output shaft side

**Driver**

Programmable Controller*1

AC Power Supply (Main power supply)

**Accessories**

Flexible Couplings
➜ Page 04-54

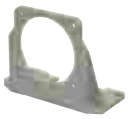

Motor and Gearhead Mounting Brackets
➜ Page 04-54

General-Purpose Cables for I/O Signals
➜ Page 04-53

Power Supply Cables
➜ Page 04-53

Torque Arms
➜ Page 04-55

Motor Covers
➜ Page 04-55

Enclosure Boxes
➜ Page 04-56

Dust-Resistant and Watertight Type Front Covers*2
➜ Page 04-54

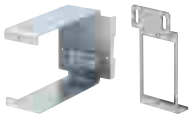

Circuit Products Mounting Brackets*2
➜ Page 04-54

*1 Not supplied.
*2 Circuit products mounting brackets cannot be used together with the dust-resistant and watertight type front cover.

### System Configuration Example

| BMU Series Connector Type | | | + | Sold Separately | | |
|---|---|---|---|---|---|---|
| Motor Parallel Shaft Gearhead **GFV** Gear | Driver | Connection Cable (3 m) | | Mounting Bracket | Flexible Coupling | Circuit Product Mounting Bracket |
| **BLM230HP-10S** | **BMUD30-A2** | **CC030HBLF** | | **SOL2M4F** | **MCL301010** | **MAFP05V** |
| SGD265 | SGD175 | SGD66 | | SGD24 | SGD61 | SGD12 |

The system configuration shown above is an example. Other combinations are available.

# Product Line Connector Type

A motor, driver and connection cable needs to be purchased separately.

## Motors

### ◇Parallel Shaft Gearhead **GFV** Gear

| Output Power | Product Name | Gear Ratio | List Price |
|---|---|---|---|
| 30 W | **BLM230HP-□S** | **5, 10, 15, 20** | SGD265 |
| | | **30, 50, 100** | SGD274 |
| | | **200** | SGD286 |
| 60 W | **BLM460SHP-□S** | **5, 10, 15, 20** | SGD295 |
| | | **30, 50, 100** | SGD304 |
| | | **200** | SGD316 |
| 120 W | **BLM5120HP-□S** | **5, 10, 15, 20** | SGD370 |
| | | **30, 50, 100** | SGD381 |
| | | **200** | SGD393 |
| 200 W | **BLM6200SHP-□S** | **5, 10, 15, 20** | SGD448 |
| | | **30, 50** | SGD463 |
| | | **100, 200** | SGD481 |
| 400 W | **BLM6400SHP-□S** | **5, 10, 15, 20** | SGD498 |
| | | **30, 50** | SGD513 |

### ◇Parallel Shaft Gearhead **GFV** Gear Supports Food Machinery Grease H1

| Output Power | Product Name | Gear Ratio | List Price |
|---|---|---|---|
| 30 W | NEW **BLM230HP-□SF** | **5, 10, 15, 20** | SGD328 |
| | | **30, 50, 100** | SGD336 |
| | | **200** | SGD349 |
| 60 W | NEW **BLM460SHP-□SF** | **5, 10, 15, 20** | SGD358 |
| | | **30, 50, 100** | SGD366 |
| | | **200** | SGD379 |
| 120 W | NEW **BLM5120HP-□SF** | **5, 10, 15, 20** | SGD433 |
| | | **30, 50, 100** | SGD444 |
| | | **200** | SGD455 |

### ◇Parallel Shaft Gearhead **JV** Gear

| Output Power | Product Name | Gear Ratio | List Price |
|---|---|---|---|
| 200 W | **BLM5200HPK-5KV□S** | **300, 450** | SGD956 |
| 400 W | **BLM5400HPK-5DV□S** | **100, 200** | SGD744 |
| | **BLM5400HPK-5KV□S** | **300, 450** | SGD1,006 |

## Lineup of Other Products

| |
|---|
| Round Shaft Type |
| Milling Cut Output Shaft |
| Connector Position 4-direction selection |

For details, contact your nearest Oriental Motor sales office.

### ◇Legged Gearhead **JB** Gear

| Output Power | Product Name | Gear Ratio | List Price |
|---|---|---|---|
| 200 W | **BLM5200HPK-5AB□B-L** | **5, 10, 20** | SGD538 |
| | **BLM5200HPK-5CB□B-L** | **30, 50** | SGD588 |
| | **BLM5200HPK-5EB□B-L** | **100, 200** | SGD788 |
| | **BLM5200HPK-5KB□B-L** | **300, 450** | SGD988 |
| | **BLM5200HPK-5SB□B-L** | **600, 1200** | SGD1,068 |
| 400 W | **BLM5400HPK-5AB□B-L** | **5, 10, 20** | SGD588 |
| | **BLM5400HPK-5CB□B-L** | **30, 50** | SGD638 |
| | **BLM5400HPK-5EB□B-L** | **100, 200** | SGD838 |
| | **BLM5400HPK-5KB□B-L** | **300, 450** | SGD1,038 |
| | **BLM5400HPK-5SB□B-L** | **600** | SGD1,118 |

### ◇Hypoid Right-Angle Hollow Shaft **JH** Gear

| Output Power | Product Name | Gear Ratio | List Price |
|---|---|---|---|
| 60 W | NEW **BLM460SHPK-4H□S** | **10, 15, 20** | SGD498 |
| | | **30, 50, 100** | SGD509 |
| | | **200** | SGD520 |
| 120 W | **BLM5120HPK-5H□S** | **10, 15, 20** | SGD516 |
| | | **30, 50, 100** | SGD528 |
| | | **200** | SGD539 |
| 200 W | **BLM5200HPK-5XH□S** | **5, 10, 15, 20** | SGD763 |
| | | **30** | SGD775 |
| | | **50** | SGD813 |
| | **BLM5200HPK-5YH□S** | **100** | SGD1,000 |
| | | **200** | SGD1,188 |
| 400 W | **BLM5400HPK-5XH□S** | **5, 10, 15, 20** | SGD813 |
| | | **30** | SGD825 |
| | | **50** | SGD863 |
| | **BLM5400HPK-5YH□S** | **100** | SGD1,050 |
| | | **200** | SGD1,238 |

### ◇Round Shaft Type

| Output Power | Product Name | List Price |
|---|---|---|
| 30 W | **BLM230HP-AS** | SGD153 |
| 60 W | **BLM260HP-AS** | SGD168 |
| 120 W | **BLM5120HP-AS** | SGD200 |
| 200 W | **BLM5200HP-AS** | SGD238 |
| 400 W | **BLM5400HP-AS** | SGD288 |

## Drivers

| Output Power | Power Supply Voltage | Product Name | List Price |
|---|---|---|---|
| 30 W | Single-Phase 100-120 VAC | **BMUD30-A2** | SGD175 |
| | Single-Phase, Three-Phase 200-240 VAC | **BMUD30-C2** | SGD175 |
| 60 W | Single-Phase 100-120 VAC | **BMUD60-A2** | SGD181 |
| | Single-Phase, Three-Phase 200-240 VAC | **BMUD60-C2** | SGD181 |
| 120 W | Single-Phase 100-120 VAC | **BMUD120-A2** | SGD203 |
| | Single-Phase, Three-Phase 200-240 VAC | **BMUD120-C2** | SGD203 |
| 200 W | Single-Phase 100-120 VAC | **BMUD200-A** | SGD225 |
| | Single-Phase, Three-Phase 200-240 VAC | **BMUD200-C** | SGD225 |
| 400 W | Three-Phase 200-240 VAC | **BMUD400-S** | SGD238 |

A number in the box □ in the product name indicates the gear ratio.

Accessories ➜ Page 04-13

## Connection Cables (For connector type)

| Length | Product Name | List Price |
|---|---|---|
| 0.5 m | **CC005HBL■** | SGD38 |
| 1 m | **CC010HBL■** | SGD38 |
| 1.5 m | **CC015HBL■** | SGD43 |
| 2 m | **CC020HBL■** | SGD48 |
| 2.5 m | **CC025HBL■** | SGD56 |
| 3 m | **CC030HBL■** | SGD66 |
| 4 m | **CC040HBL■** | SGD78 |
| 5 m | **CC050HBL■** | SGD89 |
| 7 m | **CC070HBL■** | SGD110 |
| 10 m | **CC100HBL■** | SGD139 |

The ■ symbol in the product is replaced with **F** or **B** that represents the cable drawing direction.

Two types of connection cables for different cable drawing directions are provided.

Note

The cable for the round shaft type draws only from the counter-output shaft side.

**F**: Drawing on the output shaft side **B**: Drawing on the counter-output shaft side

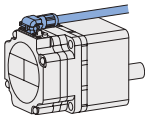

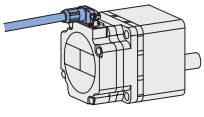

Click Here
For more information, please visit ORIENTAL MOTOR Website:
https://www.orientalmotor.com.sg/om/tp/index.html

# Parallel Shaft Gearhead GFV Gear 30 W, 60 W, 120 W

## Specifications

| Product Name | | Cable Type | BLM230-□B | | BLM460S-□B | | BLM5120-□B | |
|---|---|---|---|---|---|---|---|---|
| | Motor | Connector Type | BLM230HP-□S / BLM230HP-□SF | | BLM460SHP-□S / BLM460SHP-□SF | | BLM5120HP-□S / BLM5120HP-□SF | |
| | Driver | | BMUD30-A2 | BMUD30-C2 | BMUD60-A2 | BMUD60-C2 | BMUD120-A2 | BMUD120-C2 |
| Rated Output Power (Continuous) | | W | 30 | | 60 | | 120 | |
| Power Supply Input | Rated Voltage | VAC | Single-Phase 100-120 | Single-Phase 200-240/ Three-Phase 200-240 | Single-Phase 100-120 | Single-Phase 200-240/ Three-Phase 200-240 | Single-Phase 100-120 | Single-Phase 200-240/ Three-Phase 200-240 |
| | Permissible Voltage Range | | −15～+10% | | −15～+10% | | −15～+10% | |
| | Frequency | Hz | 50 / 60 | | 50 / 60 | | 50 / 60 | |
| | Permissible Frequency Range | | ±5% | | ±5% | | ±5% | |
| | Rated Input Current | A | 1.2 | Single-Phase: 0.7/ Three-Phase: 0.38 | 1.7 | Single-Phase: 1.0/ Three-Phase: 0.52 | 3.3 | Single-Phase: 2.0/ Three-Phase: 1.1 |
| | Maximum Input Current | A | 2.0 | Single-Phase: 1.2/ Three-Phase: 0.75 | 3.3 | Single-Phase: 1.9/ Three-Phase: 1.1 | 6.8 | Single-Phase: 4.1/ Three-Phase: 2.0 |
| Rated Speed | | r/min | 3000 | | | | | |
| Speed Control Range | | | 80～4000 r/min (Speed ratio 1:50) | | | | | |
| Speed Regulation | Load | | ±0.2% or less: Conditions 0 to rated torque, rated speed, rated voltage, normal temperature | | | | | |
| | Voltage | | ±0.2% or less: Conditions Rated voltage −15～+10%, rated speed, no load, normal temperature | | | | | |
| | Temperature | | ±0.2% or less: Conditions Operating ambient temperature 0～+40˚C, rated speed, no load, rated voltage | | | | | |

●The values correspond to each specification and characteristic of a stand-alone motor.

| Gear Ratio | | | | 5 | 10 | 15 | 20 | 30 | 50 | 100 | 200 |
|---|---|---|---|---|---|---|---|---|---|---|---|
| Rotation Direction | | | | Same direction as the motor | | | | Opposite direction to the motor | | | Same direction as the motor |
| Output Shaft Rotation Speed [r/min]*1 | | | 80 r/min | 16 | 8 | 5.3 | 4 | 2.7 | 1.6 | 0.8 | 0.4 |
| | | | 4000 r/min | 800 | 400 | 267 | 200 | 133 | 80 | 40 | 20 |
| Permissible Torque [N·m] | | 30 W | At 80～2000 r/min | 0.45 | 0.9 | 1.4 | 1.8 | 2.6 | 4.3 | 6 | 6 |
| | | | At 3000 r/min | 0.43 | 0.86 | 1.3 | 1.7 | 2.5 | 4.1 | 6 | 6 |
| | | | At 4000 r/min | 0.32 | 0.65 | 0.97 | 1.3 | 1.9 | 3.1 | 5.4 | 5.4 |
| | | 60 W | At 80～2000 r/min | 0.9 | 1.8 | 2.7 | 3.6 | 5.2 | 8.6 | 16 | 16 |
| | | | At 3000 r/min | 0.86 | 1.7 | 2.6 | 3.4 | 4.9 | 8.2 | 16 | 16 |
| | | | At 4000 r/min | 0.65 | 1.3 | 1.9 | 2.6 | 3.7 | 6.2 | 12.4 | 14 |
| | | 120 W | At 80～2000 r/min | 2.0 | 4.1 | 6.1 | 8.1 | 11.6 | 19.4 | 30 | 30 |
| | | | At 3000 r/min | 1.7 | 3.4 | 5.2 | 6.9 | 9.9 | 16.4 | 30 | 30 |
| | | | At 4000 r/min | 1.3 | 2.6 | 3.9 | 5.2 | 7.4 | 12.3 | 24.7 | 27 |
| Permissible Radial Load [N] | 10 mm from output shaft end*2 | 30 W | At 80～3000 r/min | 100 | 150 | | | 200 | | | |
| | | | At 4000 r/min | 90 | 130 | | | 180 | | | |
| | | 60 W | At 80～3000 r/min | 200 | 300 | | | 450 | | | |
| | | | At 4000 r/min | 180 | 270 | | | 420 | | | |
| | | 120 W | At 80～3000 r/min | 300 | 400 | | | 500 | | | |
| | | | At 4000 r/min | 230 | 370 | | | 450 | | | |
| | 20 mm from output shaft end*2 | 30 W | At 80～3000 r/min | 150 | 200 | | | 300 | | | |
| | | | At 4000 r/min | 110 | 170 | | | 230 | | | |
| | | 60 W | At 80～3000 r/min | 250 | 350 | | | 550 | | | |
| | | | At 4000 r/min | 220 | 330 | | | 500 | | | |
| | | 120 W | At 80～3000 r/min | 400 | 500 | | | 650 | | | |
| | | | At 4000 r/min | 300 | 430 | | | 550 | | | |
| Permissible Axial Load [N] | | 30 W | | 40 | | | | | | | |
| | | 60 W | | 100 | | | | | | | |
| | | 120 W | | 150 | | | | | | | |
| Permissible Load Inertia J [×10$^{-4}$kg·m$^2$] | | 30 W | | 12 | 50 | 110 | 200 | 370 | 920 | 2500 | 5000 |
| | | 60 W | | 22 | 95 | 220 | 350 | 800 | 2200 | 6200 | 12000 |
| | | 120 W | | 45 | 190 | 420 | 700 | 1600 | 4500 | 12000 | 25000 |
| | At instantaneous stop, instantaneous bi-directional operation*3 | 30 W | | 1.55 | 6.2 | 14 | 24.8 | 55.8 | 155 | | |
| | | 60 W | | 5.5 | 22 | 49.5 | 88 | 198 | 550 | | |
| | | 120 W | | 25 | 100 | 225 | 400 | 900 | 2500 | | |

*1 The rotational speed of the output shaft is the value of the rotational speed divided by the gear ratio.
*2 About Load Position ➜ Page 04-17
*3 It is also applicable when digitally setting the deceleration time to below 0.1 second.

## Speed – Torque Characteristics

Continuous Duty Region : Continuous operation is possible in this region.
Limited Duty Region : This region is used primarily when accelerating.

### ●30 W

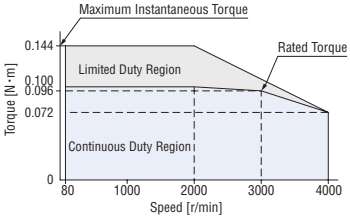


### ●60 W

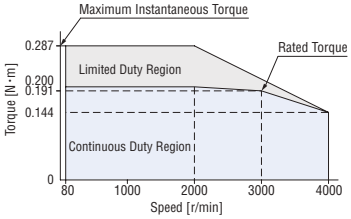


### ●120 W

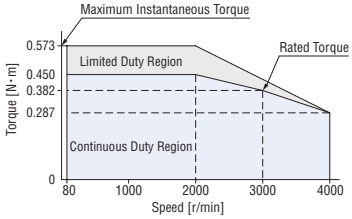


●The values correspond to each specification and characteristic of a stand-alone motor. The speed-torque characteristics shows the values when rated voltage is applied.
●A number in the box □ in the product name indicates the gear ratio.

# Parallel Shaft Gearhead GFV Gear 200 W, 400 W

## Specifications

| Product Name | | | BLM6200S-□B | BLM6200SHP-□S | BLM6400S-□B | BLM6400SHP-□S |
|---|---|---|---|---|---|---|
| | Motor | Cable Type | BLM6200S-□B | | BLM6400S-□B | |
| | | Connector Type | BLM6200SHP-□S | | BLM6400SHP-□S | |
| | Driver | | BMUD200-A | BMUD200-C | BMUD400-S | |
| Rated Output Power (Continuous) | | W | 200 | | 400 | |
| Power Supply Input | Rated Voltage | VAC | Single-Phase 100-120 | Single-Phase 200-240/ Three-Phase 200-240 | Three-Phase 200-240 | |
| | Permissible Voltage Range | | −15～+10% | | −15～+10% | |
| | Frequency | Hz | 50 / 60 | | 50 / 60 | |
| | Permissible Frequency Range | | ±5% | | ±5% | |
| | Rated Input Current | A | 4.6 | Single-Phase: 2.7/Three-Phase: 1.5 | 2.8 | |
| | Maximum Input Current | A | 9.3 | Single-Phase: 4.9/Three-Phase: 3.4 | 5.1 | |
| Rated Speed | | r/min | 3000 | | | |
| Speed Control Range | | | 80～4000 r/min (Speed ratio 1:50) | | | |
| Speed Regulation | Load | | ±0.2% or less: Conditions 0 to rated torque, rated speed, rated voltage, normal temperature | | | |
| | Voltage | | ±0.2% or less: Conditions Rated voltage −15～+10%, rated speed, no load, normal temperature | | | |
| | Temperature | | ±0.2% or less: Conditions Operating ambient temperature 0～+40°C, rated speed, no load, rated voltage | | | |

●The values correspond to each specification and characteristic of a stand-alone motor.

| Gear Ratio | | | | 5 | 10 | 15 | 20 | 30 | 50 | 100*1 | 200*1 |
|---|---|---|---|---|---|---|---|---|---|---|---|
| Rotation Direction | | | | Same direction as the motor | | | | Opposite direction to the motor | | Same direction as the motor | |
| Output Shaft Rotation Speed [r/min]*2 | | | 80 r/min | 16 | 8 | 5.3 | 4 | 2.7 | 1.6 | 0.8 | 0.4 |
| | | | 4000 r/min | 800 | 400 | 267 | 200 | 133 | 80 | 40 | 20 |
| Permissible Torque [N·m] | | 200 W | At 80～3000 r/min | 2.9 | 5.7 | 8.6 | 11.5 | 16.4 | 27.4 | 51.6 | 70 |
| | | | At 4000 r/min | 2.2 | 4.3 | 6.5 | 8.6 | 12.4 | 20.6 | 38.9 | 63 |
| | | 400 W | At 80～3000 r/min | 5.7 | 11.4 | 17.1 | 22.9 | 32.8 | 54.6 | – | – |
| | | | At 4000 r/min | 4.3 | 8.6 | 12.9 | 17.2 | 24.6 | 41.1 | – | – |
| Permissible Radial Load [N] | 10 mm from output shaft end | | At 80～3000 r/min | 550 | | | | 1000 | | 1400 | |
| | | | At 4000 r/min | 500 | | | | 900 | | 1200 | |
| | 20 mm from output shaft end | | At 80～3000 r/min | 800 | | | | 1250 | | 1700 | |
| | | | At 4000 r/min | 700 | | | | 1100 | | 1400 | |
| Permissible Axial Load [N] | | | | 200 | | | | 300 | | 400 | |
| Permissible Load Inertia J [×10$^{-4}$kg·m$^2$] | | | | 100 | 460 | 1000 | 1700 | 3900 | 9300 | 18000 | 37000 |
| | At instantaneous stop, instantaneous bi-directional operation*3 | | | 50 | 200 | 450 | 800 | 1800 | 5000 | | |

*1 For 200 W output only.

*2 The rotational speed of the output shaft is the value of the rotational speed divided by the gear ratio.

*3 It is also applicable when digitally setting the deceleration time to below 0.1 second.

◇About Load Position

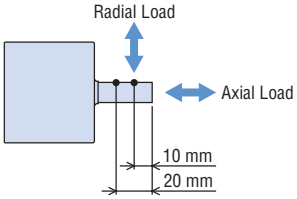


## Speed – Torque Characteristics

Continuous Duty Region : Continuous operation is possible in this region.
Limited Duty Region : This region is used primarily when accelerating.

### ●200 W

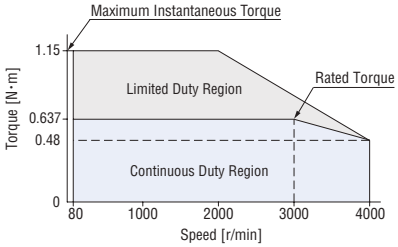


### ●400 W

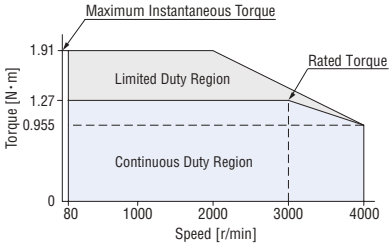


●The values correspond to each specification and characteristic of a stand-alone motor. The speed-torque characteristics shows the values when rated voltage is applied.

●A number in the box □ in the product name indicates the gear ratio.



Click Here
For more information, please visit ORIENTAL MOTOR Website:
https://www.orientalmotor.com.sg/om/tp/index.html

# Parallel Shaft Gearhead JV Gear 200 W, 400 W

## Specifications

| Product Name | Motor (Connector Type) | | BLM5200HPK-5KV□S | | BLM5400HPK-5■V□S |
|---|---|---|---|---|---|
| | Driver | | BMUD200-A | BMUD200-C | BMUD400-S |
| Rated Output Power (Continuous) | | W | 200 | | 400 |
| Power Supply Input | Rated Voltage | VAC | Single-Phase 100-120 | Single-Phase 200-240/ Three-Phase 200-240 | Three-Phase 200-240 |
| | Permissible Voltage Range | | −15～+10% | | −15～+10% |
| | Frequency | Hz | 50 / 60 | | 50 / 60 |
| | Permissible Frequency Range | | ±5% | | ±5% |
| | Rated Input Current | A | 4.6 | Single-Phase: 2.7/Three-Phase: 1.5 | 2.8 |
| | Maximum Input Current | A | 9.3 | Single-Phase: 4.9/Three-Phase: 3.4 | 5.1 |
| Rated Speed | | r/min | 3000 | | |
| Speed Control Range | | | 80～3600 r/min (Speed ratio 1:45) | | |
| Speed Regulation | Load | | ±0.2% or less: Conditions | 0 to rated torque, rated speed, rated voltage, normal temperature | |
| | Voltage | | ±0.2% or less: Conditions | Rated voltage −15～+10%, rated speed, no load, normal temperature | |
| | Temperature | | ±0.2% or less: Conditions | Operating ambient temperature 0～+40˚C, rated speed, no load, rated voltage | |

●The values correspond to each specification and characteristic of a stand-alone motor.

| Gear Ratio | | | 100*1 | 200*1 | 300 | 450 |
|---|---|---|---|---|---|---|
| (Actual gear ratio) | | | (104.1) | (196.4) | (300.5) | (450.8) |
| Gearhead Size Code | | | D | | K | |
| Rotation Direction | | | Opposite direction to the motor | | Same direction as the motor | |
| Output Shaft Rotation Speed [r/min]*2 | | 80 r/min | 0.8 | 0.4 | 0.27 | 0.18 |
| | | 3600 r/min | 36 | 18 | 12 | 8 |
| Permissible Torque [N·m] | 200 W | At 80～3000 r/min | – | – | 132 | 198 |
| | | At 3600 r/min | – | – | 92.3 | 138 |
| | 400 W | At 80～1500 r/min | 108 | 205 | 298 | 431 |
| | | At 3000 r/min | 81.9 | 164 | 219 | 302 |
| | | At 3600 r/min | 58.5 | 117 | 157 | 216 |
| Permissible Radial Load [N] | 10 mm from output shaft end | At 80～1500 r/min | 2888 | 3483 | 4461 | |
| | | At 3000 r/min | 2022 | 2438 | 3123 | |
| | | At 3600 r/min | 1444 | 1742 | 2231 | |
| | 20 mm from output shaft end | At 80～1500 r/min | 3496 | 4216 | 5174 | |
| | | At 3000 r/min | 2447 | 2951 | 3622 | |
| | | At 3600 r/min | 1748 | 2108 | 2587 | |
| Permissible Axial Load [N] | | At 80～1500 r/min | 422 | 461 | 686 | |
| | | At 3000 r/min | 295 | 323 | 480 | |
| | | At 3600 r/min | 211 | 231 | 343 | |
| Permissible Load Inertia J [×10$^{-4}$kg·m$^2$] | | At 80～1500 r/min | 100000 | 400000 | 900000 | 2025000 |
| | | At 3000 r/min | 36000 | 144000 | 324000 | 729000 |
| | | At 3600 r/min | 20250 | 81000 | 182250 | 410063 |
| | At instantaneous stop, instantaneous bi-directional operation*3 | At 80～1500 r/min | 33333 | 133333 | 300000 | 675000 |
| | | At 3000 r/min | 12000 | 48000 | 108000 | 243000 |
| | | At 3600 r/min | 6750 | 27000 | 60750 | 136688 |

◇About Load Position

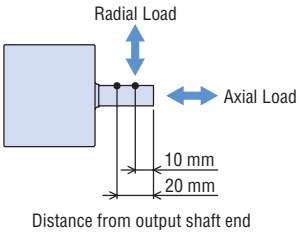


*1 For 400 W output only.
*2 The rotational speed of the output shaft is the value of the rotational speed divided by the gear ratio.
*3 It is also applicable when digitally setting the deceleration time to below 0.1 second.

## Speed – Torque Characteristics

Continuous Duty Region : Continuous operation is possible in this region.
Limited Duty Region : This region is used primarily when accelerating.

### ●200 W

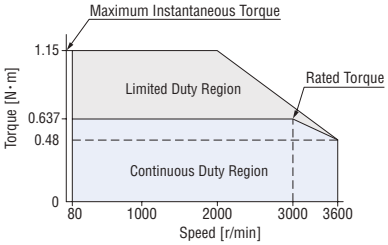


### ●400 W

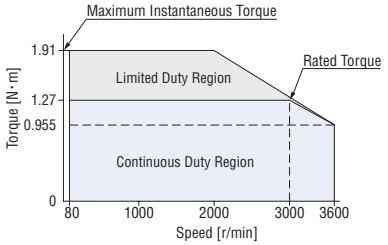


●The values correspond to each specification and characteristic of a stand-alone motor. The speed-torque characteristics shows the values when rated voltage is applied.

●The box ■ in a product name is replaced with the code (**D**, **K**) that represents the gearhead size.
A number in the box □ in the product name indicates the gear ratio.

# Legged Gearhead JB Gear 200 W, 400 W

## Specifications

| Product Name | Motor (Connector Type) | BLM5200HPK-5□B□B-L | | BLM5400HPK-5□B□B-L |
|---|---|---|---|---|
| | Driver | BMUD200-A | BMUD200-C | BMUD400-S |
| Rated Output Power (Continuous) W | | 200 | | 400 |
| Power Supply Input | Rated Voltage VAC | Single-Phase 100-120 | Single-Phase 200-240/Three-Phase 200-240 | Three-Phase 200-240 |
| | Permissible Voltage Range | −15～+10% | | −15～+10% |
| | Frequency Hz | 50 / 60 | | 50 / 60 |
| | Permissible Frequency Range | ±5% | | ±5% |
| | Rated Input Current A | 4.6 | Single-Phase: 2.7/Three-Phase: 1.5 | 2.8 |
| | Maximum Input Current A | 9.3 | Single-Phase: 4.9/Three-Phase: 3.4 | 5.1 |
| Rated Speed r/min | | 3000 | | |
| Speed Control Range | | 80～3600 r/min (Speed ratio 1:45) | | |
| Speed Regulation | Load | ±0.2% or less: Conditions | 0 to rated torque, rated speed, rated voltage, normal temperature | |
| | Voltage | ±0.2% or less: Conditions | Rated voltage −15～+10%, rated speed, no load, normal temperature | |
| | Temperature | ±0.2% or less: Conditions | Operating ambient temperature 0～+40°C, rated speed, no load, rated voltage | |

● The values correspond to each specification and characteristic of a stand-alone motor.

| Gear Ratio | | | 5 | 10 | 20 | 30 | 50 | 100 | 200 | 300 | 450 | 600 | 1200*1 |
|---|---|---|---|---|---|---|---|---|---|---|---|---|---|
| (Actual gear ratio) | | | (4.97) | (10.12) | (20.08) | (30.86) | (49.09) | (104.1) | (196.4) | (300.5) | (450.8) | (588.9) | (1178) |
| Gearhead Size Code | | | A | | | C | | E | | K | | S | |
| Rotation Direction | | | Same direction as the motor | | | | Opposite direction to the motor | | | Same direction as the motor | | | |
| Output Shaft Rotation Speed [r/min]*2 | | 80 r/min | 16 | 8 | 4 | 2.7 | 1.6 | 0.8 | 0.4 | 0.27 | 0.18 | 0.13 | 0.07 |
| | | 3600 r/min | 720 | 360 | 180 | 120 | 72 | 36 | 18 | 12 | 8 | 6 | 3 |
| Permissible Torque [N·m] | 200 W | At 80～3000 r/min | 2.4 | 4.9 | 9.7 | 13.0 | 22.5 | 48.4 | 91.3 | 132 | 198 | 259 | 518 |
| | | At 3600 r/min | 1.7 | 3.4 | 6.8 | 8.2 | 15.6 | 32.0 | 60.3 | 92.3 | 138 | 181 | 362 |
| | 400 W | At 80～1500 r/min | 5.4 | 10.9 | 21.7 | 31.7 | 49.9 | 108 | 205 | 298 | 431 | 583 | – |
| | | At 3000 r/min | 4.3 | 8.3 | 17.2 | 25.4 | 41.2 | 81.9 | 164 | 219 | 302 | 438 | – |
| | | At 3600 r/min | 3.1 | 5.9 | 12.3 | 18.2 | 29.4 | 58.5 | 117 | 157 | 216 | 313 | – |
| Permissible Radial Load [N] | 10 mm from output shaft end | At 80～1500 r/min | 521 | 977 | 1243 | 1824 | 2032 | 2888 | 3483 | 4461 | | 5245 | |
| | | At 3000 r/min | 365 | 684 | 870 | 1277 | 1422 | 2022 | 2438 | 3123 | | 3672 | |
| | | At 3600 r/min | 261 | 489 | 622 | 912 | 1016 | 1444 | 1742 | 2231 | | 2623 | |
| | 20 mm from output shaft end | At 80～1500 r/min | 663 | 1244 | 1582 | 2280 | 2540 | 3496 | 4216 | 5174 | | 5921 | |
| | | At 3000 r/min | 464 | 871 | 1107 | 1596 | 1778 | 2447 | 2951 | 3622 | | 4145 | |
| | | At 3600 r/min | 332 | 622 | 791 | 1140 | 1270 | 1748 | 2108 | 2587 | | 2961 | |
| Permissible Axial Load [N] | | At 80～1500 r/min | 39 | 88 | 177 | 255 | 275 | 422 | 461 | 686 | | 824 | |
| | | At 3000 r/min | 27.3 | 61.6 | 124 | 179 | 193 | 295 | 323 | 480 | | 577 | |
| | | At 3600 r/min | 19.5 | 44 | 88.5 | 128 | 138 | 211 | 231 | 343 | | 412 | |
| Permissible Load Inertia J [×10$^{-4}$kg·m$^2$] | At instantaneous stop, instantaneous bi-directional operation*3 | At 80～1500 r/min | 250 | 1000 | 4000 | 9000 | 25000 | 100000 | 400000 | 900000 | 2025000 | 3600000 | 14400000 |
| | | At 3000 r/min | 90 | 360 | 1440 | 3240 | 9000 | 36000 | 144000 | 324000 | 729000 | 1296000 | 5184000 |
| | | At 3600 r/min | 50.6 | 203 | 810 | 1823 | 5063 | 20250 | 81000 | 182250 | 410063 | 729000 | 2916000 |
| | | At 80～1500 r/min | 83.3 | 333 | 1333 | 3000 | 8333 | 33333 | 133333 | 300000 | 675000 | 1200000 | 4800000 |
| | | At 3000 r/min | 30 | 120 | 480 | 1080 | 3000 | 12000 | 48000 | 108000 | 243000 | 432000 | 1728000 |
| | | At 3600 r/min | 16.9 | 67.5 | 270 | 608 | 1688 | 6750 | 27000 | 60750 | 136688 | 243000 | 972000 |

*1 For 200 W output only.

*2 The rotational speed of the output shaft is the value of the rotational speed divided by the gear ratio.

*3 It is also applicable when digitally setting the deceleration time to below 0.1 second.

### ◇About Load Position

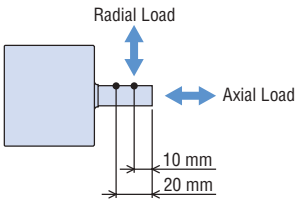


## Speed – Torque Characteristics

Continuous Duty Region : Continuous operation is possible in this region.
Limited Duty Region : This region is used primarily when accelerating.

### ●200 W

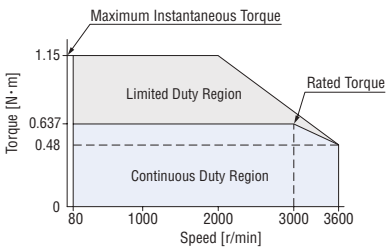


### ●400 W

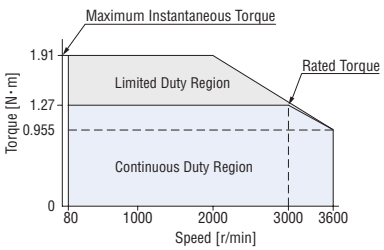


● The values correspond to each specification and characteristic of a stand-alone motor. The speed-torque characteristics shows the values when rated voltage is applied.

● The box ■ in a product name is replaced with the code (**A**, **C**, **E**, **K**, **S**) that represents the gearhead size.
A number in the box □ in the product name indicates the gear ratio.

# Hypoid Right-Angle Hollow Shaft JH Gear 60 W, 120 W

## Specifications

| Product Name | Motor (Connector Type) | | BLM460SHPK-4H□S | | BLM5120HPK-5H□S | |
|---|---|---|---|---|---|---|
| | Driver | | BMUD60-A2 | BMUD60-C2 | BMUD120-A2 | BMUD120-C2 |
| Rated Output Power (Continuous) | | W | 60 | | 120 | |
| Power Supply Input | Rated Voltage | VAC | Single-Phase 100-120 | Single-Phase 200-240/ Three-Phase 200-240 | Single-Phase 100-120 | Single-Phase 200-240/ Three-Phase 200-240 |
| | Permissible Voltage Range | | −15～+10% | | | |
| | Frequency | Hz | 50 / 60 | | | |
| | Permissible Frequency Range | | ±5% | | | |
| | Rated Input Current | A | 1.7 | Single-Phase: 1.0/ Three-Phase: 0.52 | 3.3 | Single-Phase: 2.0/ Three-Phase: 1.1 |
| | Maximum Input Current | A | 3.3 | Single-Phase: 1.9/ Three-Phase: 1.1 | 6.8 | Single-Phase: 4.1/ Three-Phase: 2.0 |
| Rated Speed | | r/min | 3000 | | | |
| Speed Control Range | | r/min | 80～3600 (Speed ratio 1:45) | | | |
| Speed Regulation | Load | | ±0.2% or less: Conditions | 0 to rated torque, rated speed, rated voltage , normal temperature | | |
| | Voltage | | ±0.2% or less: Conditions | Rated voltage −15～+10%, rated speed, no load, normal temperature | | |
| | Temperature | | ±0.2% or less: Conditions | Operating ambient temperature 0～+40˚C, rated speed, no load, rated voltage | | |

●The values correspond to each specification and characteristic of a stand-alone motor.

| Gear Ratio | | | | 10 | 15 | 20 | 30 | 50 | 100 | 200 |
|---|---|---|---|---|---|---|---|---|---|---|
| (Actual gear ratio) | | | | (10.25) | (15.38) | (20.50) | (30.75) | (51.25) | (102.5) | (205.0) |
| Rotation Direction*1 | | | | Same direction as the motor | | | | | Opposite direction to the motor | |
| Output Shaft Rotation Speed [r/min]*2 | | | 80 r/min | 8 | 5.3 | 4 | 2.7 | 1.6 | 0.8 | 0.4 |
| | | | 3600 r/min | 360 | 240 | 180 | 120 | 72 | 36 | 18 |
| Permissible Torque [N·m] | | 60W | At 80～1500 r/min | 1.2 | 1.8 | 2.7 | 4.0 | 6.7 | 13.3 | 20.6 |
| | | | At 3000 r/min | 1.2 | 1.8 | 2.5 | 3.8 | 6.4 | 12.7 | 15.6 |
| | | | At 3600 r/min | 0.74 | 1.1 | 1.8 | 2.7 | 4.4 | 8.9 | 11.5 |
| | | 120W | At 80～1500 r/min | 3.2 | 4.8 | 6.5 | 9.7 | 16.0 | 32.3 | 53.9 |
| | | | At 3000 r/min | 2.5 | 3.8 | 5.1 | 7.6 | 12.7 | 25.5 | 41.0 |
| | | | At 3600 r/min | 1.8 | 2.6 | 3.5 | 5.3 | 8.8 | 17.7 | 30.2 |
| Permissible Radial Load [N]*3 | 20 mm from installation surface | 60W | At 80～1500 r/min | 265 | 341 | 417 | 531 | 682 | 758 | 836 |
| | | | At 3000 r/min | 201 | 259 | 317 | 404 | 518 | 576 | 635 |
| | | | At 3600 r/min | 148 | 191 | 234 | 297 | 382 | 424 | 468 |
| | | 120W | At 80～1500 r/min | 363 | 484 | 605 | 806 | 971 | 1045 | 1127 |
| | | | At 3000 r/min | 276 | 368 | 460 | 613 | 738 | 794 | 857 |
| | | | At 3600 r/min | 203 | 271 | 339 | 451 | 544 | 585 | 631 |
| Permissible Axial Load [N] | | 60W | At 80～1500 r/min | 88 | 108 | 137 | 177 | 226 | 245 | 275 |
| | | | At 3000 r/min | 67 | 82 | 104 | 135 | 172 | 186 | 209 |
| | | | At 3600 r/min | 49 | 60 | 77 | 99 | 127 | 137 | 154 |
| | | 120W | At 80～1500 r/min | 108 | 147 | 186 | 245 | 294 | 324 | 343 |
| | | | At 3000 r/min | 82 | 112 | 141 | 186 | 223 | 246 | 261 |
| | | | At 3600 r/min | 60 | 82 | 104 | 137 | 165 | 181 | 192 |
| Permissible Load Inertia J [$\times 10^{-4}$kg·m$^2$] | | 60W | At 80～1500 r/min | 100 | 225 | 400 | 900 | 2500 | 10000 | 40000 |
| | | | At 3000 r/min | 36 | 81 | 144 | 324 | 900 | 3600 | 14400 |
| | | | At 3600 r/min | 20.3 | 45.6 | 81 | 182 | 506 | 2025 | 8100 |
| | | 120W | At 80～1500 r/min | 200 | 450 | 800 | 1800 | 5000 | 20000 | 80000 |
| | | | At 3000 r/min | 72 | 162 | 288 | 648 | 1800 | 7200 | 28800 |
| | | | At 3600 r/min | 40.5 | 91.1 | 162 | 365 | 1013 | 4050 | 16200 |
| | At instantaneous stop, instantaneous bi-directional operation*4 | 60W | At 80～1500 r/min | 33.3 | 75 | 133 | 300 | 833 | 3333 | 13333 |
| | | | At 3000 r/min | 12 | 27 | 48 | 108 | 300 | 1200 | 4800 |
| | | | At 3600 r/min | 6.8 | 15.2 | 27 | 60.8 | 169 | 675 | 2700 |
| | | 120W | At 80～1500 r/min | 66.7 | 150 | 267 | 600 | 1667 | 6667 | 26667 |
| | | | At 3000 r/min | 24 | 54 | 96 | 216 | 600 | 2400 | 9600 |
| | | | At 3600 r/min | 13.5 | 30.4 | 54 | 122 | 338 | 1350 | 5400 |

*1 The rotational direction is viewed from the gear flange surface (Figure on the right).
*2 The rotational speed of the output shaft is the value of the rotational speed divided by the gear ratio.
*3 The radial load at each distance can also be calculated with a formula. ➜ Page 04-51
*4 It is also applicable when digitally setting the deceleration time to below 0.1 second.

### ◇Gear Flange Position

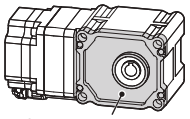

Gear flange

### ◇About Load Position

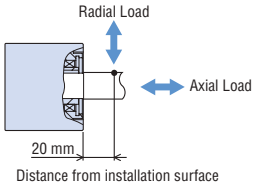


●A number in the box □ in the product name indicates the gear ratio.

## Speed – Torque Characteristics

Continuous Duty Region : Continuous operation is possible in this region.
Limited Duty Region : This region is used primarily when accelerating.

### 60 W

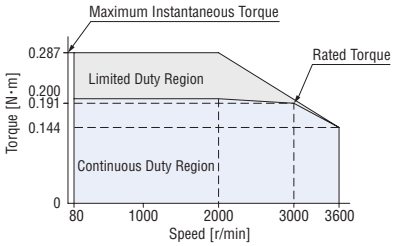


### 120 W

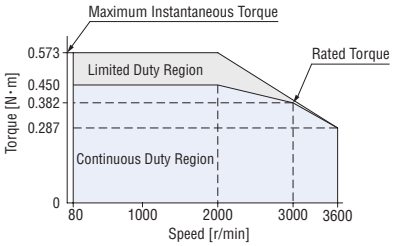


The values correspond to each specification and characteristic of a stand-alone motor. The speed-torque characteristics shows the values when rated voltage is applied.

# Hypoid Right-Angle Hollow Shaft JH Gear 200 W, 400 W

## Specifications

| Product Name | Motor (Connector Type) | | BLM5200HPK-5□H□S | | BLM5400HPK-5□H□S |
|---|---|---|---|---|---|
| | Driver | | BMUD200-A | BMUD200-C | BMUD400-S |
| Rated Output Power (Continuous) | | W | 200 | | 400 |
| Power Supply Input | Rated Voltage | VAC | Single-Phase 100-120 | Single-Phase 200-240/ Three-Phase 200-240 | Three-Phase 200-240 |
| | Permissible Voltage Range | | −15～+10% | | −15～+10% |
| | Frequency | Hz | 50 / 60 | | 50 / 60 |
| | Permissible Frequency Range | | ±5% | | ±5% |
| | Rated Input Current | A | 4.6 | Single-Phase: 2.7/Three-Phase: 1.5 | 2.8 |
| | Maximum Input Current | A | 9.3 | Single-Phase: 4.9/Three-Phase: 3.4 | 5.1 |
| Rated Speed | | r/min | 3000 | | |
| Speed Control Range | | | 80～3600 r/min (Speed ratio 1:45) | | |
| Speed Regulation | Load | | ±0.2% or less: Conditions | 0 to rated torque, rated speed, rated voltage, normal temperature | |
| | Voltage | | ±0.2% or less: Conditions | Rated voltage −15～+10%, rated speed, no load, normal temperature | |
| | Temperature | | ±0.2% or less: Conditions | Operating ambient temperature 0～+40˚C, rated speed, no load, rated voltage | |

●The values correspond to each specification and characteristic of a stand-alone motor.

| Gear Ratio | | | 5 | 10 | 15 | 20 | 30 | 50 | 100 | 200 |
|---|---|---|---|---|---|---|---|---|---|---|
| (Actual gear ratio) | | | (5) | (10) | (15) | (20) | (30) | (50) | (98.95) | (200) |
| Gearhead Size Code | | | X | | | | | | Y | |
| Rotation Direction*1 | | | Same direction as the motor | | | | | | Opposite direction to the motor | |
| Output Shaft Rotation Speed [r/min]*2 | | 80 r/min | 16 | 8 | 5.3 | 4 | 2.7 | 1.6 | 0.8 | 0.4 |
| | | 3600 r/min | 720 | 360 | 240 | 180 | 120 | 72 | 36 | 18 |
| Permissible Torque [N·m] | 200 W | At 80～3000 r/min | 2.1 | 4.1 | 6.2 | 8.3 | 13.4 | 22.3 | 41.0 | 82.8 |
| | | At 3600 r/min | 1.3 | 2.6 | 4.0 | 5.3 | 9.4 | 15.6 | 28.5 | 57.6 |
| | 400 W | At 80～1500 r/min | 4.8 | 9.5 | 14.3 | 19.1 | 30.5 | 50.8 | 88.0 | 178 |
| | | At 3000 r/min | 3.8 | 7.7 | 11.9 | 16.1 | 23.1 | 38.5 | 73.5 | 128 |
| | | At 3600 r/min | 2.7 | 5.5 | 8.5 | 11.5 | 16.5 | 27.5 | 52.5 | 92.0 |
| Permissible Radial Load [N]*3 | 20 mm from installation surface | At 80～1500 r/min | 1346 | 1663 | 1882 | 2035 | 2309 | 2681 | 3436 | |
| | | At 3000 r/min | 942 | 1164 | 1317 | 1425 | 1616 | 1877 | 2405 | |
| | | At 3600 r/min | 673 | 832 | 941 | 1018 | 1155 | 1341 | 1718 | |
| Permissible Axial Load [N] | | At 80～1500 r/min | 307 | 380 | 429 | 466 | 527 | 613 | 785 | |
| | | At 3000 r/min | 215 | 266 | 300 | 326 | 369 | 429 | 550 | |
| | | At 3600 r/min | 154 | 190 | 215 | 233 | 264 | 307 | 393 | |
| Permissible Load Inertia J [×10$^{-4}$kg·m$^2$] | | At 80～1500 r/min | 250 | 1000 | 2250 | 4000 | 9000 | 25000 | 100000 | 400000 |
| | | At 3000 r/min | 90 | 360 | 810 | 1440 | 3240 | 9000 | 36000 | 144000 |
| | | At 3600 r/min | 50.6 | 203 | 456 | 810 | 1823 | 5063 | 20250 | 81000 |
| | At instantaneous stop, instantaneous bi-directional operation*4 | At 80～1500 r/min | 83.3 | 333 | 750 | 1333 | 3000 | 8333 | 33333 | 133333 |
| | | At 3000 r/min | 30 | 120 | 270 | 480 | 1080 | 3000 | 12000 | 48000 |
| | | At 3600 r/min | 16.9 | 67.5 | 152 | 270 | 608 | 1688 | 6750 | 27000 |

*1 The rotational direction is viewed from the gear flange surface (Figure on the right).
*2 The rotational speed of the output shaft is the value of the rotational speed divided by the gear ratio.
*3 The radial load at each distance can also be calculated with a formula. ➜ Page 04-51
*4 It is also applicable when digitally setting the deceleration time to below 0.1 second.

◇Gear Flange Position

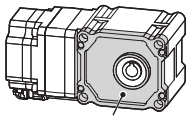


◇About Load Position

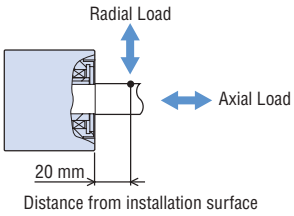


## Speed – Torque Characteristics

Continuous Duty Region : Continuous operation is possible in this region.
Limited Duty Region : This region is used primarily when accelerating.

### 200 W

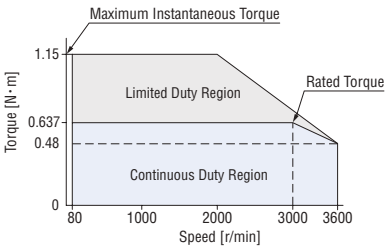


### 400 W

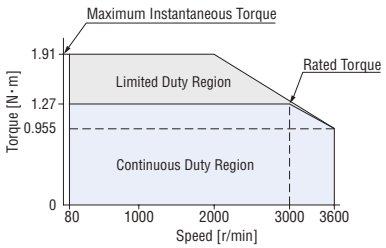


●The values correspond to each specification and characteristic of a stand-alone motor. The speed-torque characteristics shows the values when rated voltage is applied.

●The box ■ in a product name is replaced with the code (**X**, **Y**) that represents the gearhead size.
A number in the box □ in the product name indicates the gear ratio.

# Round Shaft 30 W, 60 W, 120 W

## Specifications

| Product Name | | | BLM230-A2 | | BLM260-A2 | | BLM5120-A2 | |
|---|---|---|---|---|---|---|---|---|
| | Motor | Cable Type | BLM230HP-AS | | BLM260HP-AS | | BLM5120HP-AS | |
| | | Connector Type | | | | | | |
| | Driver | | BMUD30-A2 | BMUD30-C2 | BMUD60-A2 | BMUD60-C2 | BMUD120-A2 | BMUD120-C2 |
| Rated Output Power (Continuous) | | W | 30 | | 60 | | 120 | |
| Power Supply Input | Rated Voltage | VAC | Single-Phase 100-120 | Single-Phase 200-240/ Three-Phase 200-240 | Single-Phase 100-120 | Single-Phase 200-240/ Three-Phase 200-240 | Single-Phase 100-120 | Single-Phase 200-240/ Three-Phase 200-240 |
| | Permissible Voltage Range | | −15～+10% | | −15～+10% | | −15～+10% | |
| | Frequency | Hz | 50 / 60 | | 50 / 60 | | 50 / 60 | |
| | Permissible Frequency Range | | ±5% | | ±5% | | ±5% | |
| | Rated Input Current | A | 1.2 | Single-Phase: 0.7/ Three-Phase: 0.38 | 1.7 | Single-Phase: 1.0/ Three-Phase : 0.52 | 3.3 | Single-Phase: 2.0/ Three-Phase: 1.1 |
| | Maximum Input Current | A | 2.0 | Single-Phase: 1.2/ Three-Phase: 0.75 | 3.3 | Single-Phase: 1.9/ Three-Phase: 1.1 | 6.8 | Single-Phase: 4.1/ Three-Phase: 2.0 |
| Rated Speed | | r/min | 3000 | | | | | |
| Speed Control Range | | | 80～4000 r/min (Speed ratio 1:50) | | | | | |
| Rated Torque | | N·m | 0.096 | | 0.191 | | 0.382 | |
| Maximum Instantaneous Torque | | N·m | 0.144 | | 0.287 | | 0.573 | |
| Permissible Radial Load | 10 mm from output shaft end | N | 80 | | 80 | | 150 | |
| | 20 mm from output shaft end | N | 100 | | 100 | | 170 | |
| Permissible Axial Load | | | Half of motor mass or less | | | | | |
| Rotor Inertia J | | $\times10^{-4}$kg·m$^2$ | 0.042 | | 0.082 | | 0.23 | |
| Permissible Load Inertia J | | $\times10^{-4}$kg·m$^2$ | 1.8 | | 3.75 | | 5.6 | |
| Speed Regulation | Load | | ±0.2% or less: Conditions 0 to rated torque, rated speed, rated voltage, normal temperature | | | | | |
| | Voltage | | ±0.2% or less: Conditions Rated voltage −15～+10%, rated speed, no load, normal temperature | | | | | |
| | Temperature | | ±0.2% or less: Conditions Operating ambient temperature 0～+40°C, rated speed, no load, rated voltage | | | | | |

### ◇About Load Position

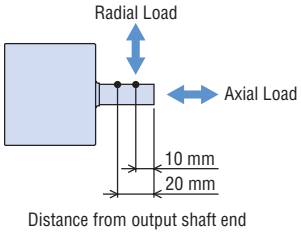


## Speed – Torque Characteristics

Continuous Duty Region : Continuous operation is possible in this region.
Limited Duty Region : This region is used primarily when accelerating.

### 30 W

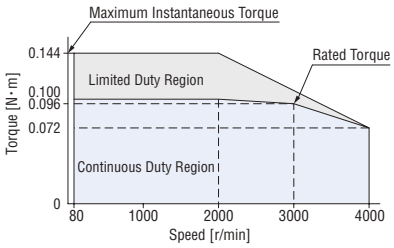


### 60 W

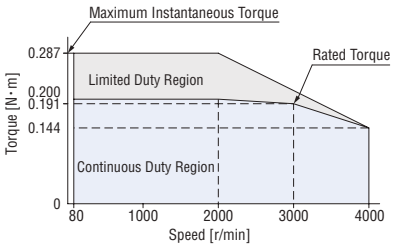


### 120 W

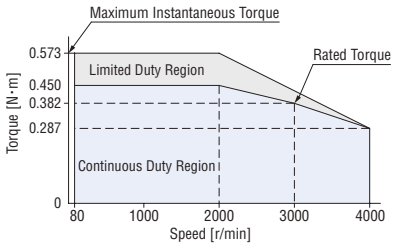


● The speed-torque characteristics shows the values when rated voltage is applied.

# Round Shaft 200 W, 400 W

## Specifications

| Product Name | | | | BLM5200-A | | BLM5400-A |
|---|---|---|---|---|---|---|
| | Motor | Cable Type | | BLM5200HP-AS | | BLM5400HP-AS |
| | | Connector Type | | | | |
| | Driver | | | BMUD200-A | BMUD200-C | BMUD400-S |
| Rated Output Power (Continuous) | | | W | 200 | | 400 |
| Power Supply Input | Rated Voltage | | VAC | Single-Phase 100-120 | Single-Phase 200-240/ Three-Phase 200-240 | Three-Phase 200-240 |
| | Permissible Voltage Range | | | −15～+10% | | −15～+10% |
| | Frequency | | Hz | 50 / 60 | | 50 / 60 |
| | Permissible Frequency Range | | | ±5% | | ±5% |
| | Rated Input Current | | A | 4.6 | Single-Phase: 2.7/Three-Phase: 1.5 | 2.8 |
| | Maximum Input Current | | A | 9.3 | Single-Phase: 4.9/Three-Phase: 3.4 | 5.1 |
| Rated Speed | | | r/min | 3000 | | |
| Speed Control Range | | | | 80～4000 r/min (Speed ratio 1:50) | | |
| Rated Torque | | | N·m | 0.637 | | 1.27 |
| Maximum Instantaneous Torque | | | N·m | 1.15 | | 1.91 |
| Permissible Radial Load | 10 mm from output shaft end | | N | 150 | | |
| | 20 mm from output shaft end | | N | 170 | | |
| Permissible Axial Load | | | | Half of motor mass or less | | |
| Rotor Inertia J | | | $\times10^{-4}$kg·m$^2$ | 0.454 | | 0.67 |
| Permissible Load Inertia J | | | $\times10^{-4}$kg·m$^2$ | 8.75 | | 15 |
| Speed Regulation | Load | | | ±0.2% or less: Conditions | 0 to rated torque, rated speed, rated voltage, normal temperature | |
| | Voltage | | | ±0.2% or less: Conditions | Rated voltage −15～+10%, rated speed, no load, normal temperature | |
| | Temperature | | | ±0.2% or less: Conditions | Operating ambient temperature 0～+40˚C, rated speed, no load, rated voltage | |

### ◇About Load Position

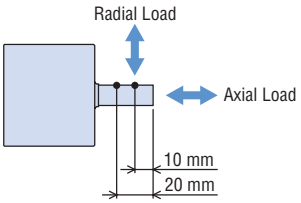


Distance from output shaft end

## Speed – Torque Characteristics

Continuous Duty Region : Continuous operation is possible in this region.
Limited Duty Region : This region is used primarily when accelerating.

### ●200 W

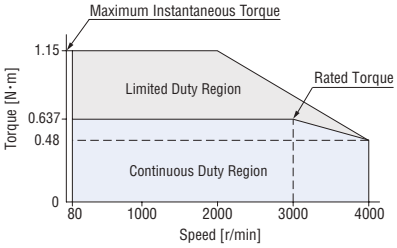


### ●400 W

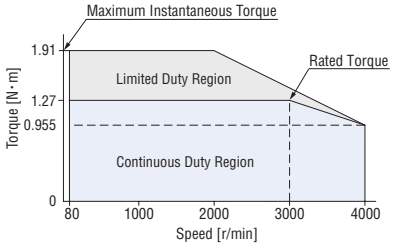


●The speed-torque characteristics shows the values when rated voltage is applied.

## Common Specifications

| Items | Specifications | |
|---|---|---|
| | 30 W, 60 W, 120 W | 200 W, 400 W |
| Speed Setting Methods | Digital setting by the dial<br>4 speed settings possible | |
| Acceleration/ Deceleration Time | Analog setting: 0.1～15.0 s (Time setting from stopped state until reaching the rated speed) Common settings for acceleration/deceleration time with the use of acceleration/deceleration time potentiometer*<br>Digital setting: 0.0～15.0 s (Time setting from current speed to the setting speed) Individual settings for acceleration time/deceleration time for each operating data*<br>* Acceleration time/deceleration time varies with the load condition of the motor. | |
| Input Signals | Photocoupler input Input resistance: 5.7 kΩ<br>Run by internal power supply: 5 VDC<br>Connectable external DC power supply: 24 VDC −15～+20% 100 mA or more<br>Sink input/Source input Supplied through external wiring | Photocoupler input Input resistance: 6.6 kΩ<br>Run by internal power supply: 5 VDC<br>Connectable external DC power supply: 24 VDC −15～+20% 100 mA or more<br>Sink input/Source input Supplied through external wiring |
| | Signals can be assigned randomly to X0～X2 inputs (3 points)<br>[FWD], [REV], [M0], M1, ALARM-RESET,<br>EXT-ERROR, H-FREE [ ]: Initial setting | Signals can be assigned randomly to IN0～IN4 inputs (5 points)<br>[FWD], [REV], [M0], [M1], [ALARM-RESET],<br>EXT-ERROR, H-FREE [ ]: Initial setting |
| Output Signals | Photocoupler and open collector output<br>External power supply: 4.5～30 VDC 100 mA or less<br>Sink output/Source output Supplied through external wiring | Photocoupler and open collector output<br>External power supply: 4.5～30 VDC 100 mA or less<br>Sink output/Source output Supplied through external wiring |
| | Signals can be assigned randomly to Y0 and Y1 outputs (2 points)<br>[ALARM-OUT1], [SPEED-OUT], ALARM-OUT2,<br>MOVE, VA, WNG [ ]: Initial setting | Signals can be assigned randomly to OUT0 and OUT1 outputs (2 points)<br>[ALARM-OUT1], [SPEED-OUT], ALARM-OUT2,<br>MOVE, VA, WNG [ ]: Initial setting |
| Protective Function | When the following protective functions are activated, ALARM-OUT1 output turns OFF and the motor will undergo a coasting stop.<br>At the same time, the alarm code will be displayed. (Instantaneous stop for external stop only)<br>Overcurrent, main circuit overheating, overvoltage, undervoltage, sensor error, overload, overspeed, EEPROM error, initial sensor error, initial operation inhibition, external stop | |
| Max. Extension Distance | Motor and driver distance 10.5 m [When using an optional connection cable (for relay)] | |
| Time Rating | Continuous | |

Overload alarm detection time

The overload alarm is generated if the operation goes beyond the continuous duty region.
The detection time for this overload alarm can be set from 0.1～60.0 seconds. (Initial setting: 30.0 seconds)
However, alarm will be generated within 5 seconds in the following cases:
- If an applied load goes beyond the limited duty region
- If the output shaft is locked

## General Specifications

| Items | | Motor | Driver |
|---|---|---|---|
| Insulation Resistance | | The measured value is 100 MΩ or more when 500 VDC megger is applied between the windings and the case after continuous operation under normal ambient temperature and humidity. | The measured value is 100 MΩ or more when 500 VDC megger is applied between the power supply terminal and the protective earth terminal, and between the power supply terminal and the I/O signal terminal after continuous operation under normal ambient temperature and humidity. |
| Dielectric Strength Voltage | | Sufficient to withstand 1.5 kVAC at 50 Hz applied between the windings and the case for 1 minute after continuous operation under normal ambient temperature and humidity. | No abnormality is judged even with application of 1.5 kVAC at 50 Hz between the power supply terminal and the protective earth terminal, and with application of 1.5 kVAC at 50 Hz between the power supply terminal and the I/O terminal, for 1 minute after continuous operation under normal ambient temperature and humidity. |
| Temperature Rise | | Temperature rise of the windings is 50˚C max. (60˚C or less for 400 W) and that of the case is 40˚C max. (50˚C or less for 400 W)*1, measured by the thermocouple method after rated continuous operation under normal ambient temperature and humidity. | Temperature rise of the heat sink is 50˚C or less measured by the thermocouple method after rated continuous operation under normal ambient temperature and humidity. |
| Operating Environment | Ambient Temperature | 0～+40˚C<br>(Non-freezing) | 0～+40˚C (Non-freezing)<br>[Only when the 400 W type driver is mounted facing the front upward<br>0～+35˚C (non-freezing) See Page 04-47 to identify the front of the driver.] |
| | Ambient Humidity | 85% or less (Non-condensing) | |
| | Altitude | Up to 1000 m above sea level | |
| | Atmosphere | No corrosive gases or dust. The product should not be exposed to oil. Cannot be used in a radioactive area, magnetic field, vacuum, or other special environments. | |
| | Vibration | Not subject to continuous vibration or excessive shock. Conforms to JIS C 60068-2-6 "Sine-wave vibration test method"<br>Frequency range: 10～55 Hz, Pulsating amplitude: 0.15 mm, Sweep direction: 3 directions (X, Y, Z), Number of sweeps: 20 times | |
| Storage Condition*2 | Ambient Temperature | −20～+70˚C (−10～+60˚C for **JV** Gear, **JB** Gear, **JH** Gear)<br>(Non-freezing) | −25～+70˚C (Non-freezing) |
| | Ambient Humidity | 85% or less (Non-condensing) | |
| | Altitude | Up to 3000 m above sea level (Up to 1000 m above sea level for **JV** Gear, **JB** Gear, **JH** Gear) | |
| | Atmosphere | No corrosive gases or dust. The product should not be exposed to water or oil. Cannot be used in a radioactive area, magnetic field, vacuum, or other special environments. | |
| Heat-resistant Class | | UL/CSA Standards: 105 (A), EN Standards: 120 (E) | – |
| Degree of Protection*3 | | Cable Type: IP40<br>Connector Type<br>**GFV** Gear, **JH** Gear, **JV** Gear, Round shaft: IP66<br>(Except the installation surface of the round shaft type)<br>**JB** Gear: IP44<br>(Except the connector for driver connection when a cable is connected) | IP20 |

*1 For round shaft types, attach to a heat sink (material: aluminum) of one of the following sizes to keep the motor case surface temperature from exceeding 90˚C.
30 W type: 115×115 mm Thickness 5 mm, 60 W type: 135×135 mm Thickness 5 mm, 120 W type: 165×165 mm Thickness 5 mm,
200 W type: 200×200 mm Thickness 5 mm, 400 W type: 250×250 mm Thickness 6 mm
*2 The storage condition applies to short periods such as the period during transportation.
*3 The IP indication representing the dust-resistant and watertight performances are defined in IEC 60529 and IEC 60034-5.

Note

- Do not measure insulation resistance or perform a dielectric strength test while the motor and driver are connected.

### Materials and Surface Treatment of IP66 Specifications (Motors/Gearheads)

- Material Case: Aluminum, Output shaft: Stainless steel, and Screws: Stainless steel (Externally exposed portion only, except for the protective earth terminal)
- Surface Treatment Case: Coated (except for the installation surfaces of the **GFV** gears and round shaft types)

# Dimensions (Unit: mm)

## Motors (Cable type)

- "Installation screws" are included. Dimensions of Installation Screws ➜ Page 04-43
- A number in the box □ in the product name indicates the gear ratio.

### ◇Parallel Shaft Gearhead **GFV** Gear・30 W

2D & 3D CAD

| Product Name | Motor Product Name | Gearhead Product Name | Gear Ratio | L | Mass kg | 2D CAD |
|---|---|---|---|---|---|---|
| **BLM230-□B** | BLM230-GFV2 | GFV2G□ | **5～20** | 34 | 0.92 | A1360A |
| | | | **30～100** | 38 | | A1360B |
| | | | **200** | 43 | | A1360C |

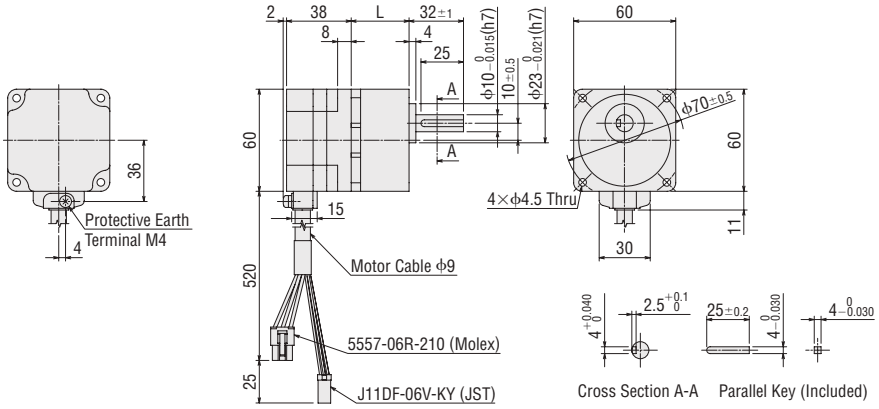


### ◇Round Shaft Type・30 W

**BLM230-A2**

Mass: 0.42 kg

2D CAD A1362 3D CAD

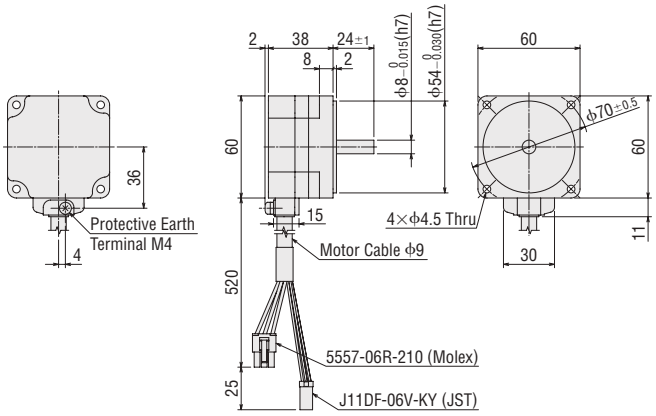


### ◇Parallel Shaft Gearhead **GFV** Gear・60 W

2D & 3D CAD

| Product Name | Motor Product Name | Gearhead Product Name | Gear Ratio | L | Mass kg | 2D CAD |
|---|---|---|---|---|---|---|
| **BLM460S-□B** | BLM460S-GFV2 | GFV4G□ | **5～20** | 41 | 1.6 | A1366A |
| | | | **30～100** | 46 | | A1366B |
| | | | **200** | 51 | | A1366C |

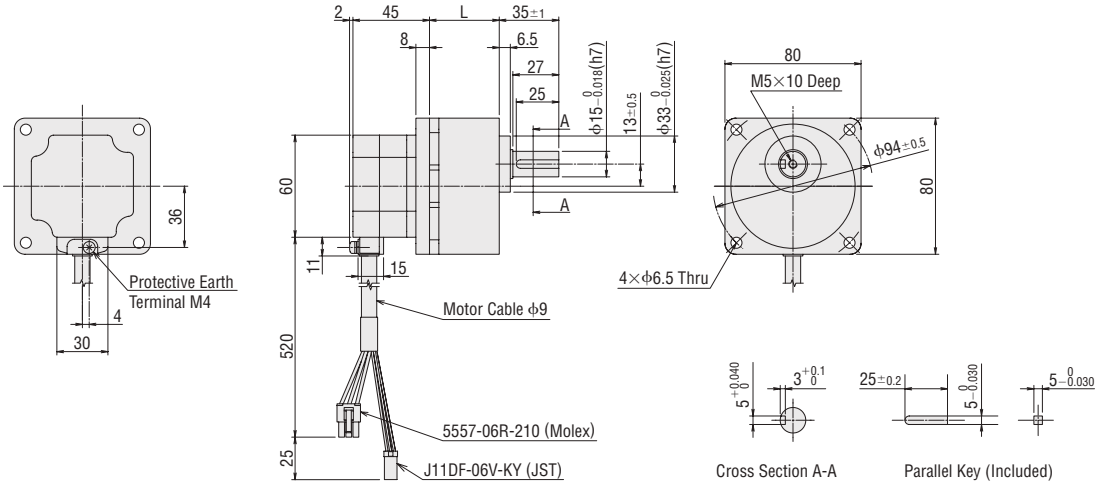

## ◇Round Shaft Type・60 W

**BLM260-A2**

Mass: 0.55 kg

2D CAD A1368 3D CAD

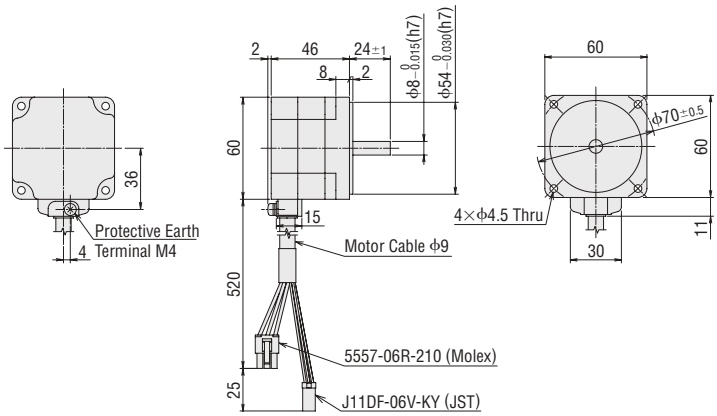


## ◇Parallel Shaft Gearhead **GFV** Gear・120 W

2D & 3D CAD

| Product Name | Motor Product Name | Gearhead Product Name | Gear Ratio | L | Mass kg | 2D CAD |
|---|---|---|---|---|---|---|
| **BLM5120-□B** | BLM5120-GFV2 | GFV5G□ | **5～20** | 45 | 2.7 | A1372A |
| | | | **30～100** | 58 | | A1372B |
| | | | **200** | 64 | | A1372C |

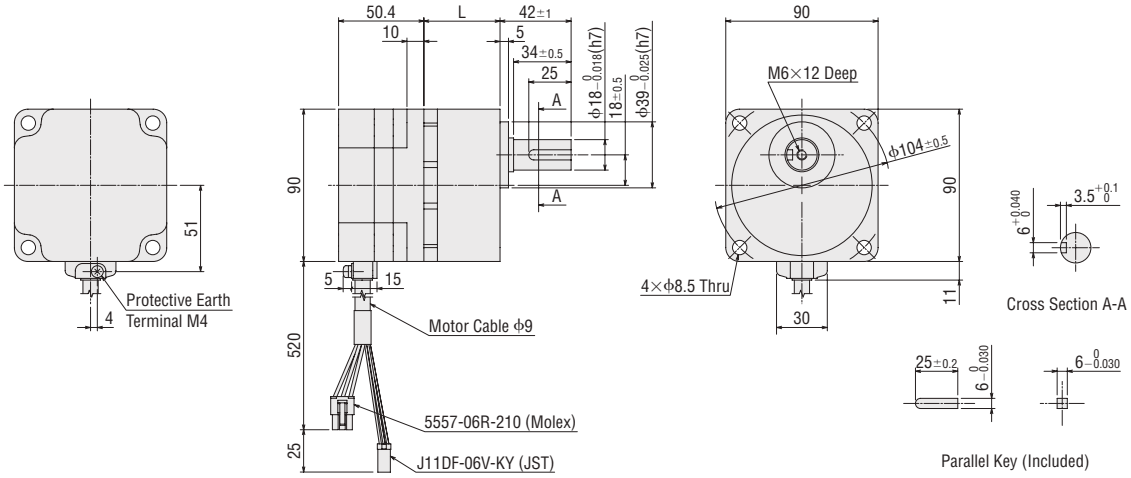


## ◇Round Shaft Type・120 W

**BLM5120-A2**

Mass: 1.2 kg

2D CAD A1374 3D CAD

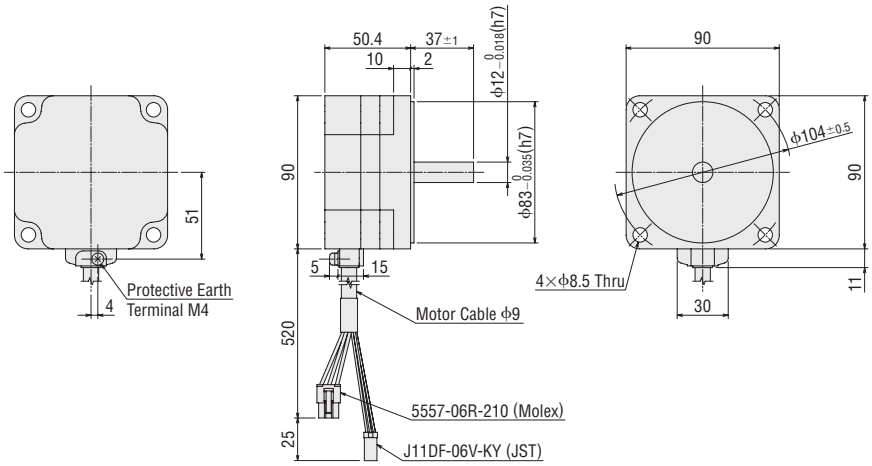

## ◇Parallel Shaft Gearhead **GFV** Gear・200 W

2D & 3D CAD

| Product Name | Motor Product Name | Gearhead Product Name | Gear Ratio | L | Mass kg | 2D CAD |
|---|---|---|---|---|---|---|
| **BLM6200S-□B** | BLM6200S-GFV | GFV6G□ | **5～20** | 60 | 4.8 | A1340A |
| | | | **30, 50** | 72 | | A1340B |
| | | | **100, 200** | 86 | | A1340C |

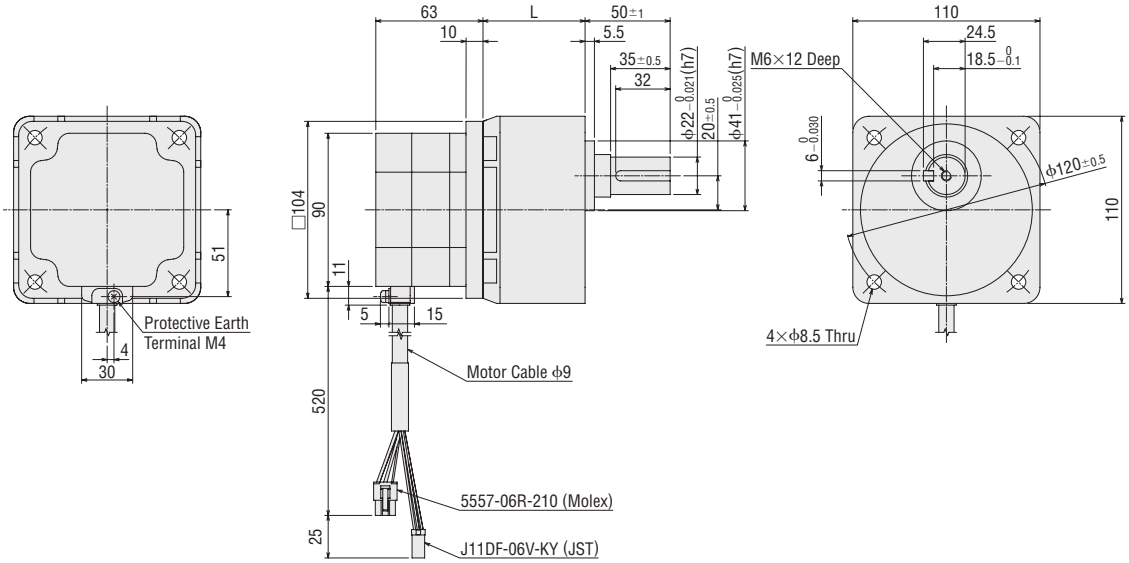


●At the time of shipment, the parallel key is fixed in the key slot of the gearhead shaft.

## ◇Round Shaft Type・200 W

**BLM5200-A**

Mass: 1.7 kg

2D CAD A1341 3D CAD

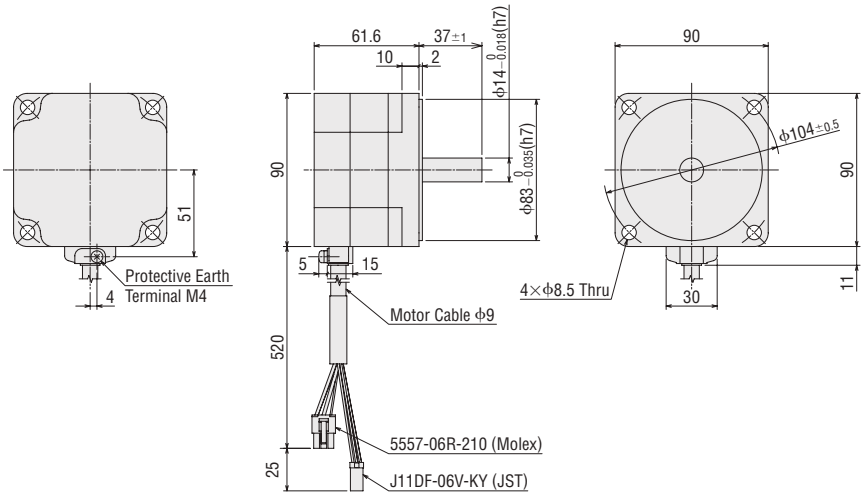


04

BMU Series

## ◇Parallel Shaft Gearhead **GFV** Gear・400 W

2D & 3D CAD

| Product Name | Motor Product Name | Gearhead Product Name | Gear Ratio | L | Mass kg | 2D CAD |
|---|---|---|---|---|---|---|
| **BLM6400S-□B** | BLM6400S-GFV | GFV6G□ | **5**～**20** | 60 | 5.3 | A1413A |
| | | | **30**, **50** | 72 | | A1413B |

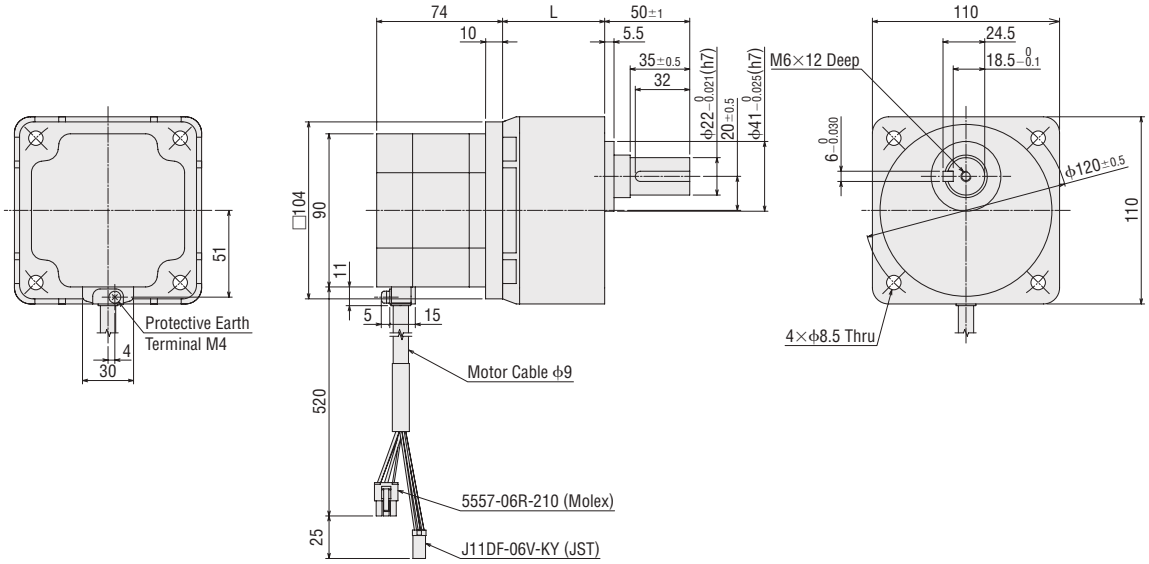


●At the time of shipment, the parallel key is fixed in the key slot of the gearhead shaft.

## ◇Round Shaft Type・400 W

**BLM5400-A**

Mass: 2.2 kg

2D CAD A1415 3D CAD

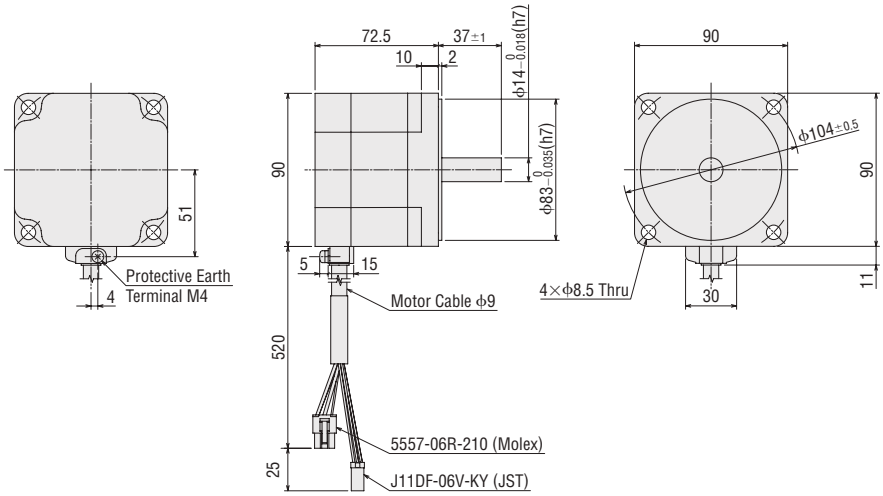

## Motors (Connector type)

- The dimensions drawing of the motor is an example where a separately sold connection cable ( ▭ portion in the figure) is connected.
  The described mass does not include the connection cable. Cable Dimensions and Mass ➜ Page 04-42
- "Installation screws" are included. Dimensions of Installation Screws ➜ Page 04-43
- A number in the box □ in the product name indicates the gear ratio.
  The box ■ in a product name is replaced with the code that represents the gearhead size.

### ◇Parallel Shaft Gearhead **GFV** Gear・30 W

2D & 3D CAD

| Product Name | Motor Product Name | Gearhead Product Name | Gear Ratio | L | Mass kg | 2D CAD | |
|---|---|---|---|---|---|---|---|
| | | | | | | Connection cable drawing from the output shaft side is connected | Connection cable drawing from the counter-output shaft side is connected |
| **BLM230HP-□S**<br>**BLM230HP-□SF** | BLM230HP-GFV | GFV2G□S<br>GFV2G□SF | **5**～**20** | 34 | 0.63 | A1465A | A1466A |
| | | | **30**～**100** | 38 | 0.68 | A1465B | A1466B |
| | | | **200** | 43 | 0.73 | A1465C | A1466C |

#### •When connecting the connection cable drawing from the output shaft side

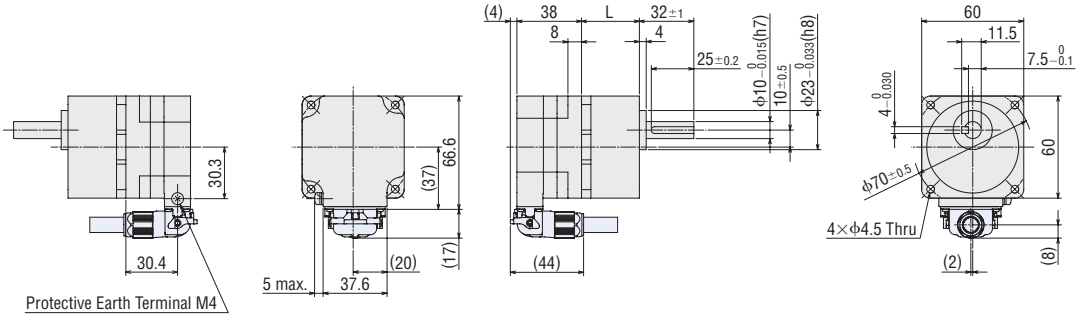


- At the time of shipment, the parallel key is fixed in the key slot of the gearhead shaft.

#### •When connecting the connection cable drawing from the counter-output shaft side

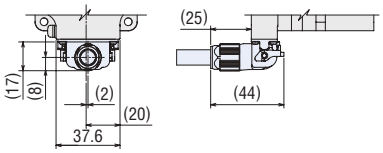


### ◇Round Shaft Type・30 W

**BLM230HP-AS**

Mass: 0.35 kg

2D CAD A1475 3D CAD

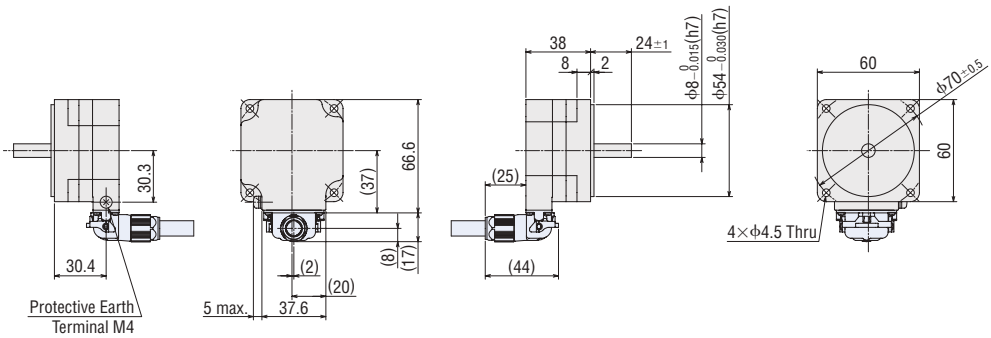

## ◇Parallel Shaft Gearhead **GFV** Gear・60 W

2D & 3D CAD

| Product Name | Motor Product Name | Gearhead Product Name | Gear Ratio | L | Mass kg | 2D CAD | |
|---|---|---|---|---|---|---|---|
| | | | | | | Connection cable drawing from the output shaft side is connected | Connection cable drawing from the counter-output shaft side is connected |
| **BLM460SHP-□S**<br>**BLM460SHP-□SF** | BLM460SHP-GFV | GFV4G□S<br>GFV4G□SF | **5～20** | 41 | 1.3 | A1467A | A1468A |
| | | | **30～100** | 46 | 1.4 | A1467B | A1468B |
| | | | **200** | 51 | 1.5 | A1467C | A1468C |

### •When connecting the connection cable drawing from the output shaft side

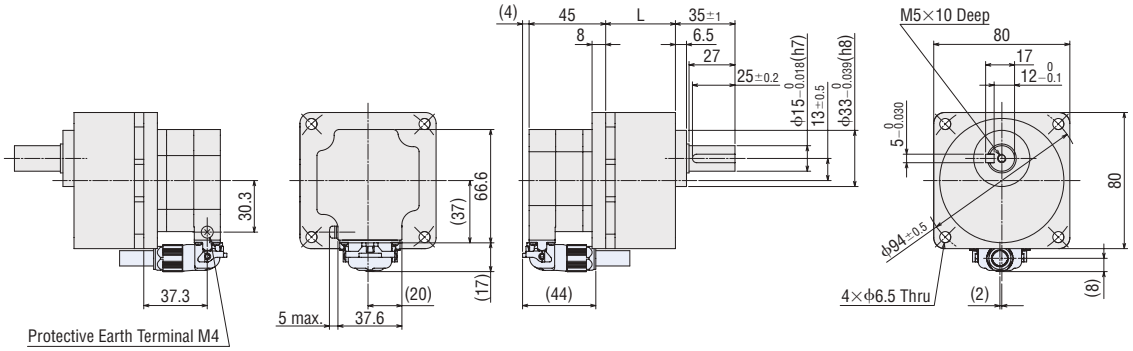


●At the time of shipment, the parallel key is fixed in the key slot of the gearhead shaft.

### •When connecting the connection cable drawing from the counter-output shaft side

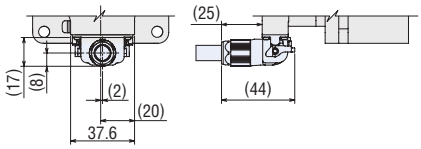


## ◇Round Shaft Type・60 W

**BLM260HP-AS**

Mass: 0.52 kg

2D CAD A1477 3D CAD

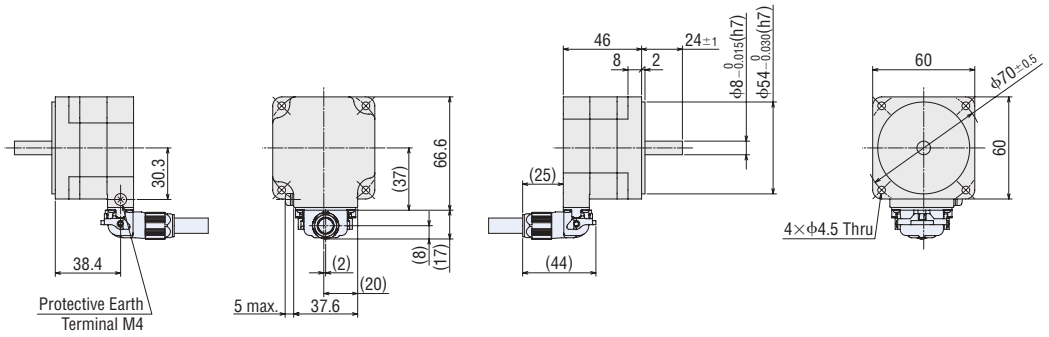

## ◇Parallel Shaft Gearhead **GFV** Gear・120 W

2D & 3D CAD

| Product Name | Motor Product Name | Gearhead Product Name | Gear Ratio | L | Mass kg | 2D CAD | |
|---|---|---|---|---|---|---|---|
| | | | | | | Connection cable drawing from the output shaft side is connected | Connection cable drawing from the counter-output shaft side is connected |
| **BLM5120HP-□S**<br>**BLM5120HP-□SF** | BLM5120HP-GFV | GFV5G□S<br>GFV5G□SF | **5**～**20** | 45 | 2.1 | A1469A | A1470A |
| | | | **30**～**100** | 58 | 2.4 | A1469B | A1470B |
| | | | **200** | 64 | 2.5 | A1469C | A1470C |

### •When connecting the connection cable drawing from the output shaft side

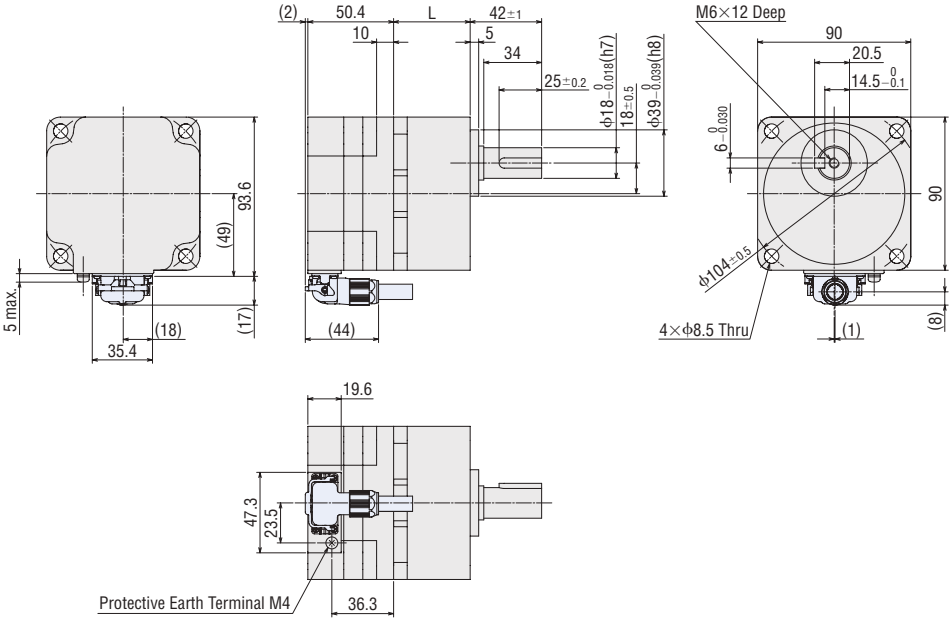


●At the time of shipment, the parallel key is fixed in the key slot of the gearhead shaft.

### •When connecting the connection cable drawing from the counter-output shaft side

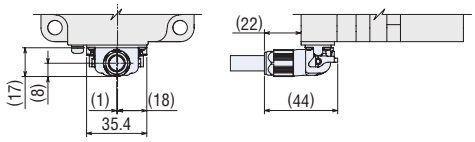


## ◇Round Shaft Type・120 W

**BLM5120HP-AS**

Mass: 1.1 kg

2D CAD A1479 3D CAD

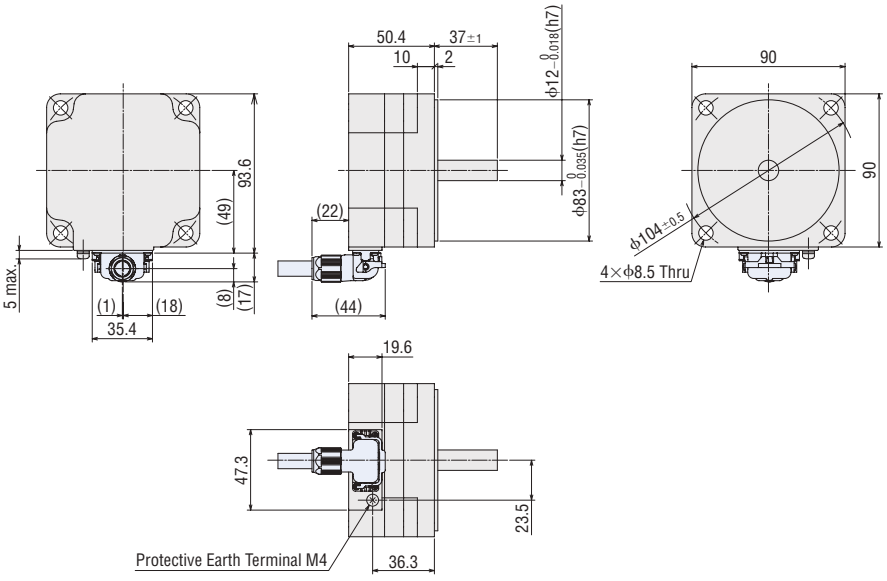

## ◇Parallel Shaft Gearhead **GFV** Gear・200 W

2D & 3D CAD

| Product Name | Motor Product Name | Gearhead Product Name | Gear Ratio | L | Mass kg | 2D CAD | |
|---|---|---|---|---|---|---|---|
| | | | | | | Connection cable drawing from the output shaft side is connected | Connection cable drawing from the counter-output shaft side is connected |
| **BLM6200SHP-□S** | BLM6200SHP-GFV | GFV6G□S | **5**～**20** | 60 | 4.7 | A1471A | A1472A |
| | | | **30**, **50** | 72 | | A1471B | A1472B |
| | | | **100**, **200** | 86 | | A1471C | A1472C |

### •When connecting the connection cable drawing from the output shaft side

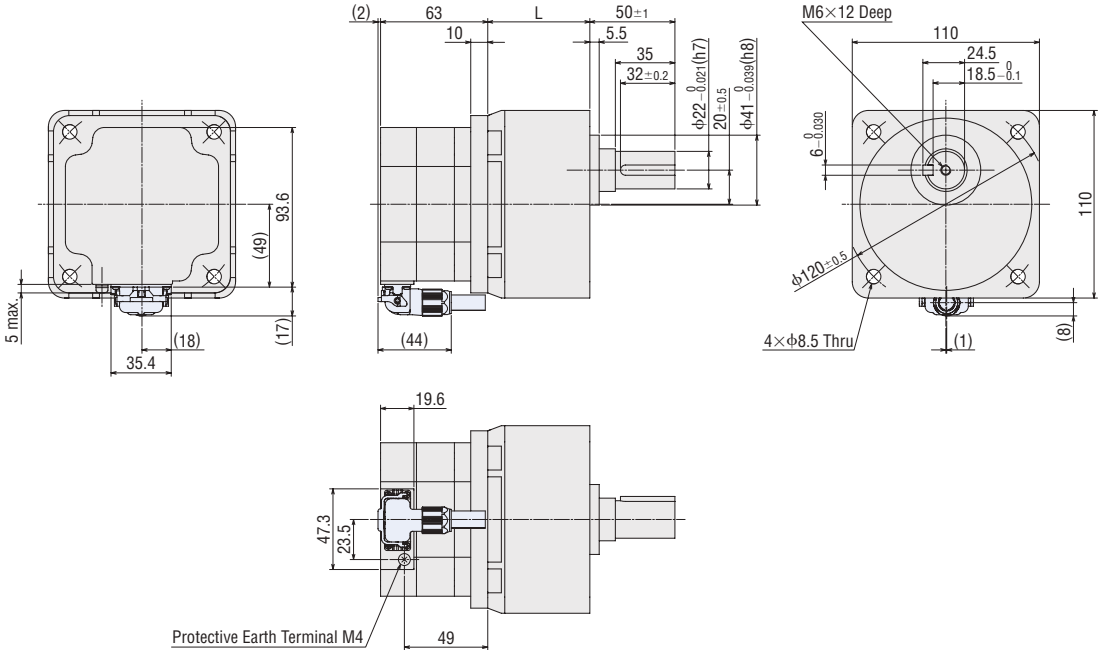


●At the time of shipment, the parallel key is fixed in the key slot of the gearhead shaft.

### •When connecting the connection cable drawing from the counter-output shaft side

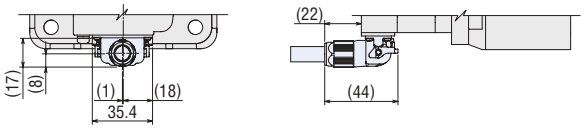


## ◇Round Shaft Type・200 W

**BLM5200HP-AS**

Mass: 1.6 kg

2D CAD A1481 3D CAD

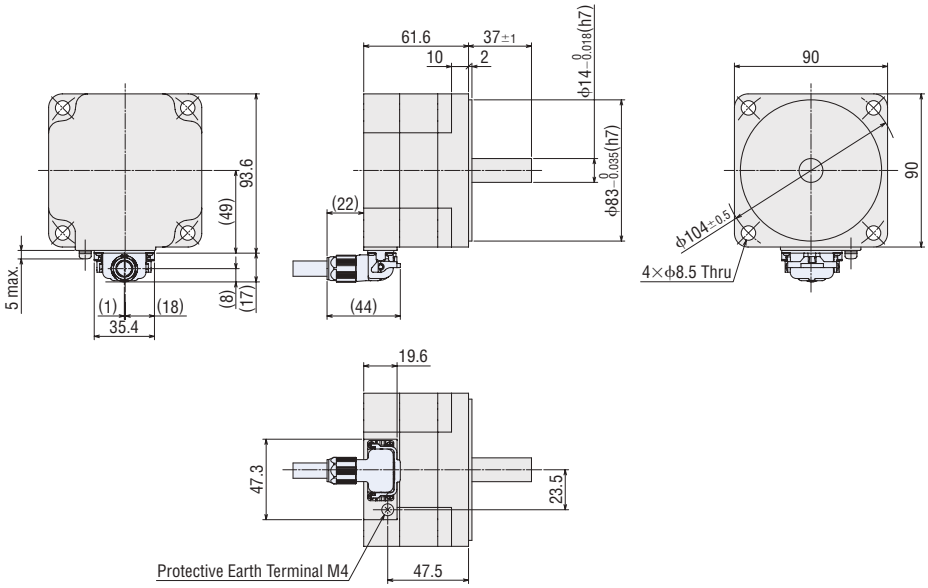

## ◇Parallel Shaft Gearhead **GFV** Gear・400 W

2D & 3D CAD

| Product Name | Motor Product Name | Gearhead Product Name | Gear Ratio | L | Mass kg | 2D CAD | |
|---|---|---|---|---|---|---|---|
| | | | | | | Connection cable drawing from the output shaft side is connected | Connection cable drawing from the counter-output shaft side is connected |
| **BLM6400SHP-□S** | BLM6400SHP-GFV | GFV6G□S | **5**~**20** | 60 | 5.2 | A1473A | A1474A |
| | | | **30**, **50** | 72 | | A1473B | A1474B |

### •When connecting the connection cable drawing from the output shaft side

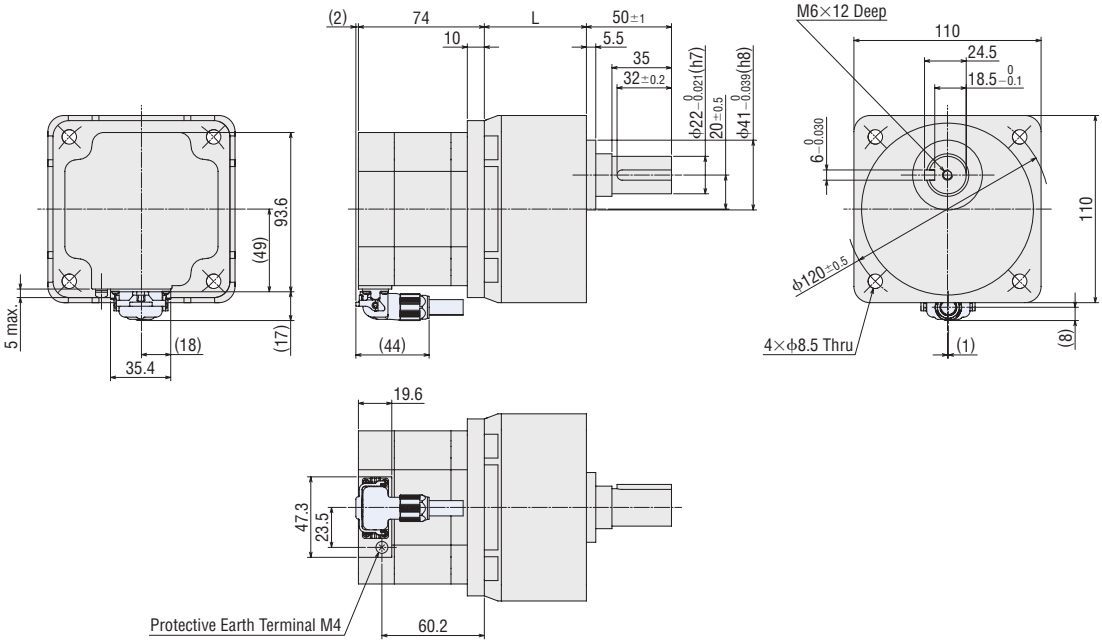


●At the time of shipment, the parallel key is fixed in the key slot of the gearhead shaft.

### •When connecting the connection cable drawing from the counter-output shaft side

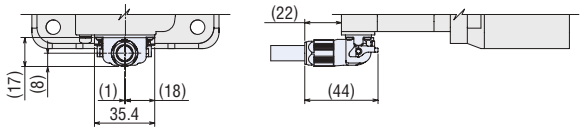


## ◇Round Shaft Type・400 W

**BLM5400HP-AS**

Mass: 2.1 kg

2D CAD A1483 3D CAD

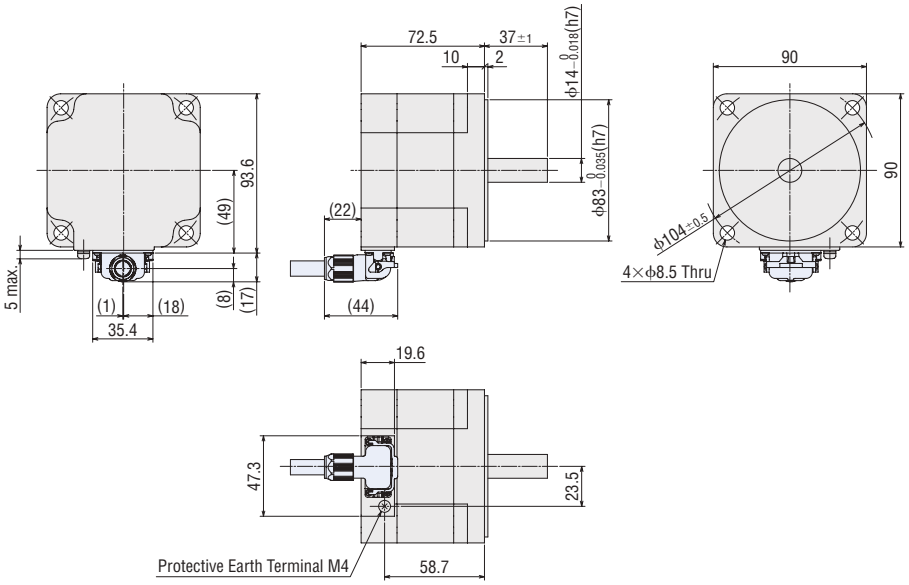

## ◇Parallel Shaft Gearhead **JV** Gear・400 W

2D & 3D CAD

| Product Name | Motor Product Name | Gearhead Product Name | Gear Ratio | Mass kg | 2D CAD | |
|---|---|---|---|---|---|---|
| | | | | | Connection cable drawing from the output shaft side is connected | Connection cable drawing from the counter-output shaft side is connected |
| **BLM5400HPK-5DV□S** | BLM5400HPK | 5DV□S | **100, 200** | 8.6 | A1559 | A1560 |

•When connecting the connection cable drawing from the output shaft side

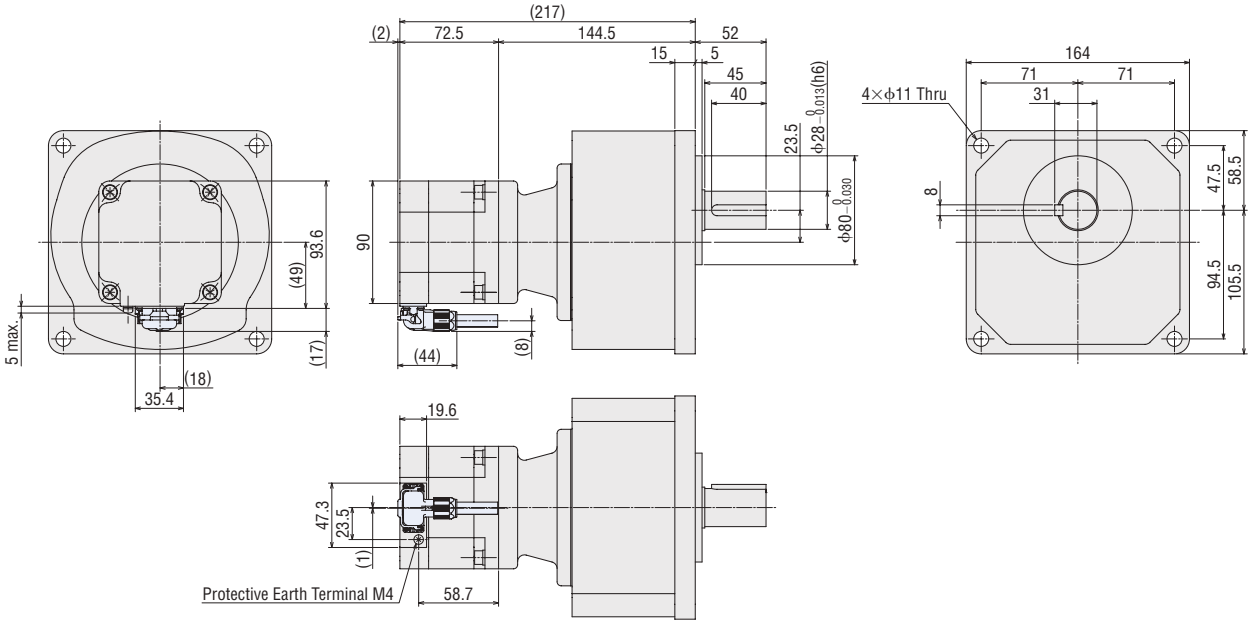


•When connecting the connection cable drawing from the counter-output shaft side

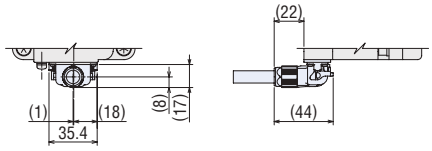

## ◇Parallel Shaft Gearhead **JV** Gear・200 W, 400 W

2D & 3D CAD

| Product Name | Motor Product Name | Gearhead Product Name | Gear Ratio | Dimensions | | | Mass kg | 2D CAD | |
|---|---|---|---|---|---|---|---|---|---|
| | | | | A | L | B | | Connection cable drawing from the output shaft side is connected | Connection cable drawing from the counter-output shaft side is connected |
| **BLM5200HPK-5KV□S** | BLM5200HPK | 5KV□S | **300**, **450** | (290.1) | 61.6 | 47.5 | 12.1 | A1557 | A1558 |
| **BLM5400HPK-5KV□S** | BLM5400HPK | 5KV□S | **300**, **450** | (301) | 72.5 | 58.7 | 12.6 | A1561 | A1562 |

•When connecting the connection cable drawing from the output shaft side

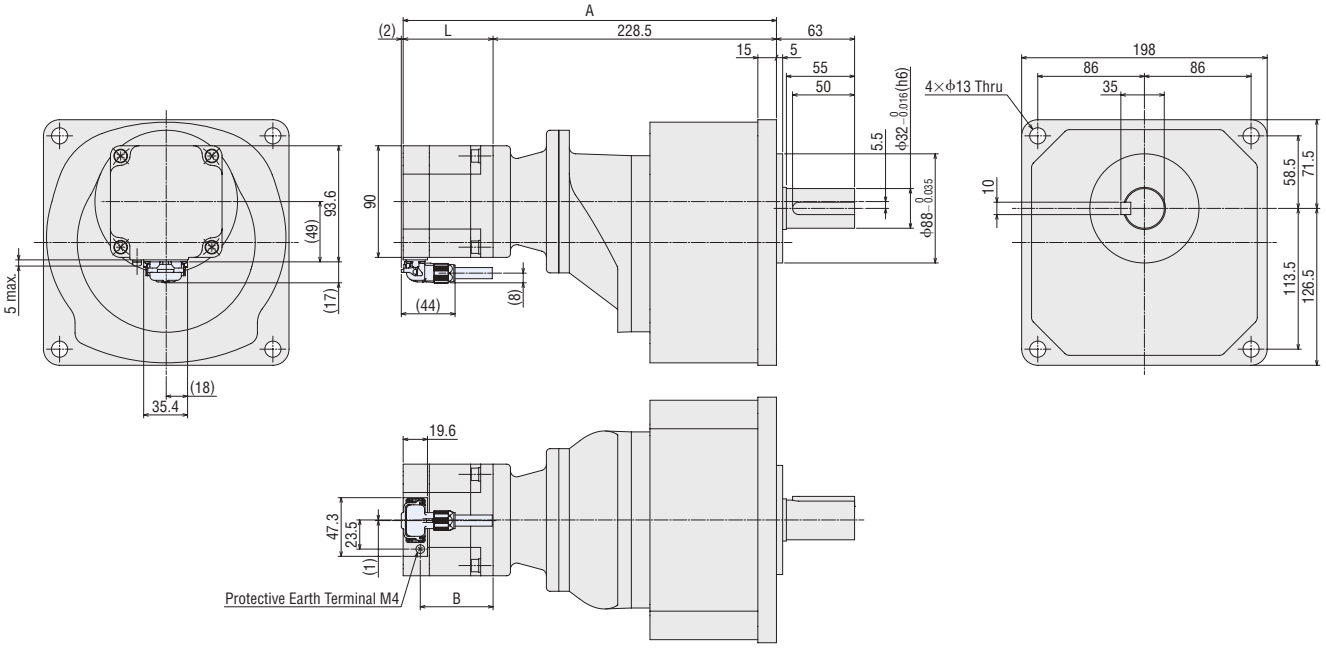


•When connecting the connection cable drawing from the counter-output shaft side

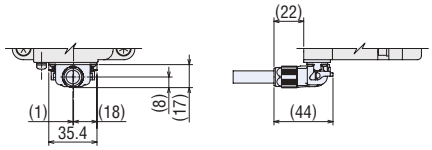

## ◇Legged Gearhead **JB** Gear • 200 W, 400 W

2D & 3D CAD

| Product Name | Motor Product Name | Gearhead Product Name | Gear Ratio | Dimensions No. | L | S | Mass kg | 2D CAD | |
|---|---|---|---|---|---|---|---|---|---|
| | | | | | | | | Connection cable drawing from the output shaft side is connected | Connection cable drawing from the counter-output shaft side is connected |
| **BLM5200HPK-5■B□B-L** | BLM5200HPK | 5■B□B | **5, 10, 20** | ① | 61.6 | 47.5 | 4.6 | A1537 | A1538 |
| | | | **30, 50** | ③ | | | 5.6 | A1539 | A1540 |
| | | | **100, 200** | ⑤ | | | 7.6 | A1541 | A1542 |
| | | | **300, 450** | ⑦ | | | 11.6 | A1543 | A1544 |
| | | | **600, 1200** | ⑨ | | | 18.1 | A1545 | A1546 |
| **BLM5400HPK-5■B□B-L** | BLM5400HPK | 5■B□B | **5, 10, 20** | ② | 72.5 | 58.7 | 5.1 | A1547 | A1548 |
| | | | **30, 50** | ④ | | | 6.1 | A1549 | A1550 |
| | | | **100, 200** | ⑥ | | | 8.1 | A1551 | A1552 |
| | | | **300, 450** | ⑧ | | | 12.1 | A1553 | A1554 |
| | | | **600** | ⑩ | | | 18.6 | A1555 | A1556 |

| Dimensions No. | Total Length | Gearhead Dimensions | | | | | | | | | | Output Shaft Dimensions | | | | | | Output Shaft Tapping Size T |
|---|---|---|---|---|---|---|---|---|---|---|---|---|---|---|---|---|---|---|
| | A | B | C | D | E | F | G | H | I | J | K | M | N | O | P | Q | R | |
| ① | (219.1) | 157.5 | 85±0.2 | 131 | 110 | 134 | φ9 | 40 | 45 | 64 | 10 | $\phi 18^{\ 0}_{-0.011}$(h6) | 16.5* | 30 | 27 | 20.5 | 6 | M6 15 Deep |
| ② | (230) | | | | | | | | | | | | | | | | | |
| ③ | (245.1) | 183.5 | 90±0.2 | 139 | 130 | 154 | φ11 | 65 | 55 | 90 | 12 | $\phi 22^{\ 0}_{-0.013}$(h6) | 19* | 40 | 35 | 24.5 | 6 | M8 20 Deep |
| ④ | (256) | | | | | | | | | | | | | | | | | |
| ⑤ | (258.1) | 196.5 | 110±0.2 | 167 | 140 | 175 | φ11 | 90 | 65 | 125 | 15 | $\phi 28^{\ 0}_{-0.013}$(h6) | 23.5* | 45 | 40 | 31 | 8 | |
| ⑥ | (269) | | | | | | | | | | | | | | | | | |
| ⑦ | (353.1) | 291.5 | 130±0.2 | 198 | 170 | 208 | φ13 | 130 | 70 | 168 | 18 | $\phi 32^{\ 0}_{-0.016}$(h6) | 5.5 | 55 | 50 | 35 | 10 | M10 25 Deep |
| ⑧ | (364) | | | | | | | | | | | | | | | | | |
| ⑨ | (375.1) | 313.5 | 150±0.2 | 230 | 210 | 254 | φ15 | 150 | 90 | 196 | 20 | $\phi 40^{\ 0}_{-0.016}$(h6) | 0 | 65 | 60 | 43 | 12 | |
| ⑩ | (386) | | | | | | | | | | | | | | | | | |

*The center position of the gearhead output shaft is offset in an upper position than the motor's center position.

### •When connecting the connection cable drawing from the output shaft side

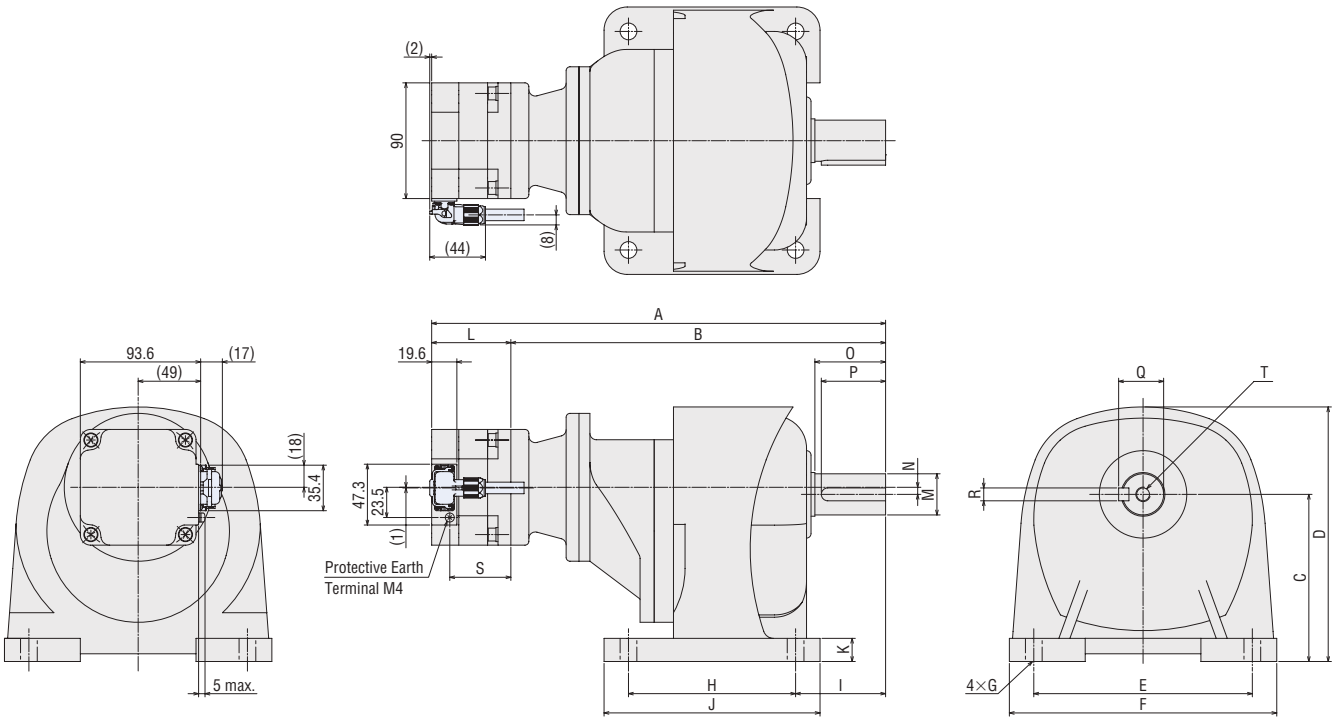


### •When connecting the connection cable drawing from the counter-output shaft side

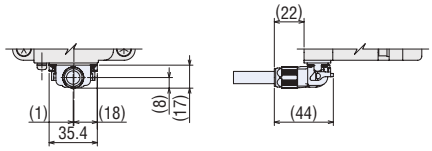

## ◇Hypoid Right-Angle Hollow Shaft **JH** Gear・60 W

2D & 3D CAD

| Product Name | Motor Product Name | Gearhead Product Name | Mass kg | 2D CAD | |
|---|---|---|---|---|---|
| | | | | Connection cable drawing from the output shaft side is connected | Connection cable drawing from the counter-output shaft side is connected |
| **BLM460SHPK-4H□S** | BLM460SHPK | 4H□S | 2.6 | A1604 | A1605 |

•When connecting the connection cable drawing from the output shaft side

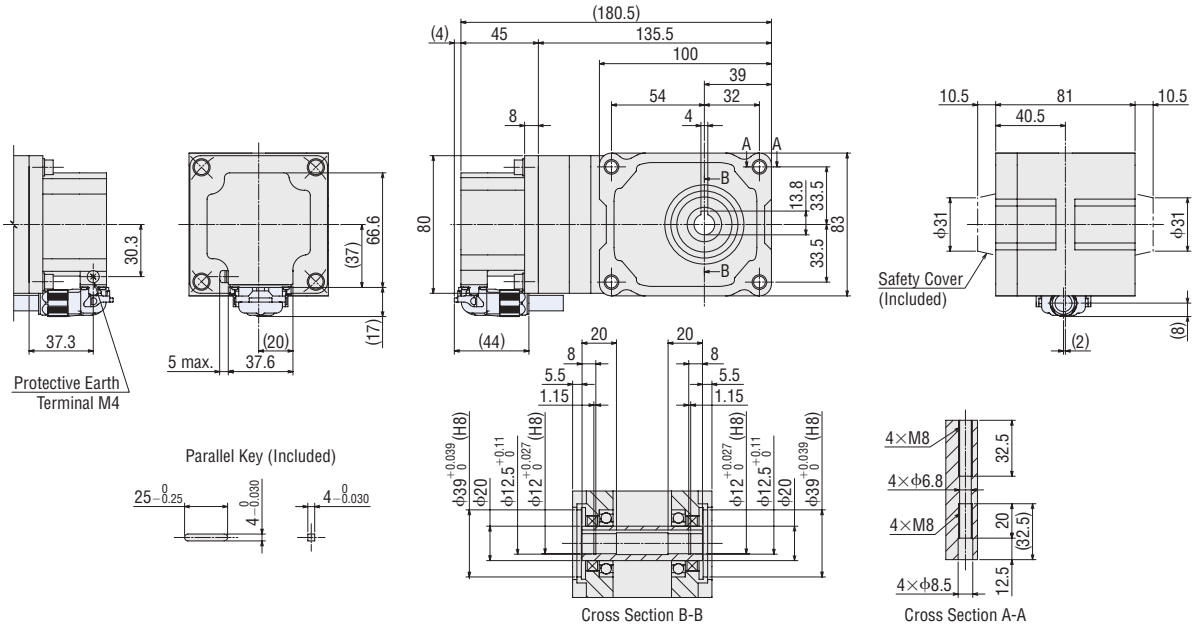


•When connecting the connection cable drawing from the counter-output shaft side

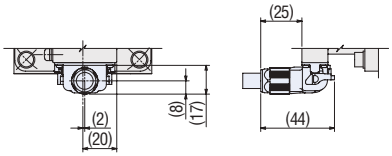

## ◇Hypoid Right-Angle Hollow Shaft **JH** Gear • 120 W

2D & 3D CAD

| Product Name | Motor Product Name | Gearhead Product Name | Mass kg | 2D CAD | |
|---|---|---|---|---|---|
| | | | | Connection cable drawing from the output shaft side is connected | Connection cable drawing from the counter-output shaft side is connected |
| **BLM5120HPK-5H□S** | BLM5120HPK | 5H□S | 4.1 | A1535 | A1536 |

**•When connecting the connection cable drawing from the output shaft side**

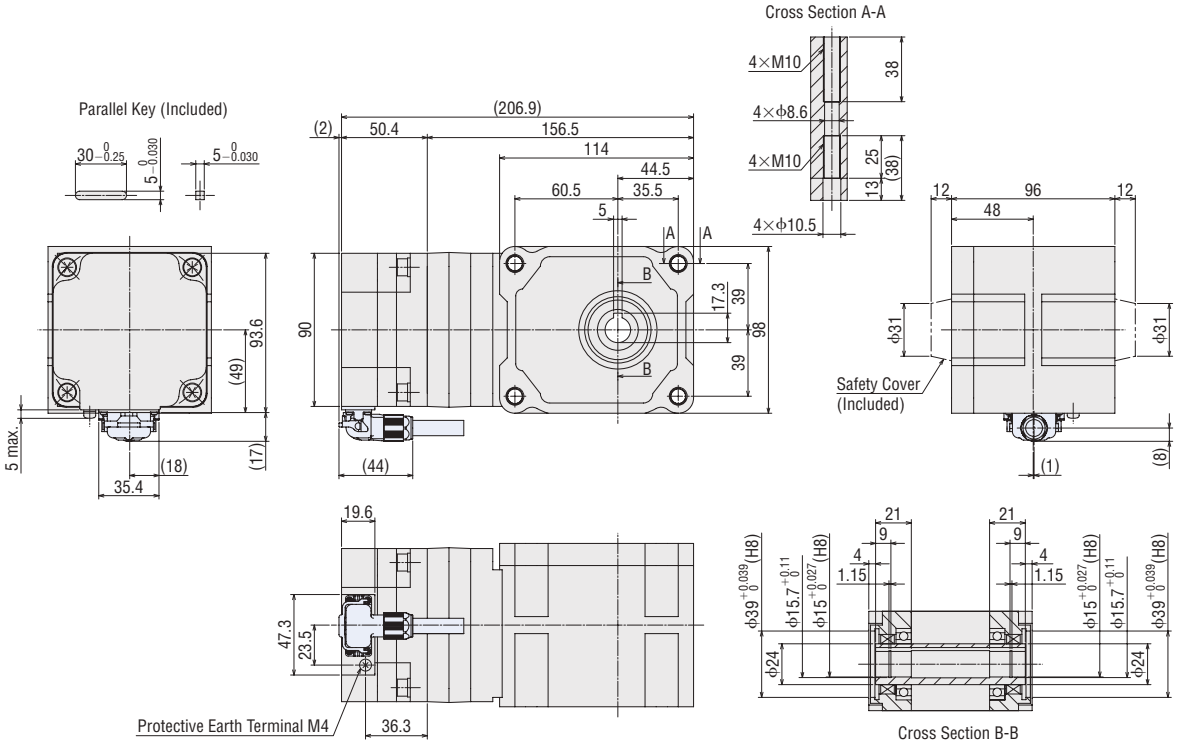


**•When connecting the connection cable drawing from the counter-output shaft side**

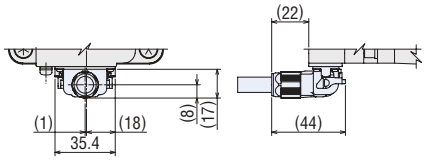

## ◇Hypoid Right-Angle Hollow Shaft **JH** Gear • 200 W, 400 W

2D & 3D CAD

| Product Name | Motor Product Name | Gearhead Product Name | Gear Ratio | Dimensions | | | Mass kg | 2D CAD | |
|---|---|---|---|---|---|---|---|---|---|
| | | | | C | L | D | | Connection cable drawing from the output shaft side is connected | Connection cable drawing from the counter-output shaft side is connected |
| **BLM5200HPK-5XH□S** | BLM5200HPK | 5XH□S | **5**, **10**, **15** **20**, **30**, **50** | (267.1) | 61.6 | 47.5 | 6.6 | A1565 | A1566 |
| **BLM5400HPK-5XH□S** | BLM5400HPK | 5XH□S | **5**, **10**, **15** **20**, **30**, **50** | (278) | 72.5 | 58.7 | 7.1 | A1569 | A1570 |

•When connecting the connection cable drawing from the output shaft side

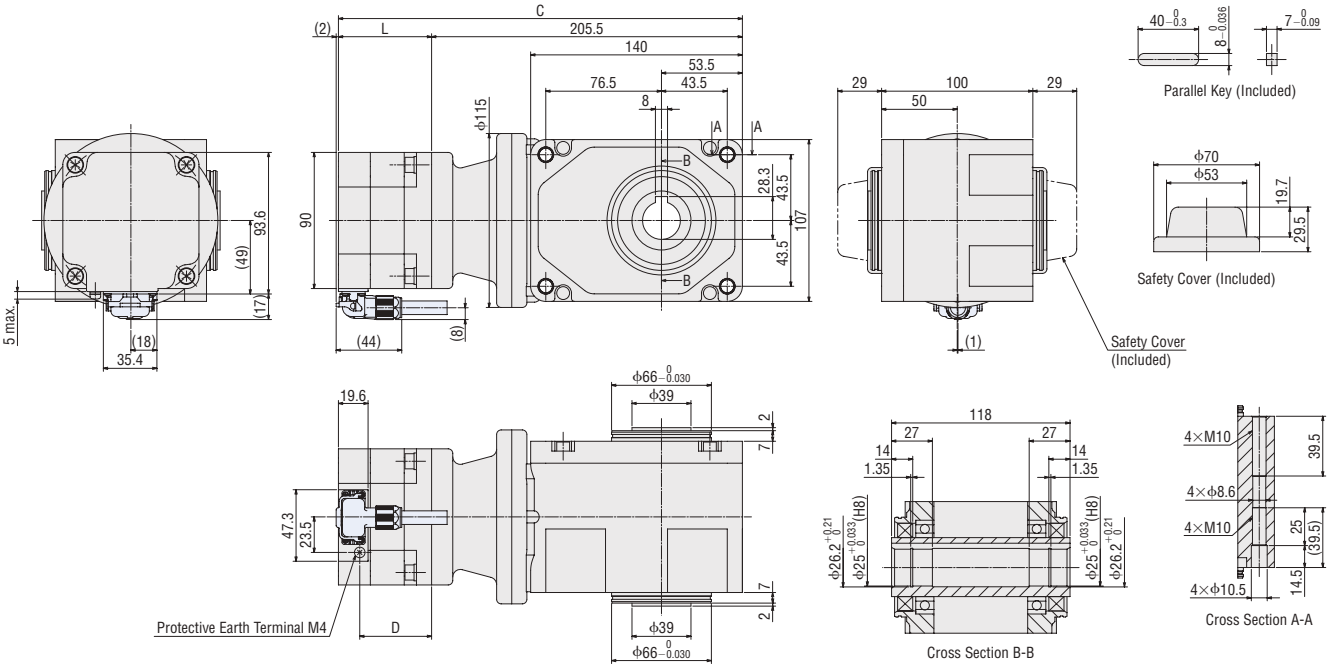


•When connecting the connection cable drawing from the counter-output shaft side

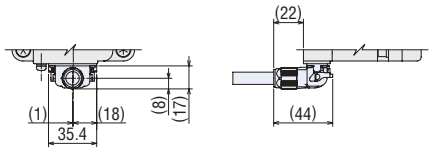

## ◇Hypoid Right-Angle Hollow Shaft **JH** Gear • 200 W, 400 W

2D & 3D CAD

| Product Name | Motor Product Name | Gearhead Product Name | Gear Ratio | Dimensions | | | Mass kg | 2D CAD | |
|---|---|---|---|---|---|---|---|---|---|
| | | | | C | L | D | | Connection cable drawing from the output shaft side is connected | Connection cable drawing from the counter-output shaft side is connected |
| **BLM5200HPK-5YH□S** | BLM5200HPK | 5YH□S | **100**, **200** | (306.6) | 61.6 | 47.5 | 8.1 | A1567 | A1568 |
| **BLM5400HPK-5YH□S** | BLM5400HPK | 5YH□S | **100**, **200** | (317.5) | 72.5 | 58.7 | 8.6 | A1571 | A1572 |

• When connecting the connection cable drawing from the output shaft side

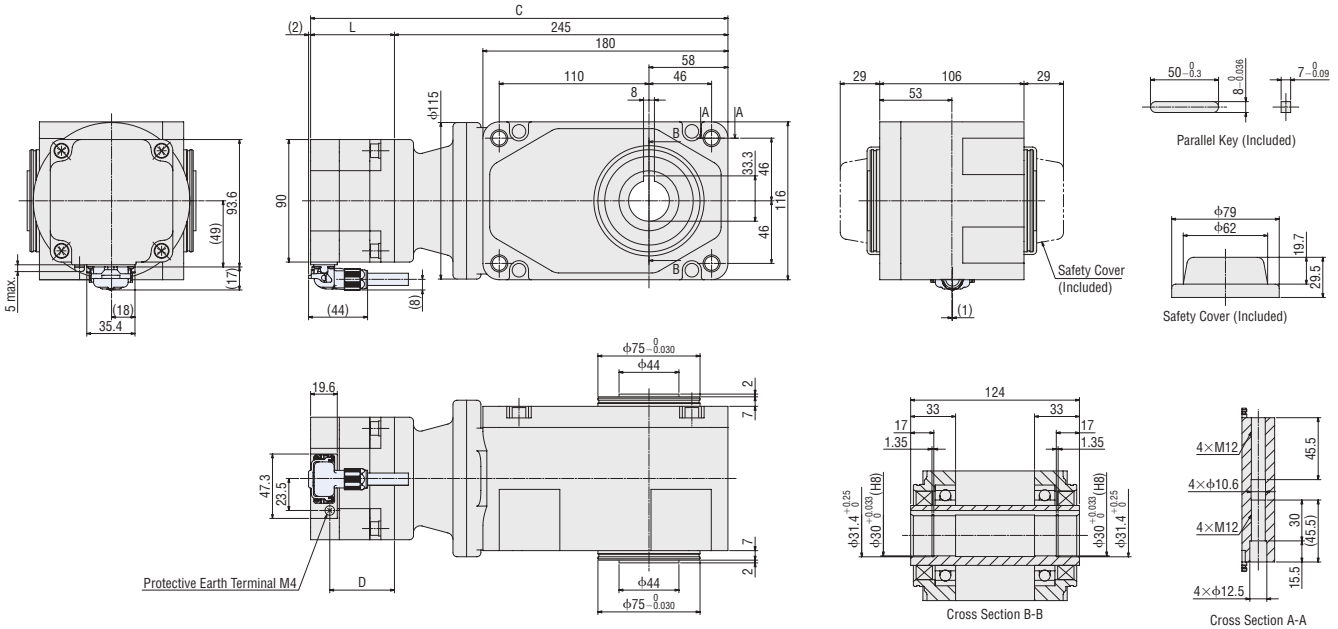


• When connecting the connection cable drawing from the counter-output shaft side

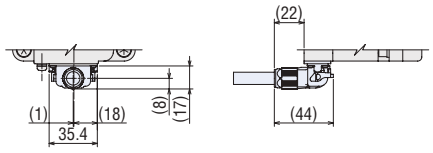

## Drivers (Common among cable and connector types)

### ◇30 W, 60 W, 120 W

**BMUD30-A2**, **BMUD30-C2**, **BMUD60-A2**, **BMUD60-C2**, **BMUD120-A2**, **BMUD120-C2**

Mass: 0.4 kg

2D CAD A1359 3D CAD

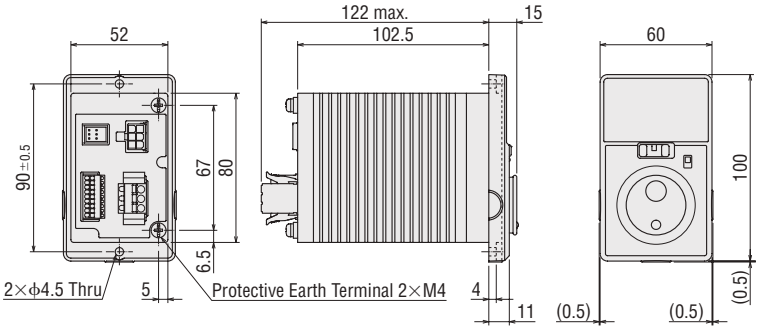


• Driver Panel Cut-out Diagram

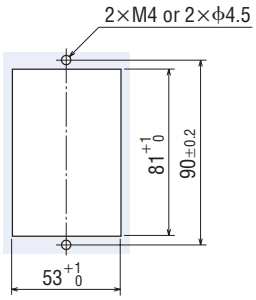


### ◇200 W, 400 W

**BMUD200-A**, **BMUD200-C**, **BMUD400-S**

Mass: 0.8 kg

2D CAD A1343 3D CAD

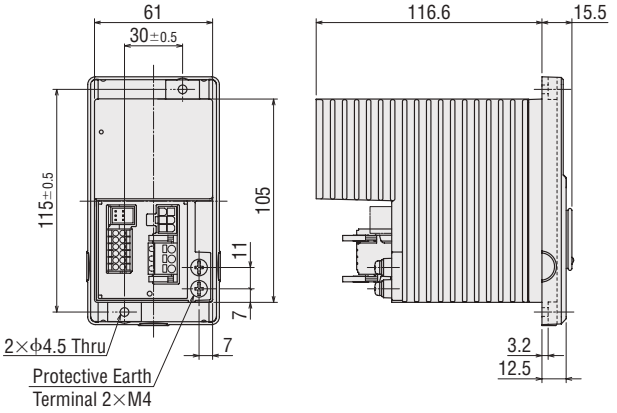


• Driver Panel Cut-out Diagram

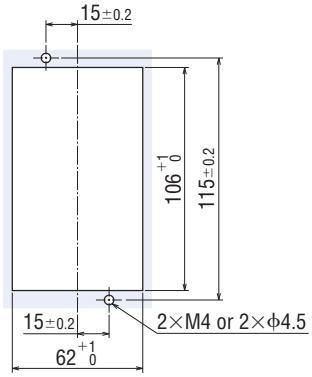


## Connection Cables (For cable type)

| Product Name | Length L (m) |
|---|---|
| **CC01BL2** | 1 |
| **CC02BL2** | 2 |
| **CC03BL2** | 3 |
| **CC05BL2** | 5 |
| **CC07BL2** | 7 |
| **CC10BL2** | 10 |

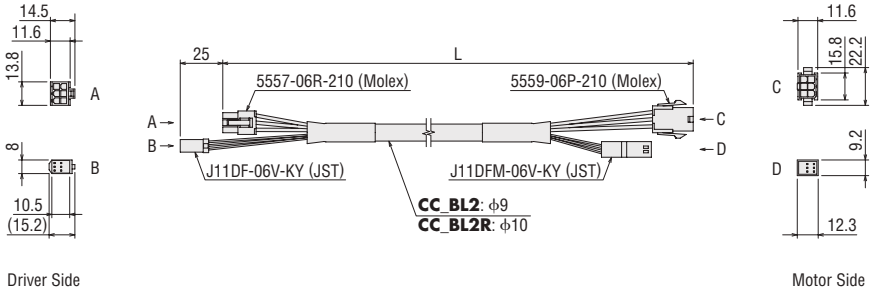


## Flexible Connection Cables (For cable type)

| Product Name | Length L (m) |
|---|---|
| **CC01BL2R** | 1 |
| **CC02BL2R** | 2 |
| **CC03BL2R** | 3 |
| **CC05BL2R** | 5 |
| **CC07BL2R** | 7 |
| **CC10BL2R** | 10 |

## Connection Cables (For connector type)

| Length L (m) | Product Name | | Mass (kg) |
|---|---|---|---|
| | Drawing on the output shaft side | Drawing on the counter-output shaft side | |
| 0.5 | **CC005HBLF** | **CC005HBLB** | 0.08 |
| 1 | **CC010HBLF** | **CC010HBLB** | 0.12 |
| 1.5 | **CC015HBLF** | **CC015HBLB** | 0.2 |
| 2 | **CC020HBLF** | **CC020HBLB** | 0.25 |
| 2.5 | **CC025HBLF** | **CC025HBLB** | 0.32 |
| 3 | **CC030HBLF** | **CC030HBLB** | 0.38 |
| 4 | **CC040HBLF** | **CC040HBLB** | 0.49 |
| 5 | **CC050HBLF** | **CC050HBLB** | 0.62 |
| 7 | **CC070HBLF** | **CC070HBLB** | 0.86 |
| 10 | **CC100HBLF** | **CC100HBLB** | 1.2 |

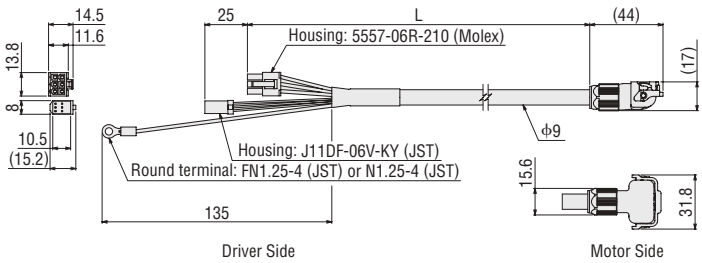

# Dimensions of Installation Screws

L2 represents the length when the plain washer and the spring washer are installed on the screw head.

## Parallel Shaft Gearhead

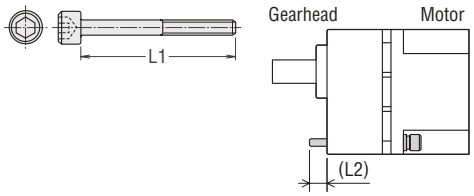


| Product Name | Gear Ratio | Installation Screws | | L2 (mm) |
|---|---|---|---|---|
| | | Screw Size | L1 (mm) | |
| GFV2G□<br>GFV2G□S(F) | 5~20 | M4 | 50 | 6 |
| | 30~100 | | 55 | 7 |
| | 200 | | 60 | 7 |
| GFV4G□<br>GFV4G□S(F) | 5~20 | M6 | 60 | 8 |
| | 30~100 | | 65 | 8 |
| | 200 | | 70 | 8 |
| GFV5G□<br>GFV5G□S(F) | 5~20 | M8 | 70 | 11.5 |
| | 30~100 | | 85 | 13.5 |
| | 200 | | 90 | 12.5 |
| GFV6G□<br>GFV6G□S | 5~20 | M8 | 85 | 11 |
| | 30, 50 | | 100 | 14 |
| | 100, 200 | | 110 | 10 |

● Installation screw: Includes 4 plain washers and 4 spring washers each.
The installation screw material is stainless steel.

## Hypoid Right-Angle Hollow Shaft

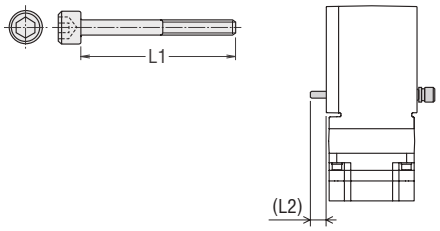


| Product Name | Gear Ratio | Installation Screws | | L2 (mm) |
|---|---|---|---|---|
| | | Screw Size | L1 (mm) | |
| 4H□S | 10~200 | M6 | 95 | 11 |
| 5H□S | 10~200 | M8 | 110 | 10 |
| 5XH□S | 5~50 | M8 | 120 | 16 |
| 5YH□S | 100, 200 | M10 | 130 | 19.5 |

● Installation screw: Includes 4 plain washers and 4 spring washers each.
The installation screw material is stainless steel.

● A number in the box □ in the product name indicates the gear ratio.

# Connection and Operation (30 W, 60 W, 120 W)

## Names and Functions of Driver Parts

Front side of the driver

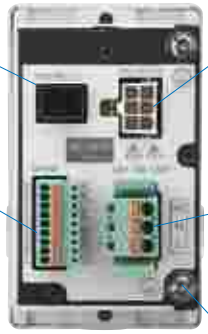


Back side of the driver

### ◇When Front Panel is Removed

## Extended Functions

Remove the front panel to be able to perform various settings by operating the keys.

| Operating Mode | Details |
|---|---|
| Monitoring | Rotation speed, load factor, operating data No., alarm, warning, I/O monitor |
| Data | Data 4 points<br>Rotation speed, acceleration time, deceleration time, reset |
| Parameters | Gear ratio, speed increasing ratio, initial panel indication, initial operation inhibition alarm, prohibition alarm of operation at the initial setting release method selection, analog acceleration/deceleration, upper and lower limits of speed setting function, easy holding function, external operating signal input, input function selection, output function selection, overload alarm detection time except during axial lock, overload warning level, speed attainment width, parameter mode reset |

### ◇Main Power Connector (CN1)

Connects to the main power supply. Connect a power supply that matches with the power supply voltage to be used.

- Single-Phase 100-120 VAC
- Single-Phase 200-240 VAC
- Three-Phase 200-240 VAC
- Applicable Lead Wire Size

AWG18~14 (0.75~2.0 mm²)

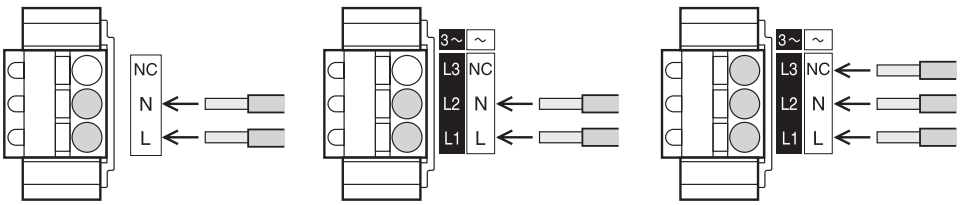


## Operation with the Driver only

### ◇Run/Stop

When the operating switch is set to the "RUN" position, the motor will start.
When it is returned to the "STAND-BY" position, the motor decelerates to a stop.

### ◇Speed Setting Method

Set the motor speed by using the dial.

Turning the dial slowly to the right increases the speed by 1 r/min increments, while turning it to the left reduces the speed by 1 r/min increments.
Turning the dial fast produces a great variation in speed.
Pressing the dial sets the speed.

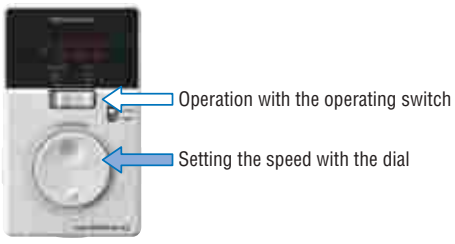


- Operating Switch

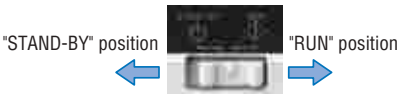

## Operation by External Signals

### ◇Operating Method

- Using the built-in power supply in the driver, the motor is operated through external signals (switched, relays, etc.).
  Connect Pins No. 5～8 of the I/O signal connector (CN4) as in the figure to the right.
- For operation using external signals, change the parameter setting in the "External Operating Signal Input". For details, see the user's guide.
- Multiple speed operation is available in up to 4 levels.

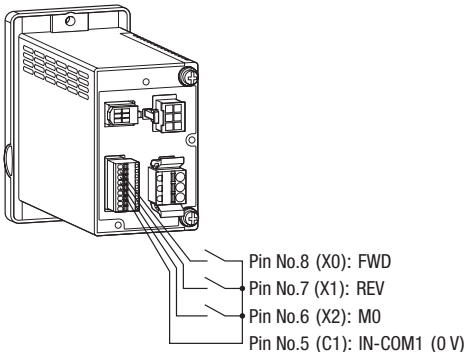


### •I/O Signals Connector (CN4)

| Pin No. | Terminal Name | Functions* | Description |
|---|---|---|---|
| 9 | C0 | Input signal common (for external power supply) | Connect for external power supplies. |
| 8 | X0 | [FWD] | During "ON", the motor rotates in the FWD direction. |
| 7 | X1 | [REV] | During "ON", the motor rotates in the REV direction. |
| 6 | X2 | [M0] | Select the operating data. |
| 5 | C1 | 0V (for internal power supply) | Connect for internal power supply. |
| 4 | Y0+ | [SPEED-OUT] | For every rotation of the motor output shaft, 30 pulses are output. |
| 3 | Y0− | | |
| 2 | Y1+ | [ALARM-OUT1] | It turns OFF when an alarm is generated. (Normally closed) |
| 1 | Y1− | | |

*The [ ] indicates the functions assigned in the factory.
Among the following signals, the signals required for the 3 input signal terminals (X0～X2) and the 2 output signal terminals (Y0, Y1) can be assigned.
3 points for the 7 input signal points (FWD, REV, M0, M1, ALARM-RESET, EXT-ERROR, H-FREE)
2 points for the 6 input signal points (ALARM-OUT1, SPEED-OUT, ALARM-OUT2, MOVE, VA, WNG)

### •Applicable Lead Wire Size

AWG26～20 (0.14～0.5 mm$^2$)

### ◇Connection Diagram

The diagrams are for a Single-Phase 100-120 VAC. I/O signals specified in [ ] are factory set signals.

#### •When using the built-in power supply

The figure shows a connection example for the operation of the motor using switches having contacts, such as switches or relays.

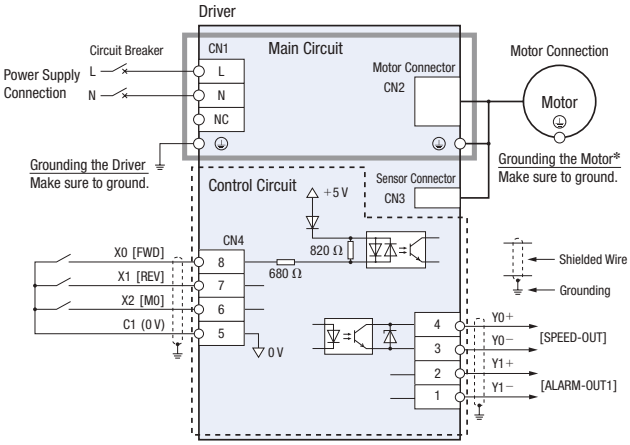


#### •When using external power supply

The figure shows a connection example when the motor is operated in a sequential connection with transistors.

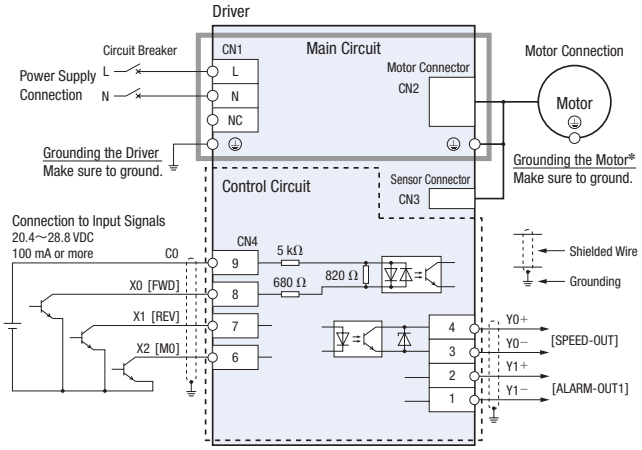


*Grounding the motor
For the connector type: Motor cables may not satisfy the grounding resistance of the standard applied to the equipment depending on the type or the length.
To resolve this issue, make sure to install the motor close to the ground.
For the cable type: The motor cable does not have a protective earth wire. Make sure to ground using the protective earth terminal for the motor.

## ◇Timing Chart

This is a timing chart when the "External operating signal input" parameter is set to "ON" and the rotation direction switch to "FWD".

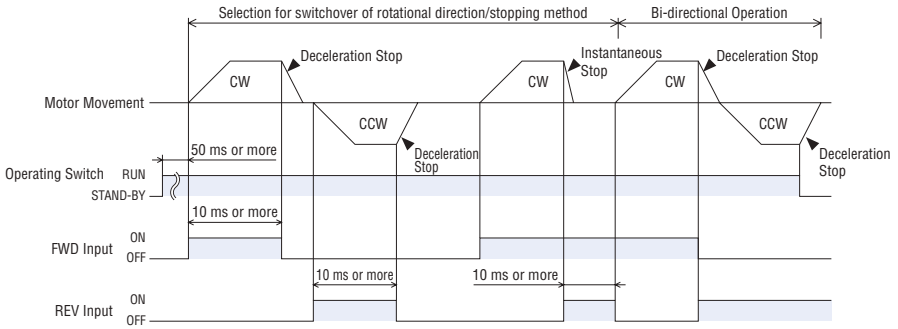


- Switching the FWD input to ON will cause the motor to turn clockwise as viewed from the motor shaft side, while switching the REV input to ON will cause the motor to turn counterclockwise. Turning it OFF decelerates the motor to a stop.
- If both the FWD input and REV input are turned ON simultaneously, the motor will stop instantaneously.

- The rotation direction varies depending on the gear ratio of the gearhead.

## ◇Example of Connection of I/O Signals with the Host Controller

This is a connection example for the operation of the motor using the host controller of the transistor output type.

### •Sink Logic

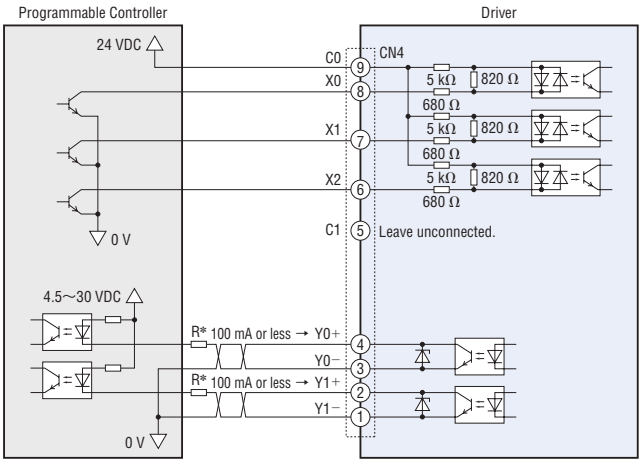


### •Source Logic

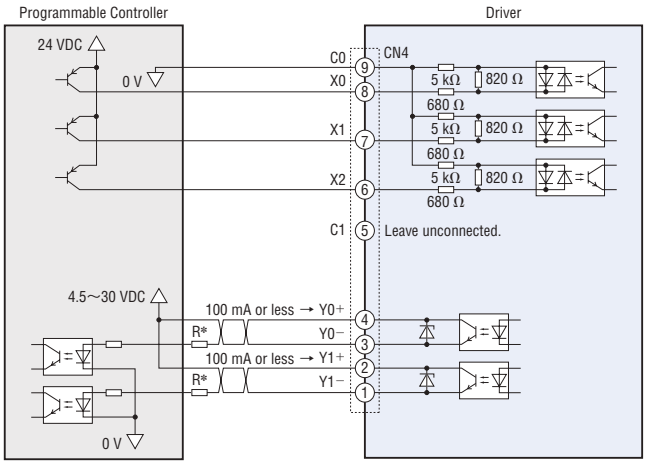


*Recommended resistance value
For 24 VDC: 680 Ω~2.7 kΩ (2 W)
For 5 VDC: 150 Ω~560 Ω (0.5 W)

**Note**

The current applied to Y0 and Y1 must be 100 mA or less. If this value is exceeded, connect the limiting resistance R.

## ◇When an External Control Equipment with a Built-in Clamp Diode is used

With external control equipment with built-in clamping diodes connected, if the power of the external control equipment is turned off with the driver turned on, the motor may rotate due to current flowing around. The motor may also rotate even if the driver and the external control equipment are simultaneously turned ON/OFF because these two devices have different current capacities.

To turn off the power, first turn off the driver and then the external control equipment.

To turn on the power, first turn on the external control equipment and then the driver.

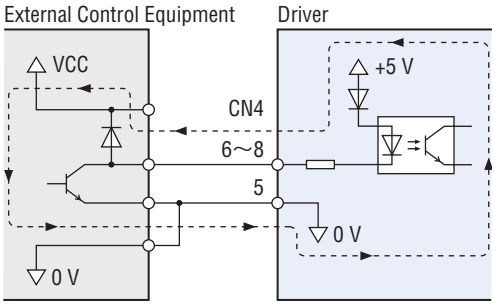


## ◇When using for the Multiple Speed Operation

By switching the ON/OFF of the M0 or M1 input, the multiple speed operation becomes available.

### •Example of operating conditions

| Operating Data No. | M0 | M1 | Speed [r/min] |
|---|---|---|---|
| 0 | OFF | OFF | 3000 |
| 1 | ON | OFF | 1000 |
| 2 | OFF | ON | 2000 |
| 3 | ON | ON | 500 |

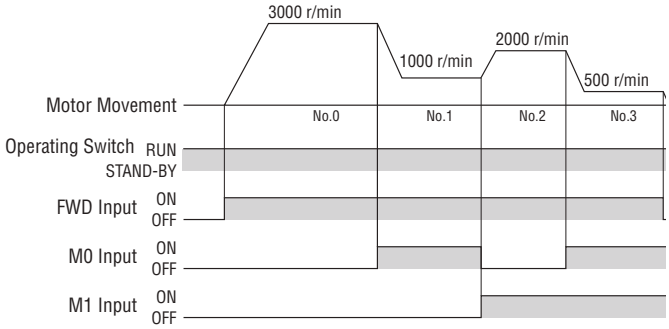

# Connection and Operation (200 W, 400 W)

## Names and Functions of Driver Parts

Front side of the driver

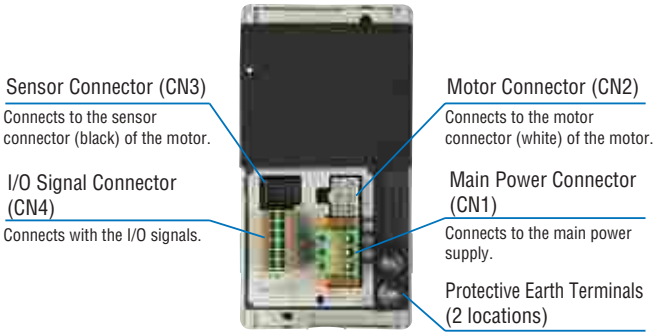


Back side of the driver

### When Front Panel is Removed

## Extended Functions

Remove the front panel to be able to perform various settings by operating the keys.

| Operating Mode | Details |
|---|---|
| Monitoring | Rotation speed, load factor, operation data No., alarm, warning, I/O monitor |
| Data | Data 4 points<br>Rotation speed, acceleration time, deceleration time, reset |
| Parameters | Gear ratio, speed increasing ratio, initial panel indication, initial operation inhibition alarm, prohibition alarm of operation at the initial setting release method selection, analog acceleration/deceleration, upper and lower limits of speed setting function, easy holding function, external operating signal input, input function selection, output function selection, overload alarm detection time except during axial lock, overload warning level, speed attainment width, parameter mode reset |

### Main Power Connector (CN1)

Connects to the main power supply. Connect a power supply that matches with the power supply voltage to be used.

- Single-Phase 100-120 VAC
- Single-Phase 200-240 VAC
- Three-Phase 200-240 VAC
- Applicable Lead Wire Size

AWG18～14 (0.75～2.0 mm$^2$)

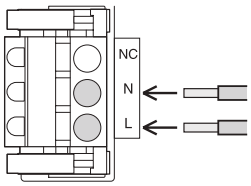


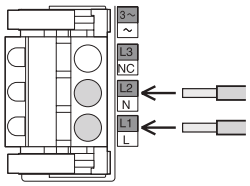


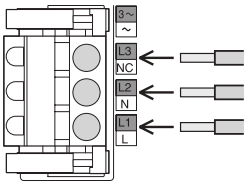


For the 400 W type, L1, L2 and L3 displays only.

## Operation with the Driver only

### Run/Stop

When the operating switch is set to the "RUN" position, the motor will start.
When it is returned to the "STAND-BY" position, the motor decelerates to a stop.

### Speed Setting Method

Set the motor speed by using the dial.

Turning the dial slowly to the right increases the speed by 1 r/min increments, while turning it to the left reduces the speed by 1 r/min increments.
Turning the dial fast produces a great variation in speed.
Pressing the dial sets the speed.

- Operating Switch

## Operation by External Signals

### ◇Operating Method

- Using the built-in power supply in the driver, the motor is operated through external signals (switched, relays, etc.).
  Connect Pins No. 1～5 and No. 7 of the I/O signal connector (CN4) as in the table below.
- For operation using external signals, change the parameter setting in the "External Operating Signal Input". For details, see the user's guide.
- Multiple speed operation is available in up to 4 levels.

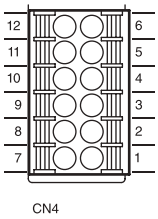


### •I/O Signals Connector (CN4)

| Pin No. | Signal Name | Functions✻ | Description |
|---|---|---|---|
| 1 | IN4 | [ALARM-RESET] | Alarms are reset. |
| 2 | IN3 | [M1] | Select the operating data. |
| 3 | IN2 | [M0] | |
| 4 | IN1 | [REV] | During "ON", the motor rotates in the REV direction. |
| 5 | IN0 | [FWD] | During "ON", the motor rotates in the FWD direction. |
| 6 | IN-COM0 | Input signal common (for external power supply) | Connect for external power supplies. |
| 7 | IN-COM1 | 0V (for internal power supply) | Connect for internal power supply. |
| 8 | N.C. | N.C. | Leave unconnected. |
| 9 | OUT1− | [ALARM-OUT1] | It turns OFF when an alarm is generated. (Normally closed) |
| 10 | OUT1+ | | |
| 11 | OUT0− | [SPEED-OUT] | For every rotation of the motor output shaft, 30 pulses are output. |
| 12 | OUT0+ | | |

### •Applicable Lead Wire Size

AWG24～18 (0.2～0.75 mm²)

✻The [ ] indicates the functions assigned in the factory.
Among the following signals, the signals required for the 5 input signal terminals (IN0～IN4) and the 2 output signal terminals (OUT0, OUT1) can be assigned.
5 points for the 7 input signal points (FWD, REV, M0, M1, ALARM-RESET, EXT-ERROR, H-FREE)
2 points for the 6 input signal points (ALARM-OUT1, SPEED-OUT, ALARM-OUT2, MOVE, VA, WNG)

### ◇Connection Diagram

The diagrams are for a Single-Phase 100-120 VAC. I/O signals specified in [ ] are factory set signals.

#### •When using the built-in power supply

The figure shows a connection example for the operation of the motor using switches having contacts, such as switches or relays.

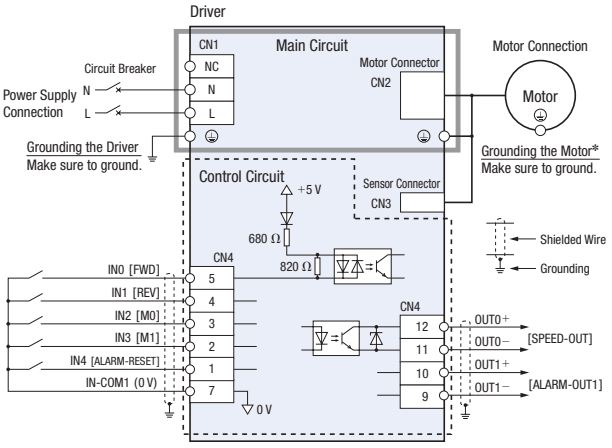


#### •When using external power supplies

The figure shows a connection example when the motor is operated in a sequential connection with transistors.

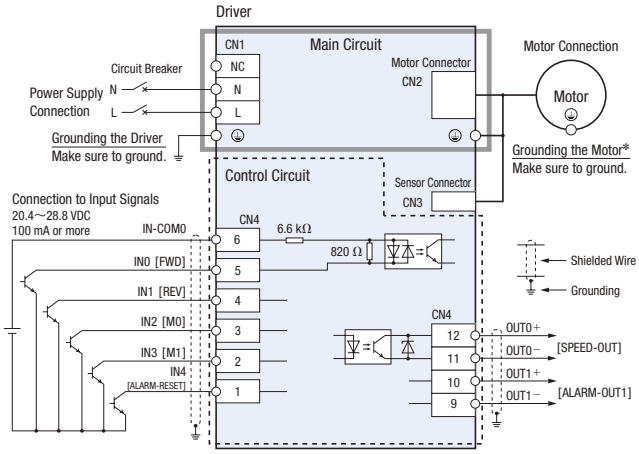


✻Grounding the motor

For the connector type: Motor cables may not satisfy the grounding resistance of the standard applied to the equipment depending on the type or the length.
To resolve this issue, make sure to install the motor close to the ground.

For the cable type: The motor cable does not have a protective earth wire. Make sure to ground using the protective earth terminal for the motor.

## ◇Timing Chart

This is a timing chart when the "External operating signal input" parameter is set to "ON" and the rotation direction switch to "FWD".

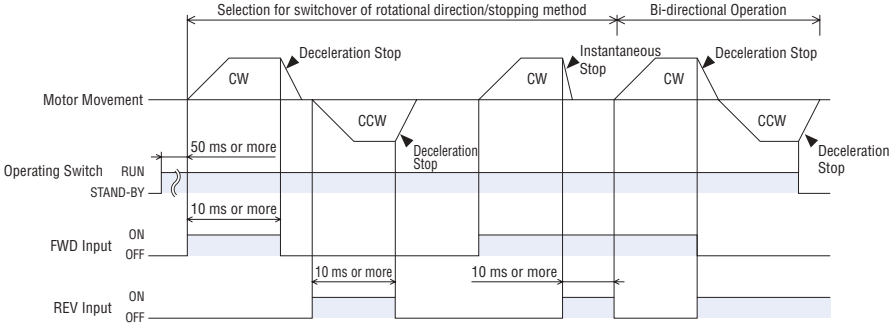


- Switching the FWD input to ON will cause the motor to turn clockwise as viewed from the motor shaft side, while switching the REV input to ON will cause the motor to turn counterclockwise. Turning it OFF decelerates the motor to a stop.
- If both the FWD input and REV input are turned ON simultaneously, the motor will stop instantaneously.
- The rotation direction varies depending on the gear ratio of the gearhead.

## ◇Example of Connection of I/O Signals with the Host Controller

This is a connection example for the operation of the motor using the host controller of the transistor output type.

### •Sink Logic

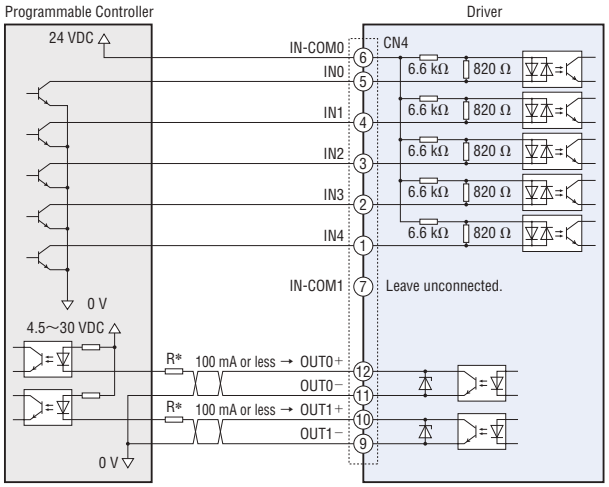


### •Source Logic

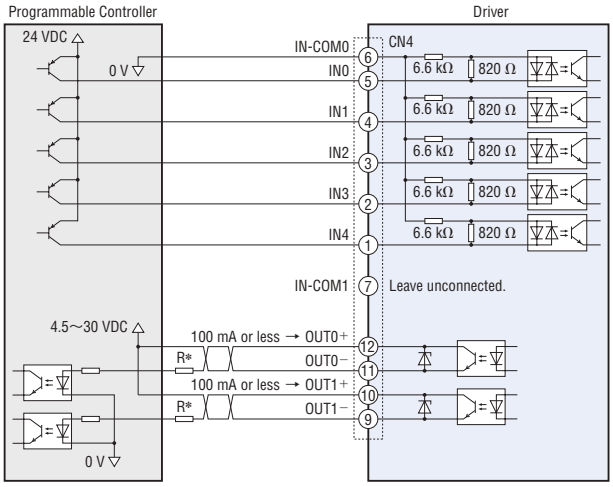


*Recommended resistance value
For 24 VDC: 680 Ω~2.7 kΩ (2 W)
For 5 VDC: 150 Ω~560 Ω (0.5 W)

**Note**

The current applied to OUT0 and OUT1 must be 100 mA or less. If this value is exceeded, connect the limiting resistance R.

## ◇When an External Control Equipment with a Built-in Clamp Diode is used

With external control equipment with built-in clamping diodes connected, if the power of the external control equipment is turned off with the driver turned on, the motor may rotate due to current flowing around. The motor may also rotate even if the driver and the external control equipment are simultaneously turned ON/OFF because these two devices have different current capacities.

To turn off the power, first turn off the driver and then the external control equipment.

To turn on the power, first turn on the external control equipment and then the driver.

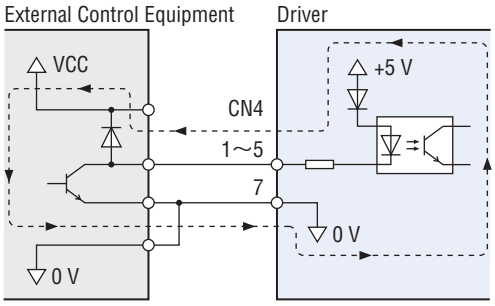


## ◇When using for the Multiple Speed Operation

By switching the ON/OFF of the M0 or M1 input, the multiple speed operation becomes available.

### •Example of operating conditions

| Operating Data No. | M0 | M1 | Speed [r/min] |
|---|---|---|---|
| 0 | OFF | OFF | 3000 |
| 1 | ON | OFF | 1000 |
| 2 | OFF | ON | 2000 |
| 3 | ON | ON | 500 |

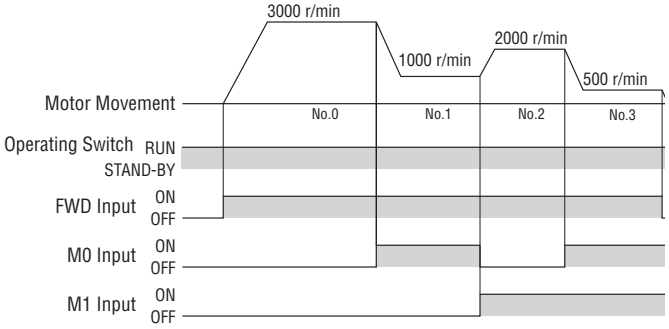

# Installation of Hollow Shaft Load

## Example of Load Shaft Installation Method

The load installation method differs depending on the shape of the load shaft. See the figures below.

- The hollow output shaft is processed to a tolerance of the inner diameter H8, and incorporates a key slot for load shaft installation.
- The recommended tolerance of the load shaft is h7.

Note

- To prevent sticking, apply a coat of grease on the exterior surface of the load shaft and interior surface of the hollow output shaft.

### ◇Stepped Load Shaft

•Fixing method using the end plate

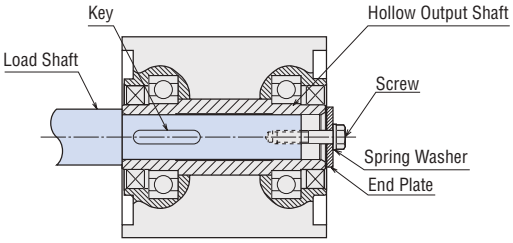


•Fixing method using the retaining ring for hole

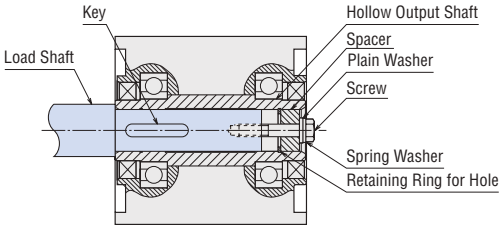


### ◇For Non-Stepped Load Shaft

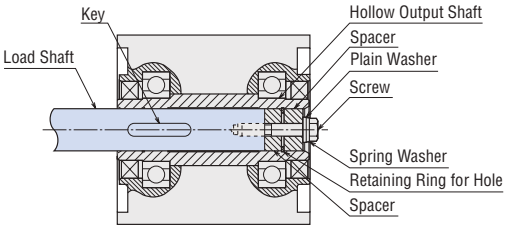


### ◇Recommended Load Shaft Installation Method

Unit: mm

| Output Power | | 60 W | 120 W | 200 W, 400 W | |
|---|---|---|---|---|---|
| Gear Ratio | | **10~200** | **10~200** | **5~50** | **100, 200** |
| Inner Diameter of Hollow Output Shaft (H8) | | $\phi 12\ ^{+0.027}_{0}$ | $\phi 15\ ^{+0.027}_{0}$ | $\phi 25\ ^{+0.033}_{0}$ | $\phi 30\ ^{+0.033}_{0}$ |
| Recommended Tolerance of Load Shaft (h7) | | $\phi 12\ ^{0}_{-0.018}$ | $\phi 15\ ^{0}_{-0.018}$ | $\phi 25\ ^{0}_{-0.021}$ | $\phi 30\ ^{0}_{-0.021}$ |
| Screw Size | | M5 | M6 | M6 | M8 |
| Spacer Dimensions | Outer Diameter | $\phi$11.5 | $\phi$14.5 | $\phi$24.5 | $\phi$29.5 |
| | Inner Diameter | $\phi$6 | $\phi$7 | $\phi$7 | $\phi$9 |
| | Width | 3 | 3 | 4 | 5 |
| Nominal Hole Diameter of Retaining Ring (C type retaining ring) | | $\phi$12 | $\phi$15 | $\phi$25 | $\phi$30 |
| End Plate Thickness | | 3 | 3 | 4 | 5 |
| Stepped Shaft La length | | 55 | 72 | 96 | 96 |

- Retaining rings for holes, spacers, screws or other parts used to install the load shaft are not supplied.

### ◇Recommended Load Shaft Length

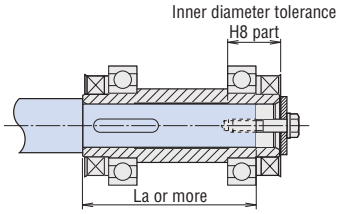

## Permissible Radial Load Calculation of the Hollow Shaft Type

Formulas to calculate permissible radial loads vary depending on the mechanism.

### ◇When One End of the Load Shaft is Not Supported by a Bearing Unit

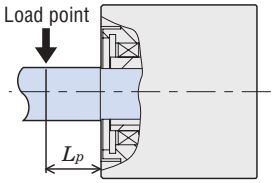


- 60 W

Permissible Radial Load $W$ [N] $= \dfrac{68.5}{48.5+Lp} \times F_0$

- 120 W

Permissible Radial Load $W$ [N] $= \dfrac{79}{59+Lp} \times F_0$

- 200 W, 400 W (Gear ratio **5**~**50**)

Permissible Radial Load $W$ [N] $= \dfrac{95.5}{75.5+Lp} \times F_0$

- 200 W, 400 W (Gear ratio **100**, **200**)

Permissible Radial Load $W$ [N] $= \dfrac{102}{82+Lp} \times F_0$

### ◇When One End of the Load Shaft is Supported by a Bearing Unit

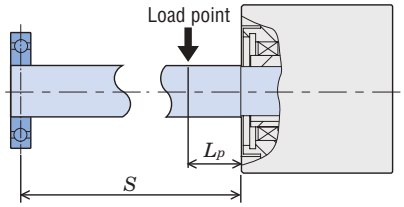


- 60 W

Permissible Radial Load $W$ [N] $= \dfrac{68.5(S+5.5)}{53(S-Lp)} \times F_0$

- 120 W

Permissible Radial Load $W$ [N] $= \dfrac{79(S+4)}{65(S-Lp)} \times F_0$

- 200 W, 400 W (Gear ratio **5**~**50**)

Permissible Radial Load $W$ [N] $= \dfrac{95.5(S-9)}{104.5(S-Lp)} \times F_0$

- 200 W, 400 W (Gear ratio **100**, **200**)

Permissible Radial Load $W$ [N] $= \dfrac{102(S-9)}{111(S-Lp)} \times F_0$

$F_0$ [N]: Permissible radial load when the reference point is at 20 mm from the installation surface.
$Lp$ [mm]: Distance from the installation surface to the load point.
$S$ [mm]: Distance from the installation surface to the bearing unit.

For details on the permissible radial load when the reference position is 20 mm away from the flange installation surface, see the Specifications table. ➜ Pages 04-20 and 04-22



Click Here
For more information, please visit ORIENTAL MOTOR Website:
https://www.orientalmotor.com.sg/om/tp/index.html

# Accessories (Sold Separately)

## Cable System Configuration

### Cable Type

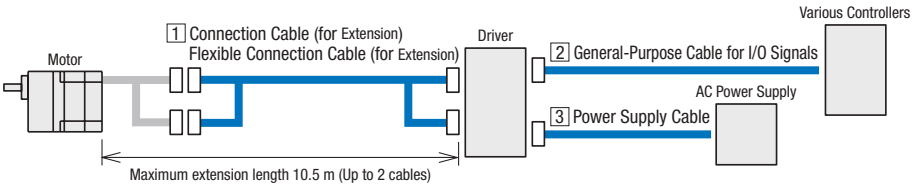


### Connector Type

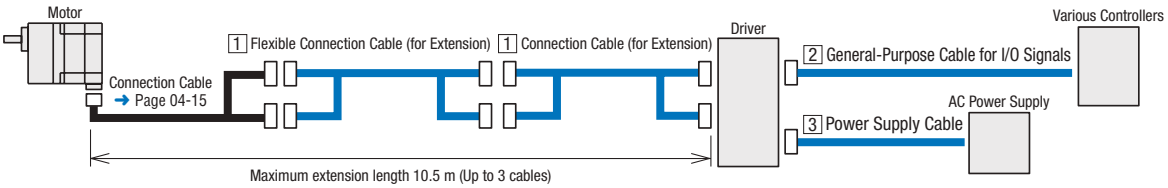


04

BMU Series

## 1 Connection Cables (for Extension)/Flexible Connection Cables (for Extension)

These cables are used to connect the motor and driver. When using additional connection cables (for extension) and/or flexible connection cables (for extension), make sure that the total length is 10.5 m or less. Use a flexible connection cable in applications where the cable is bent and flexed.

## Product Line

### Connection Cables

| Product Name | Length L (m) | List Price |
|---|---|---|
| **CC01BL2** | 1 | SGD38 |
| **CC02BL2** | 2 | SGD53 |
| **CC03BL2** | 3 | SGD68 |
| **CC05BL2** | 5 | SGD98 |
| **CC07BL2** | 7 | SGD128 |
| **CC10BL2** | 10 | SGD173 |

### Flexible Connection Cables

| Product Name | Length L (m) | List Price |
|---|---|---|
| **CC01BL2R** | 1 | SGD75 |
| **CC02BL2R** | 2 | SGD105 |
| **CC03BL2R** | 3 | SGD135 |
| **CC05BL2R** | 5 | SGD195 |
| **CC07BL2R** | 7 | SGD255 |
| **CC10BL2R** | 10 | SGD345 |

## Dimensions (Unit: mm)

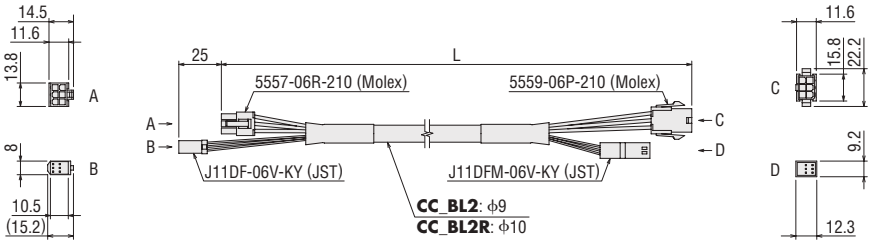


For details, check the Oriental Motor website or contact the Oriental Motor sales office.

**http://www.orientalmotor.com.sg/**

## 2 General-Purpose Cables for I/O Signals

Connects the driver and various controller. Choose as many cables as the number of connected I/O signal sources.

### Product Line

| Product Name | Length L (m) | Number of Lead Line Cores | Outer Diameter D (mm) | AWG | List Price |
|---|---|---|---|---|---|
| **CC06D005B-1** | 0.5 | 6 | ϕ5.4 | 24 | SGD17 |
| **CC06D010B-1** | 1 | | | | SGD19 |
| **CC06D015B-1** | 1.5 | | | | SGD21 |
| **CC06D020B-1** | 2 | | | | SGD23 |
| **CC10D005B-1** | 0.5 | 10 | ϕ6.7 | | SGD19 |
| **CC10D010B-1** | 1 | | | | SGD21 |
| **CC10D015B-1** | 1.5 | | | | SGD24 |
| **CC10D020B-1** | 2 | | | | SGD26 |
| **CC12D005B-1** | 0.5 | 12 | ϕ7.5 | | SGD21 |
| **CC12D010B-1** | 1 | | | | SGD24 |
| **CC12D015B-1** | 1.5 | | | | SGD27 |
| **CC12D020B-1** | 2 | | | | SGD30 |
| **CC16D005B-1** | 0.5 | 16 | ϕ7.5 | | SGD22 |
| **CC16D010B-1** | 1 | | | | SGD25 |
| **CC16D015B-1** | 1.5 | | | | SGD28 |
| **CC16D020B-1** | 2 | | | | SGD31 |

## 3 Power Supply Cables

This cable used for connecting the driver and the power supply comes with or without a power supply plug.

Plug included

### Product Line

| Product Name | Type | Power Supply Voltage | Length L (m) | List Price |
|---|---|---|---|---|
| **CC01AC03P** | Plug included | Single-Phase 100-120 VAC | 1 | SGD19 |
| **CC02AC03P** | | | 2 | SGD25 |
| **CC03AC03P** | | | 3 | SGD31 |
| **CC01AC03N** | Plug not included | Single-Phase 100-120 VAC Single-Phase 200-240 VAC | 1 | SGD13 |
| **CC02AC03N** | | | 2 | SGD19 |
| **CC03AC03N** | | | 3 | SGD25 |
| **CC01AC04N** | Plug not included | Three-Phase 200-240 VAC | 1 | SGD13 |
| **CC02AC04N** | | | 2 | SGD19 |
| **CC03AC04N** | | | 3 | SGD25 |



For details, check the Oriental Motor website or contact the Oriental Motor sales office.
**http://www.orientalmotor.com.sg/**

## Flexible Couplings

These are clamp type couplings for connecting the motor/gearhead shaft with the driven shaft.
Couplings usable for the parallel shaft gearhead **GFV** gear and the round shaft type are available.

- Couplings can also be used with round shaft types. Select a coupling with the same inner diameter size as the motor shaft diameter.

### Product Line

| Product Name | List Price | Applicable Product (Motor) |
|---|---|---|
| **MCL30** Type | SGD61 | **BLM230** **GFV** Gear |
| **MCL40** Type | SGD93 | **BLM460** **GFV** Gear |
| **MCL55** Type | SGD124 | **BLM5120** **GFV** Gear |
| **MCL65** Type | SGD197 | **BLM6200** **GFV** Gear<br>**BLM6400** **GFV** Gear |

## Motor and Gearhead Mounting Brackets

This is a convenient, dedicated mounting bracket for mounting or fixing the parallel shaft gearhead **GFV** gear and the round shaft type.

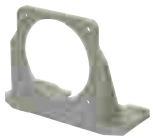

### Product Line

| Product Name | List Price | Applicable Product (Motor) |
|---|---|---|
| **SOL2M4F** | SGD24 | **BLM230**<br>**BLM260** (Round Shaft Type) |
| **SOL4M6F** | SGD29 | **BLM460** (**GFV** Gear) |
| **SOL5M8F** | SGD31 | **BLM5120**<br>**BLM5200**, **BLM5400** (Round Shaft Type) |
| **SOL6M8F** | SGD34 | **BLM6200**, **BLM6400** (**GFV** Gear) |

Note

When mounting the motor on the mounting bracket, place the motor connector on the top or on the side. If the connector is placed on the bottom, it interferes with the bracket or the installation surface and therefore is not recommended.

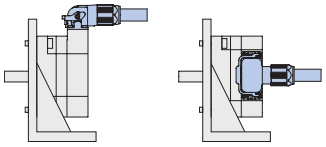

Connector on the Top　　Connector on the Side

## Circuit Products Mounting Brackets

Mounting brackets for installing the driver are available.
Mounting brackets have product lines for different applications such as for DIN rail installation, installation on the wall surface, and for conveyor guide installation.

### Product Line

Material: SPCC　Surface treatment: Electroless nickel plating

| Product Name | Application | List Price | Applicable Product (Driver) |
|---|---|---|---|
| **MADP05-15** | For DIN Rail Installation | SGD23 | **BMUD30**<br>**BMUD60**<br>**BMUD120** |
| **MAFP04-15** | For Wall Surface Installation | SGD23 | |
| **MAFP05V** | For Conveyor Guide Installation | SGD12 | |
| **MAFP05H** | | SGD12 | |
| **MADP05-12B** | For DIN Rail Installation | SGD29 | **BMUD200**<br>**BMUD400** |
| **MAFP04-12B** | For Wall Surface Installation | SGD29 | |

Note

- Circuit products mounting brackets cannot be used together with the dust-resistant and watertight type front cover.

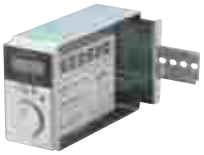

**MADP05-15**
< Application example >

**MADP05-12B**
< Application example >

**MAFP04-15**
< Application example >

**MAFP05V**
< Application example >

**MAFP05H**
< Application example >

## Dust-Resistant and Watertight Type　Front Covers

Protects the front panels of drivers.
The degree of protection conforms to the IP64 specification.
The cover can also be used to prevent operation errors on the front panel.

### Product Line

| Product Name | List Price | Applicable Product (Driver) |
|---|---|---|
| **PCF12-B** | SGD31 | **BMUD30**<br>**BMUD60**<br>**BMUD120** |
| **PCF15-B** | SGD44 | **BMUD200**<br>**BMUD400** |

Note

- The dust-resistant and watertight type front cover cannot be used together with circuit products mounting brackets.

**PCF12-B**

**PCF15-B**

For details, check the Oriental Motor website or contact the Oriental Motor sales office.
**http://www.orientalmotor.com.sg/**

# Motor Covers

Protects the motor. The cover is designed with IP66 protection to ensure use in environments where water or dust disperses.

With a hole plug
**PCM5**

With a cable gland
**PCM5-C**

## Product Line

### ◇Motor Cover

| Product Name | List Price |
|---|---|
| **PCM5** | SGD44 |
| **PCM5-C** | SGD54 |

### ◇Replacement Gaskets

Ideally replace the gaskets after 1 year use.

| Product Name | List Price | Set Details |
|---|---|---|
| **PCMP5** | SGD8 | 2 gaskets |

## Applicable Product (Cable type)

| Output Power | Motor |
|---|---|
| 30 W, 60 W, 120 W | Parallel Shaft Gearhead **GFV** Gear Round Shaft Type |

## Applicable Product (Connector type)

| Output Power | Motor | Cable Drawing Direction |
|---|---|---|
| 30 W, 60 W, 120 W | Parallel Shaft Gearhead **GFV** Gear* | Drawing on the output shaft side 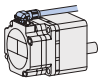 |
| | Round Shaft Type | Drawing on the counter-output shaft side |

*The parallel shaft gearhead **GFV** gear cannot be used to draw the cable on the counter-output shaft side.

# Torque Arms NEW

Prevents the gearhead from spinning due to reaction force from the driven shaft when a hypoid right-angle hollow shaft **JH** gear is installed.

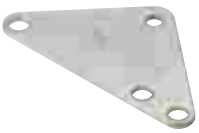

**TAF2S-12-NS**

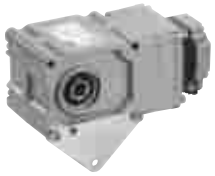

< Application example >

## Product Line

| Product Name | List Price | Applicable Product | Main Specifications |
|---|---|---|---|
| **TAF2S-12-NS** | SGD25 | **BLM460SHPK-4H**□ | Material: SS400<br>Surface treatment: Trivalent chromate |
| **TAF2S-15-NS** | SGD26 | **BLM5120HPK-5H**□ | |
| **TAF3S-25-2-NS** | SGD33 | **BLM5200HPK-5XH**□<br>**BLM5400HPK-5XH**□ | |
| **TAF3S-30-3-NS** | SGD71 | **BLM5200HPK-5YH**□<br>**BLM5400HPK-5YH**□ | |

●The □ in the applicable product is replaced with a number that represents the gear ratio and a code that represents the output shaft specification.

## Dimensions (Unit: mm)

### ◇TAF2S-12-NS

Mass: 75 g

2D CAD A1608 3D CAD

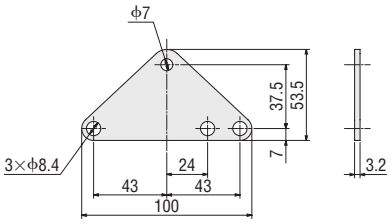


### ◇TAF2S-15-NS

Mass: 125 g

2D CAD A1609 3D CAD

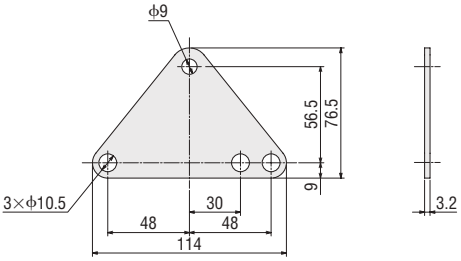


### ◇TAF3S-25-2-NS

Mass: 200 g

2D CAD A1610 3D CAD

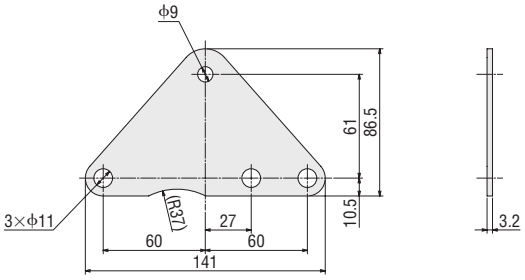


### ◇TAF3S-30-3-NS

Mass: 400 g

2D CAD A1611 3D CAD

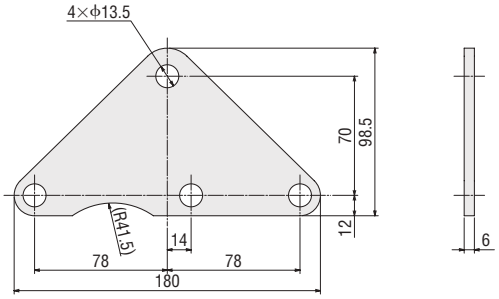


For details, check the Oriental Motor website or contact the Oriental Motor sales office.

**http://www.orientalmotor.com.sg/**

# Enclosure Boxes

These boxes are useful for when a driver is installed.
The box provides protection to the driver and wiring.

## Product Line

### ◇Driver Boxes

| Product Name | List Price | Applicable Products (Driver) |
|---|---|---|
| **PCD12** | SGD206 | **BMUD30**<br>**BMUD60** |
| **PCD12-1** | SGD206 | **BMUD120** |
| **PCD12A** | SGD206 | **BMUD200** |

### ◇Cable Gland (For I/O signals)

Use when using input/output signals to perform operations.

| Product Name | List Price |
|---|---|
| ***MPG*** | SGD8 |

＜Application example＞

BRUSHLESS MOTORS

**BLE2** Series

# ADVANCED MODELS

## THAT SUPPORT HIGH FUNCTIONALITY AND USABILITY AT THE SAME TIME

## Overview of **BLE2** Series

The mechanism of the motor is renewed, resulting in compact, high power, and highly efficiency motor. The driver employing the digital display panel allows you to easily set the speed with the knob.

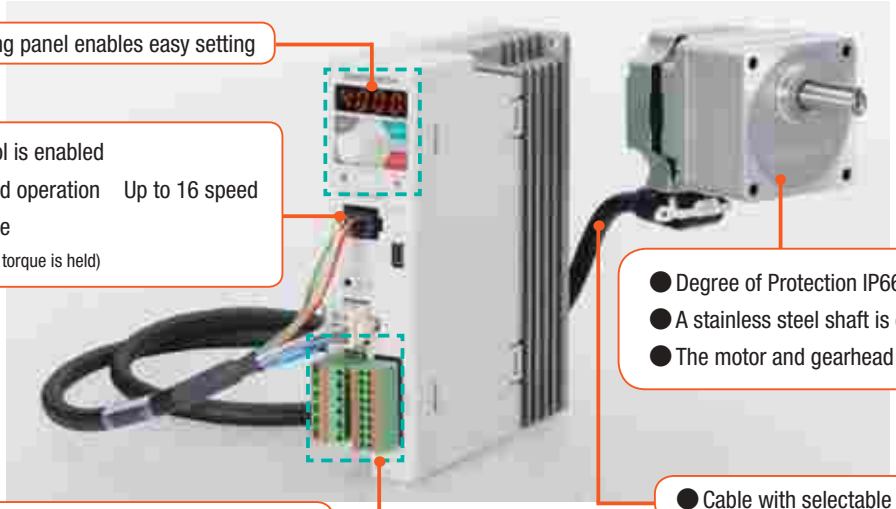

- The operating panel enables easy setting
- Torque control is enabled
- Multiple speed operation Up to 16 speed
- Holding torque
  (50% of the rated torque is held)
- Degree of Protection IP66*
- A stainless steel shaft is equipped as a standard*
- The motor and gearhead have already assembled
- Cable with selectable drawing direction
- Quick and reliable wiring and connection

*The protection rating and the output shaft material depend on the gearhead used. See the Lineup table for details. ➜ Page 05-08



## The Operating Panel Enables Easy Setting

The operating panel is installed infront. While checking the digital display, you can set the operation data or parameters with the operation keys or the setting dial.

- The operating panel cannot be detached from the driver.

- Speed Setting Range 80～4000 r/min*
  *Depends on the gearhead.
- Speed Regulation ±0.2%*
  *Digital setting

## Quick and Reliable Wiring and Connection

The connector enables quick and reliable connection.

## Degree of Protection IP66*

The connector is new and specially developed for compact motors. It connects the motor and the driver directly.
In addition to the motor mechanism, it improves dustproof and waterproof performance that allows the motor to obtain a Degree of Protection IP66*.

### New connector

The built-in gasket and the O-ring contributes to improve waterproof performance. The locking lever makes connection easy, eliminating the trouble to fix screws.

- Connector Structure

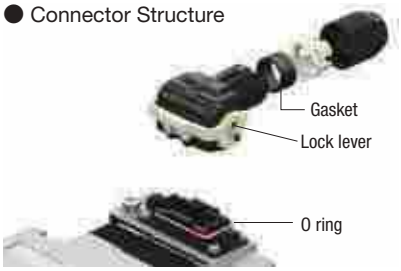


- How to Install

Plug the connector. Turn the locking lever. Connection is completed.

### Stainless steel shaft equipped as a standard*

Highly rustproof, anti-corrosive stainless steel is used for the shaft. Stainless steel is also used for the parallel key and the installation screws.

*The protection rating and the output shaft material depend on the gearhead used. For details, refer to the Lineup table. ➜ Page 05-08

# Cable with Selectable Drawing Direction

Two types of connection cables are available to choose from, depending on the direction to draw out. For direct connections between the motor and the driver, one connection cable can extend up to 20 m, eliminating the need for a relay.

## Selectable cable direction

Two types are available to choose from depending on the direction to draw out the motor cable.
(The round shaft type draws only from the counter-output shaft side.)

Drawing on the output shaft side

Drawing on the counter-output shaft side

## Connects the motor and the driver directly

One cable can extend up to 20 m without a relay, eliminating the need for relays. Only this one cable is required for the power, signals and grounding, reducing wiring efforts.

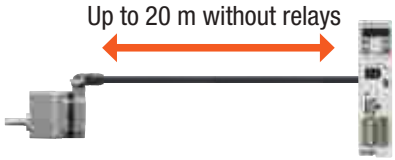


# Assembled Motor and Gearhead

The motor and gearhead comes pre-assembled. This reduces assembly time and allows immediate installation of the unit to equipment.

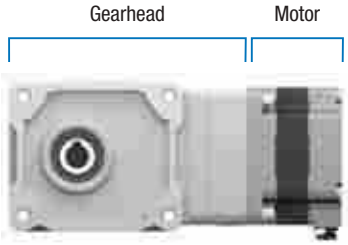


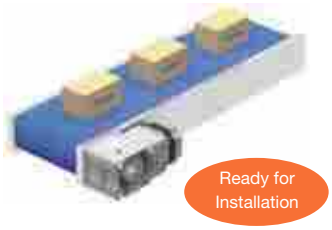


You can remove the gearhead and change the mounting angle by 90-degree intervals. You can change the connector position depending on the equipment.

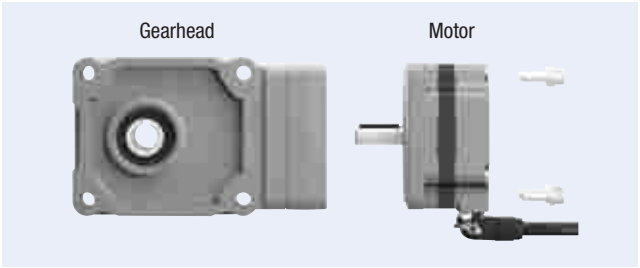


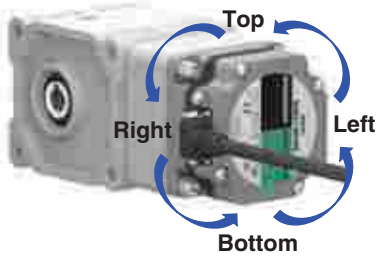


# Effective Use of the Installation Space

The optimum arrangement of the components in the driver has compact the size of the driver and made it thinner. Since multiple drivers can be closely attached with each other, the installation space can be reduced, or the number of drivers that can be installed in a certain space can be increased.

## Compact and thin driver

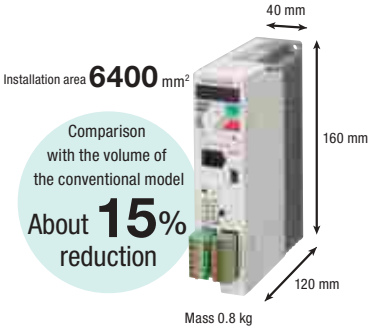


## Multiple drivers that can be closely attached with each other

Conventional model **BLE** Series drivers

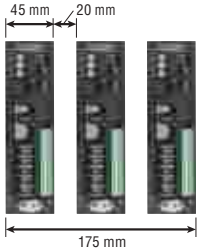


**BLE2** Series drivers

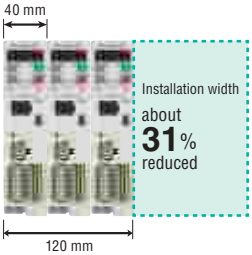


**Conditions for closely attaching multiple drivers with each other**

- Ambient temperature 0～+50˚C (200 W only 0～+40˚C)
- Install the multiple drivers to a heat sink (Material: Aluminum, 350×350×2 mm equivalent).
- Maximum number of multiple drivers that can be closely attached: 3 drivers

# Supporting Customers with Enhanced Functions

The motor unit supports 4 data setting methods and provides various functions that can be used depending on purposes.
The use of support software are made easily use, allows checking of the startup and operating conditions of the equipment.

## Operating method

- Local operation: Operation with the operating panel. Can be applied to test operation.
- Remote operation: Operation with external signals or support software **MEXE02**.

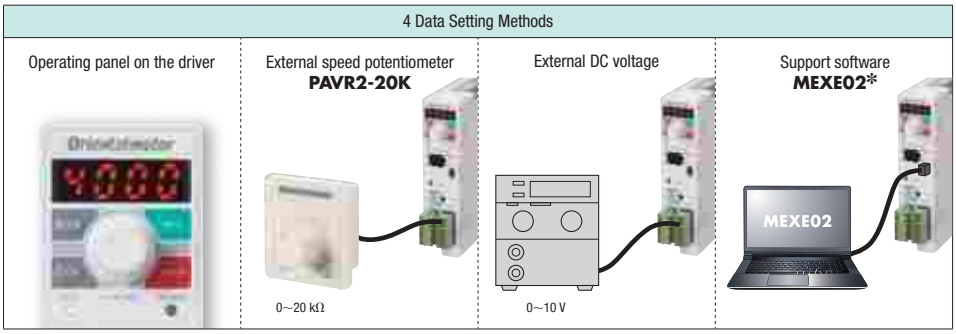


*When using support software **MEXE02**, you can connect the driver to the PC with a commercially available USB cable.

## Possible settings

The motor unit provides functions that match the conditions of use by the customer.

| Setting | Purpose/Objective | Parameter | Setting Method | | | |
|---|---|---|---|---|---|---|
| | | | Operating Panel | External Speed Potentiometer **PAVR2-20K** | External DC Voltage | Support Software **MEXE02** |
| Speed | Can be operated at any rotation speed. | 80～4000 r/min | ● | ● | ● | ● |
| Torque Limit | The maximum output torque of the motor can be controlled for safety or restricted in accordance with the load. | 0～300% | ● | ● | ● | ● |
| Acceleration/ Deceleration Time | Acceleration time or deceleration time can be set to prevent load or impact on the unit during its startup or stop. | 0～15.0 sec. | ● | – | – | ● |
| Multiple Speed Operation | Can be operated in second or higher gear. | Up to 16 speed | ● | – | – | ● |
| Multi-Motor Control | Multiple motors can be operated at the same speed. | Up to 20 motor units (when a potentiometer is used) | – | ● | ● | – |

## Main useful functions

The table below shows the main functions that are provided through the operating panel or support software **MEXE02**.

| Functions | Purpose/Objective | Description |
|---|---|---|
| Display of the Load Factor | To check the torque that the motor generates. | This shows the load factor on the assumption that the rated torque of the motor is 100%. (Display range: 0～300%) |
| Gear Ratio | To allow the conveyor transport speed or the speed reduced by the gearhead to be displayed. | Setting the gear ratio allows the converted rotation speed to be displayed. |
| Setting the Upper and Lower Limits of the Rotation Speed | To operate the motor unit at a speed which is within the set speed control range. | The upper and lower limits of the rotation speed can be set. |
| Teaching of the Speed | To change the speed during motor movement. | During motor movement, the monitor mode allows the change of the rotation speed. |
| Simple Holding Torque | To simply hold the torque during a motor stop. | Electrical holding torque can be generated during a motor stop. (Up to 50% of the rated torque can be held.)<br>Note When power supply to the driver is cut, holding torque disappears. Therefore, it cannot be used for fall prevention when stopped. |
| Shock-absorbing Filter | To reduce the shock during a startup and stop. | This function allows slow acceleration after a startup and slow stop before the completion of the stop to prevent the transported load from moving. |
| Alarm | To check the contents of the trouble. | This function allows the identification of the trouble cause such as overload, poor connection, incorrect operation, etc. to enable you to swiftly deal with the cause. |
| Information | To use information for operation check or periodic maintenance. | Information is output before the output of an alarm. Inputting an appropriate value to the parameter of each information item will be helpful to the maintenance of the equipment. |
| Editing Lock | To protect the set data. | This function prevents you from editing or deleting data or parameters through the operating panel and disables local operation. |

# Useful Functions Enabled by Support Software **MEXE02**

The support software can be downloaded from the Oriental Motor website.

Support software **MEXE02**

## Monitor Functions

The software contains various monitor functions that enable checking of conditions such as motor operating conditions.
Using functions suitable for each condition may shorten the time for starting up or adjusting the equipment or lead to effective maintenance.

### Waveform Monitoring

During a startup

Like an oscilloscope, the monitor allows you to check motor drive conditions and output signal status. Use this during the startup or adjustment of the attachment.

### Alarm Monitor

During operation | For maintenance

If an error occurs, you can check the error details, operation conditions at the time of error occurrence, and measures to be taken. The checking of the measures facilitates response to the error.

## Test Functions

These functions allow the motor to independently operate or you to check the connection with the host system. Using the functions at the startup of the equipment can save time.

### Speed can be Adjusted During Test Operation (teaching of the speed)

During a startup

This test function allows changes of speed data during test operation before connection with the host system. Since the changed speed data is set and saved as is, the time required for the startup of the equipment can be shortened.

### I/O Monitor

During a startup | During operation

The monitor allows the testing of the input/output signals of direct I/O. You can monitor input signals as well as external DC voltage and the output signals. This function is convenient for checking connection with the host system.

# Types and Features of Gearheads

These high-strength gearheads support high-speed rotation and high outputs the brushless motors provide.
You can choose from various gearheads to meet your application, requirements, or installation.

## Type

### Parallel Shaft Gearhead

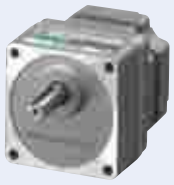


Parallel Shaft Gearhead **GFV** Gear

Parallel Shaft Gearhead **JV** Gear

### Legged Gearhead

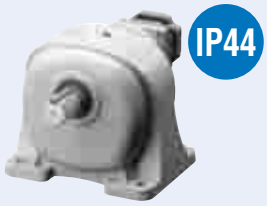


Legged Gearhead **JB** Gear

## Installation Advantages

### Installs on the Flange (**JV** Gear)

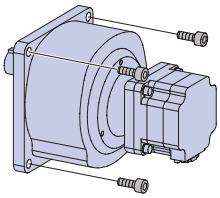

### Improving the Installation Accuracy (**GFV** Gear)

The boss of the output shaft and the installation surface are shaped. This improves the accuracy of device installation.

### Tapped Hole on the Output Shaft End (**GFV** Gear, □80 mm or more)

The output shaft for the gearhead has a tapped hole at the end.
The hole can be used for supporting the prevention of coming out of a transmission component.

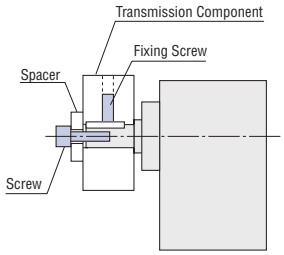


Usage example of the screw hole on the output shaft end

### No Mounting Bracket Required

The shape quickly attach to your device.

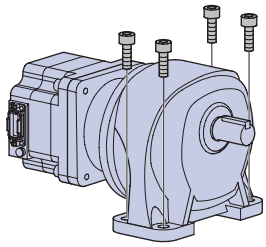

### High Rigidity/Integral Structure

Allows you to easily design the shaft center with the integral installation surface structure.

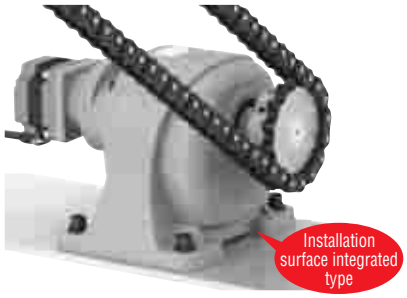


## Features

### High Strength Gearhead (**GFV** Gear)

A heat treatment strengthens the gears and the bearing diameter is enlarged for a higher strength.
The gearhead has 2 to 3 times of the permissible torque than AC motor gearheads with the same frame size, contributing to downsized equipment.

### High Gear Ratio (**JV** Gear)

This line has products with gear ratios up to 1/450.

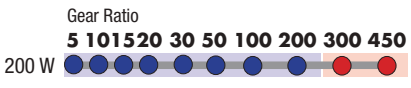


● represents parallel shaft gearhead **GFV** gear

### Long Life (**GFV** Gear)

The gearhead has a long life using special bearings and grease for high-speed rotation. It achieves a rated life of 10,000 hours.

### High Permissible Torque

The torque is not saturated and the motor torque can be maximized.

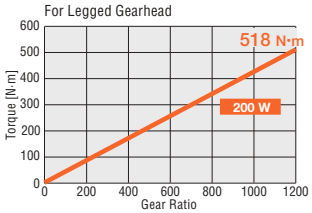


[At 3000 r/min]

### High Strength

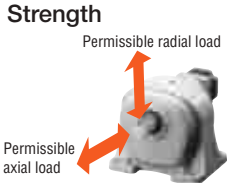


Permissible Radial Load ..... 3672 N
Permissible Axial Load ..... 577 N

[With 1/1200 gear ratio, at 3000 r/mim]

### High Gear Ratio

This line has products with gear ratios up to 1/1200.

Gear Ratio
**5 10 20 30 50 100 200 300 450 600 1200**

# Right-Angle Shaft Gearhead

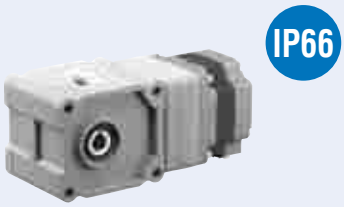


Hypoid Right-Angle Hollow Shaft **JH** Gear

## Space Saving

Placing the motor at right angles saves space.

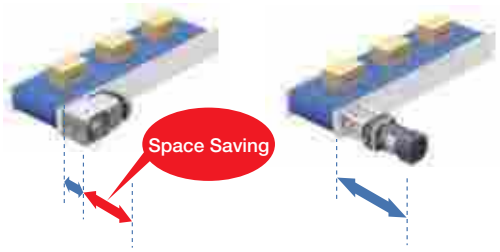


## Cost Saving

Reduced couplings, belts, pulleys, and other parts contribute towards reduced parts costs and assembling steps.

## Unsaturated Permissible Torque

The permissible torque is not saturated even at high gear ratio.
Therefore, the benefit of the motor torque can be maximized.

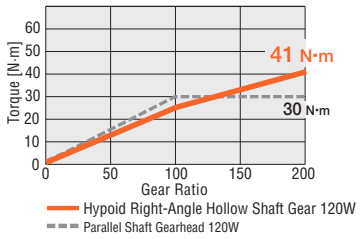


[At 3000 r/min]

## High Strength

**Comparison with parallel shaft gearhead**

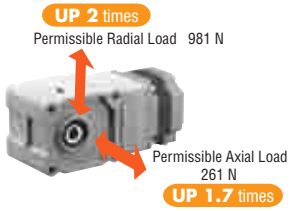


[1/200 at 3000 r/min]

# Lineup

## Motor

## Driver

## Connection Cable

| Type/Material of the Output Shaft | | | Output Power [W] | Gear Ratio | Degree of Protection | Output Power [W] | Power Supply Voltage [VAC] | Cable |
|---|---|---|---|---|---|---|---|---|
| Parallel Shaft Gearhead | **GFV** Gear<br>Stainless Steel Shaft | | 30 | **5**, **10**, **15**, **20**, **30**, **50**, **100**, **200** | IP66 | 30 | Single-Phase 100-120<br>Single-Phase/ Three-Phase 200-240 | 0.5～20 m |
| | | | 60 | | | 60 | | |
| | | | 120 | | | 120 | | |
| | | | 200 | | | 200 | Single-Phase/ Three-Phase 200-240 | |
| | | | 400 | **5**, **10**, **15**, **20**, **30**, **50** | | NEW 400 | Three-Phase 200-240 | |
| | **GFV** Gear<br>Supports Food Machinery Grease H1<br>Stainless Steel Shaft | | 30 | **5**, **10**, **15**, **20**, **30**, **50**, **100**, **200** | | 30 | Single-Phase 100-120<br>Single-Phase/ Three-Phase 200-240 | Drawing on the output shaft side |
| | | | 60 | | | 60 | | |
| | | | 120 | | | 120 | | |
| | **JV** Gear<br>Stainless Steel Shaft | | 200 | **300**, **450** | | 200 | Single-Phase/ Three-Phase 200-240 | Drawing on the counter-output shaft side*2 |
| Legged Gearhead **JB** Gear<br>Iron Shaft | | | 200 | **5**, **10**, **20**, **30**, **50**, **100**, **200**, **300**, **450**, **600**, **1200** | IP44 | 200 | Single-Phase/ Three-Phase 200-240 | |
| Hypoid Right-Angle Hollow Shaft **JH** Gear<br>Stainless Steel Shaft | | | 60 | **10**, **15**, **20**, **30**, **50**, **100**, **200** | IP66 | 60 | Single-Phase 100-120<br>Single-Phase/ Three-Phase 200-240 | |
| | | | 120 | | | 120 | | |
| | | | 200 | **5**, **10**, **15**, **20**, **30**, **50**, **100**, **200** | | 200 | Single-Phase/ Three-Phase 200-240 | |
| Round Shaft Type*1<br>Stainless Steel Shaft | | | 30 | – | IP66 | 30 | Single-Phase 100-120<br>Single-Phase/ Three-Phase 200-240 | |
| | | | 60 | | | 60 | | |
| | | | 120 | | | 120 | | |
| | | | 200 | | | 200 | Single-Phase/ Three-Phase 200-240 | |
| | | | NEW 400 | | | NEW 400 | Three-Phase 200-240 | |

*1 Some round shaft types have a milling cut shaft.

*2 The round shaft type can connect only the connection cable drawning from the counter-output shaft.

# Features of Brushless Motor

Because our brushless motor do not have brushes, which is the DC motor demerit, they produce less noise and are maintenance-free. The use of permanent magnets allows for compact, high output, and highly efficient motors.

## Wide Speed Control Range

The brushless motor has a broader speed control range compared to AC speed control motors and inverters. They are ideal for applications that require a constant torque for all speeds, low to high.

| Product Group | Speed Control Range* | Speed Ratio |
|---|---|---|
| Brushless Motor **BLE2** Series | **80~4000 r/min** | **1:50** |
| Inverter-Controlled Three-Phase Induction Motor | 200~2400 r/min | 1:12 |
| AC Speed Control Motor | 50Hz: 90~1400 r/min<br>60Hz: 90~1600 r/min | 1:15<br>1:17 |

*The speed control range varies depending on the model.

## Stable Speed Control

The brushless motors always monitor feedback signals from the motor and compare them with the set speed to adjust the applied voltage. For this reason, even if the load changes, stable rotation is performed from low speed to high speed.

● Speed Regulation Comparison (Reference values)

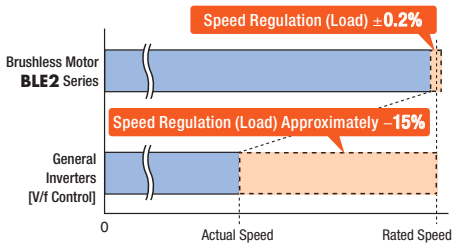


The table below shows the speed regulation (load) of each model. It shows how much the rotational speed varies by changing the load between 0 to rated torques.

| Model | Speed Regulation with Varying Loads | |
|---|---|---|
| | | Condition |
| **BLE2** Series | ±0.2% | 0 ~ rated torque at rated speed |
| **BMU** Series | ±0.2% | |
| **BLE** Series | ±0.5% | |
| **BXII** Series | ±0.05% | |
| **BLH** Series | ±0.5% | |

## Thin, Lightweight and High Power

The brushless motors use permanent magnets so that they are thin and lightweight but yet have high power. These contribute to the downsizing of equipment.

[Example of comparison between 200 W outputs]

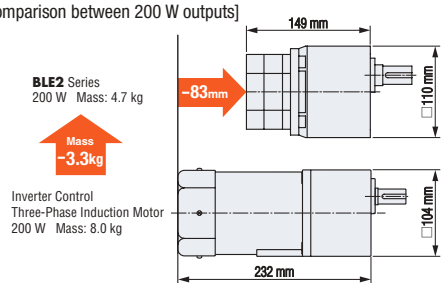


## Contributes to Energy Savings

The brushless motors use permanent magnets in the rotor, reducing secondary loss and power consumption.This contributes to energy savings with the equipment.

● Rated Output Power
50 Hz (representative values)

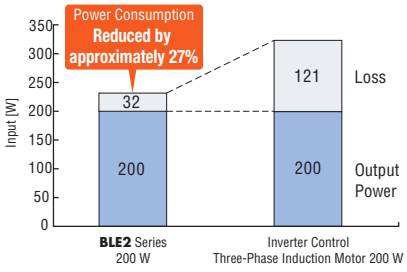

## System Configuration

The motor, driver and connection cable needs to be purchased separately.

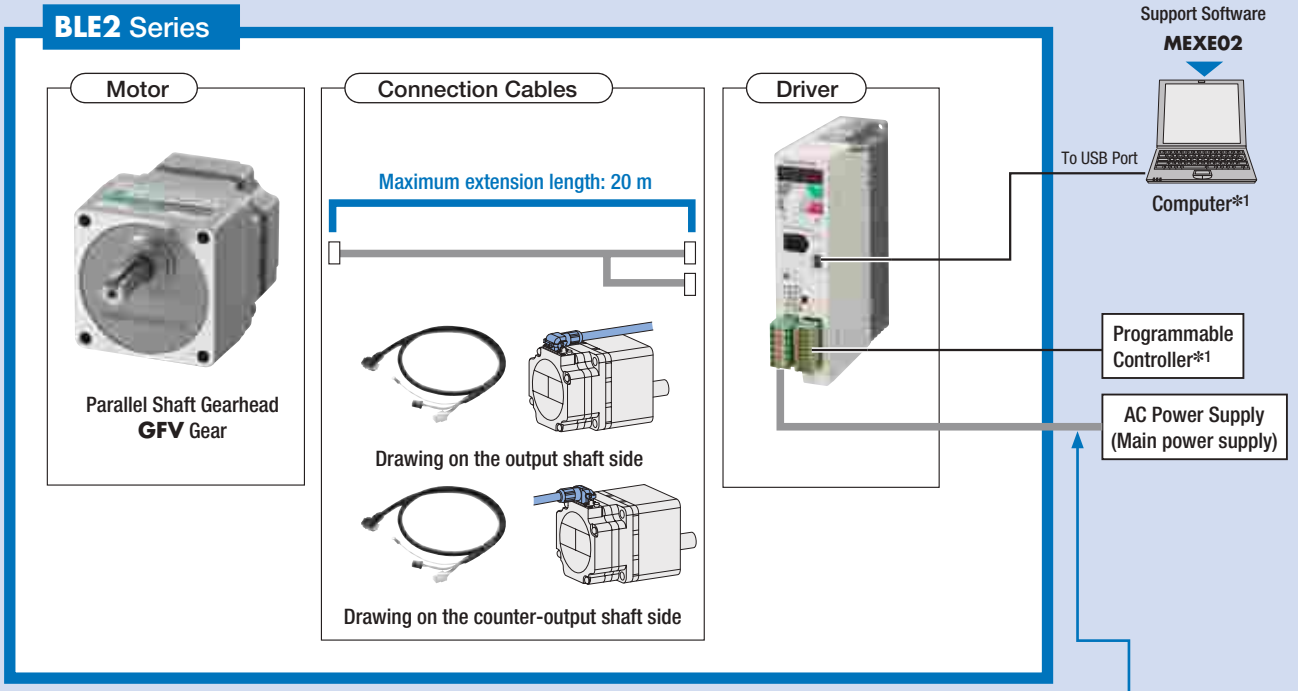


**Accessories**

Flexible Couplings
➜ Page 05-44

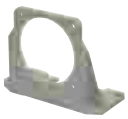

Motor and Gearhead Mounting Brackets
➜ Page 05-44

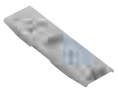

DIN Rail Mounting Bracket
➜ Page 05-44

External Speed Potentiometer*2
➜ Page 05-44

General-Purpose Cables for I/O Signals*2
➜ Page 05-43

Power Supply Cables
➜ Page 05-43

Torque Arms
➜ Page 05-45

Motor Covers
➜ Page 05-45

Regeneration Resistor
➜ Page 05-44

*1 Not supplied.

*2 The external speed potentiometer (**PAVR2-20K**) cannot be used together with a general-purpose cable for I/O signals.

### System Configuration Example

| BLE2 Series | | | + | Sold Separately | | |
|---|---|---|---|---|---|---|
| Motor Parallel Shaft Gearhead GFV Gear | Driver | Connection Cable (3 m) | | Mounting Bracket | Flexible Coupling | DIN Rail Mounting Bracket |
| **BLM230HP-10S** | **BLE2D30-A** | **CC030HBLF** | | **SOL2M4F** | **MCL301010** | **MADP02** |
| SGD265 | SGD264 | SGD66 | | SGD24 | SGD61 | SGD19 |

The system configuration shown above is an example. Other combinations are available.

## Product Number Code

### Motor

◇Parallel Shaft Gearhead **GFV** Gear/Round Shaft Type

**BLM 4 60 S H P - 50 S F**

① ② ③ ④ ⑤ ⑥ ⑦ ⑧ ⑨

| | | |
|---|---|---|
| ① | Motor Type | **BLM**: Brushless Motor |
| ② | Frame Size | **2**: 60 mm **4**: 80 mm **5**: 90 mm<br>**6**: 104 mm (110 mm for gearhead) |
| ③ | Output Power | **30**: 30 W **60**: 60 W **120**: 120 W<br>**200**: 200 W **400**: 400 W |
| ④ | Identification Part Number | **S** |
| ⑤ | Motor Connection Method | **H**: Connector Type |
| ⑥ | Motor Degree of Protection | **P**: IP66 Specification |
| ⑦ | Gear Ratio/Shaft Shape | Number: Gear Ratio of the Gearhead<br>**A**: Round Shaft Type<br>**AC**: Round Shaft Type (With milling cut) |
| ⑧ | Material of the Output Shaft | **S**: Stainless Steel |
| ⑨ | **F**: Supports Food Machinery Grease H1 | |

◇Hypoid Right-Angle Hollow Shaft **JH** Gear, Legged Gearhead **JB** Gear, Parallel Shaft Gearhead **JV** Gear

**BLM 5 200 H P K - 5 C B 50 B - L**

① ② ③ ④ ⑤ ⑥ ⑦ ⑧ ⑨ ⑩ ⑪ ⑫ ⑬

Motor Product Name | Gearhead Product Name

| | | | |
|---|---|---|---|
| Motor Product Name | ① | Motor Type | **BLM**: Brushless Motor |
| | ② | Frame Size | **4**: 80 mm **5**: 90 mm |
| | ③ | Output Power | **60**: 60 W **120**: 120 W<br>**200**: 200 W |
| | ④ | Identification Part Number | **S** |
| | ⑤ | Motor Connection Method | **H**: Connector Type |
| | ⑥ | Motor Degree of Protection | **P**: IP66 |
| | ⑦ | Combination Type Motor | **K**: Round Shaft Type (With key) |
| Gearhead Product Name | ⑧ | Combination Type Motor Frame Size | **4**: 80 mm **5**: 90 mm |
| | ⑨ | Gearhead Size | Code (Example) **C**<br>For the codes of the gearhead size, see ■Specifications (➔ Pages 05-17 and 05-20). |
| | ⑩ | Gearhead Type | **H**: **JH** Gear<br>**B**: **JB** Gear<br>**V**: **JV** Gear |
| | ⑪ | Gear Ratio | Number: Gear Ratio of the Gearhead |
| | ⑫ | Material of the Output Shaft | **S**: Stainless Steel **B**: Iron |
| | ⑬ | Connector Position | None: Below **-L**: Left |

### Driver

**BLE2D 60 - C**

① ② ③

| | | |
|---|---|---|
| ① | Driver Type | **BLE2D**: **BLE2** Series Driver |
| ② | Output Power | **30**: 30 W **60**: 60 W **120**: 120 W<br>**200**: 200 W **400**: 400 W |
| ③ | Power Supply Voltage | **A**: Single-Phase 100-120 VAC<br>**C**: Single-Phase, Three-Phase 200-240 VAC<br>**S**: Three-Phase 200-240 VAC |

### Connection Cable

**CC 010 H BL F**

① ② ③ ④ ⑤

| | | |
|---|---|---|
| ① | Cable Type | **CC**: Connection Cable |
| ② | Length | **005**: 0.5 m **010**: 1 m **015**: 1.5 m<br>**020**: 2 m **025**: 2.5 m **030**: 3 m<br>**040**: 4 m **050**: 5 m **070**: 7 m<br>**100**: 10 m **150**: 15 m **200**: 20 m |
| ③ | Motor Connection Method | **H**: Connector Type |
| ④ | Applied Model | **BL**: Brushless Motor |
| ⑤ | Cable Drawing Direction | **F**: Drawing on the Output Shaft Side<br>**B**: Drawing on the Counter-output Shaft Side |

# Product Line

A motor, driver, connection cable need to be purchase separately.

## Motors

### ◇Parallel Shaft Gearhead **GFV** Gear

| Output Power | Product Name | Gear Ratio | List Price |
|---|---|---|---|
| 30 W | **BLM230HP-□S** | **5, 10, 15, 20** | SGD265 |
| | | **30, 50, 100** | SGD274 |
| | | **200** | SGD286 |
| 60 W | **BLM460SHP-□S** | **5, 10, 15, 20** | SGD295 |
| | | **30, 50, 100** | SGD304 |
| | | **200** | SGD316 |
| 120 W | **BLM5120HP-□S** | **5, 10, 15, 20** | SGD370 |
| | | **30, 50, 100** | SGD381 |
| | | **200** | SGD393 |
| 200 W | **BLM6200SHP-□S** | **5, 10, 15, 20** | SGD448 |
| | | **30, 50** | SGD463 |
| | | **100, 200** | SGD481 |
| 400 W | NEW **BLM6400SHP-□S** | **5, 10, 15, 20** | SGD498 |
| | | **30, 50** | SGD513 |

### ◇Parallel Shaft Gearhead **GFV** Gear Supports Food Machinery Grease H1

| Output Power | Product Name | Gear Ratio | List Price |
|---|---|---|---|
| 30 W | **BLM230HP-□SF** | **5, 10, 15, 20** | SGD328 |
| | | **30, 50, 100** | SGD336 |
| | | **200** | SGD349 |
| 60 W | **BLM460SHP-□SF** | **5, 10, 15, 20** | SGD358 |
| | | **30, 50, 100** | SGD366 |
| | | **200** | SGD379 |
| 120 W | **BLM5120HP-□SF** | **5, 10, 15, 20** | SGD433 |
| | | **30, 50, 100** | SGD444 |
| | | **200** | SGD455 |

### ◇Parallel Shaft Gearhead **JV** Gear

| Output Power | Product Name | Gear Ratio | List Price |
|---|---|---|---|
| 200 W | **BLM5200HPK-5KV□S** | **300, 450** | SGD956 |

## Lineup of Other Products

| |
|---|
| Round Shaft Type<br>Milling Cut Output Shaft<br><br>Connector Position 4-direction |

● For details, contact your nearest Oriental Motor sales office.

### ◇Legged Gearhead **JB** Gear

| Output Power | Product Name | Gear Ratio | List Price |
|---|---|---|---|
| 200 W | **BLM5200HPK-5AB□B-L** | **5, 10, 20** | SGD538 |
| | **BLM5200HPK-5CB□B-L** | **30, 50** | SGD588 |
| | **BLM5200HPK-5EB□B-L** | **100, 200** | SGD788 |
| | **BLM5200HPK-5KB□B-L** | **300, 450** | SGD988 |
| | **BLM5200HPK-5SB□B-L** | **600, 1200** | SGD1,068 |

### ◇Hypoid Right-Angle Hollow Shaft **JH** Gear

| Output Power | Product Name | Gear Ratio | List Price |
|---|---|---|---|
| 60 W | **BLM460SHPK-4H□S** | **10, 15, 20** | SGD498 |
| | | **30, 50, 100** | SGD509 |
| | | **200** | SGD520 |
| 120 W | **BLM5120HPK-5H□S** | **10, 15, 20** | SGD516 |
| | | **30, 50, 100** | SGD528 |
| | | **200** | SGD539 |
| 200 W | **BLM5200HPK-5XH□S** | **5, 10, 15, 20** | SGD763 |
| | | **30** | SGD775 |
| | | **50** | SGD813 |
| | **BLM5200HPK-5YH□S** | **100** | SGD1,000 |
| | | **200** | SGD1,188 |

### ◇Round Shaft Type

| Output Power | Product Name | List Price |
|---|---|---|
| 30 W | **BLM230HP-AS** | SGD153 |
| 60 W | **BLM260HP-AS** | SGD168 |
| 120 W | **BLM5120HP-AS** | SGD200 |
| 200 W | **BLM5200HP-AS** | SGD238 |
| 400 W | NEW **BLM5400HP-AS** | SGD288 |

● A number in the box □ in the product name indicates the gear ratio.

## Drivers

| Output Power | Power Supply Voltage | Product Name | List Price |
|---|---|---|---|
| 30 W | Single-Phase 100-120 VAC | **BLE2D30-A** | SGD264 |
| | Single-Phase/Three-Phase 200-240 VAC | **BLE2D30-C** | SGD264 |
| 60 W | Single-Phase 100-120 VAC | **BLE2D60-A** | SGD264 |
| | Single-Phase/Three-Phase 200-240 VAC | **BLE2D60-C** | SGD264 |
| 120 W | Single-Phase 100-120 VAC | **BLE2D120-A** | SGD270 |
| | Single-Phase/Three-Phase 200-240 VAC | **BLE2D120-C** | SGD270 |
| 200 W | Single-Phase/Three-Phase 200-240 VAC | **BLE2D200-C** | SGD300 |
| 400 W | Three-Phase 200-240 VAC | NEW **BLE2D400-S** | SGD338 |

## Connection Cables

| Length | Product Name | List Price |
|---|---|---|
| 0.5 m | **CC005HBL□** | SGD38 |
| 1 m | **CC010HBL□** | SGD38 |
| 1.5 m | **CC015HBL□** | SGD43 |
| 2 m | **CC020HBL□** | SGD48 |
| 2.5 m | **CC025HBL□** | SGD56 |
| 3 m | **CC030HBL□** | SGD66 |

| Length | Product Name | List Price |
|---|---|---|
| 4 m | **CC040HBL□** | SGD78 |
| 5 m | **CC050HBL□** | SGD89 |
| 7 m | **CC070HBL□** | SGD110 |
| 10 m | **CC100HBL□** | SGD139 |
| 15 m | **CC150HBL□** | SGD194 |
| 20 m | **CC200HBL□** | SGD246 |

- The □ symbol in the product is replaced with **F** or **B** that represents the cable drawing direction.

Two types of connection cables for different cable drawing directions are provided.

Note

- The cable for the round shaft type draws only from the counter-output shaft side.

**F**: Drawing on the output shaft side **B**: Drawing on the counter-output shaft side

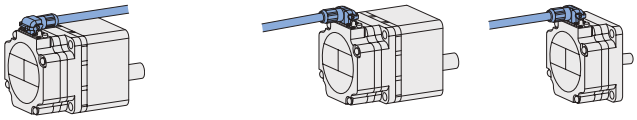

# Accessories

## Motor

| Type | Parallel Key | Safety Cover | Installation Screws | Operating Manual |
|---|---|---|---|---|
| **GFV** Gear | 1 piece | – | 1 set | 1 copy |
| **JV** Gear | – | – | – | |
| **JB** Gear | – | – | – | |
| **JH** Gear | 1 piece | 1 piece | 1 set | |
| Round Shaft | – | – | – | |

## Driver

| Startup Guide | Operating Manual |
|---|---|
| 1 copy | 1 copy |

# Parallel Shaft Gearhead **GFV** Gear 30 W, 60 W, 120 W

## Specifications

| Product Name | | | BLM230HP-□S / BLM230HP-□SF | | BLM460SHP-□S / BLM460SHP-□SF | | BLM5120HP-□S / BLM5120HP-□SF | |
|---|---|---|---|---|---|---|---|---|
| | Driver | | BLE2D30-A | BLE2D30-C | BLE2D60-A | BLE2D60-C | BLE2D120-A | BLE2D120-C |
| Rated Output Power (Continuous) | | W | 30 | | 60 | | 120 | |
| Power Supply Input | Rated Voltage | VAC | Single-Phase 100-120 | Single-Phase 200-240/ Three-Phase 200-240 | Single-Phase 100-120 | Single-Phase 200-240/ Three-Phase 200-240 | Single-Phase 100-120 | Single-Phase 200-240/ Three-Phase 200-240 |
| | Permissible Voltage Range | | −15～+10% | | −15～+10% | | −15～+10% | |
| | Frequency | Hz | 50/60 | | 50/60 | | 50/60 | |
| | Permissible Frequency Range | | ±5% | | ±5% | | ±5% | |
| | Rated Input Current | A | 1.1 | Single-Phase: 0.67/Three-Phase: 0.39 | 1.7 | Single-Phase: 1.0/Three-Phase: 0.61 | 2.7 | Single-Phase: 1.7/Three-Phase: 1.02 |
| | Maximum Input Current | A | 3.3 | Single-Phase: 2.2/Three-Phase: 1.2 | 5.4 | Single-Phase: 3.5/Three-Phase: 2.0 | 7.4 | Single-Phase: 4.8/Three-Phase: 3.3 |
| Rated Speed | | r/min | 3000 | | | | | |
| Speed Control Range | | | 80～4000 r/min (Speed ratio 1:50) | | | | | |
| Speed Regulation* | Load | | ±0.2% (±0.5%) or less: Conditions 0 to rated torque, rated speed, rated voltage, normal temperature | | | | | |
| | Voltage | | ±0.2% (±0.5%) or less: Conditions Rated voltage −15～+10%, rated speed, no load, normal temperature | | | | | |
| | Temperature | | ±0.2% (±0.5%) or less: Conditions Operating ambient temperature 0～+50°C, rated speed, no load, rated voltage | | | | | |

*( ) The number in the parentheses is the specified value for the analog setting.

●The values correspond to each specification and characteristic of a stand-alone motor.

| Gear Ratio | | | | 5 | 10 | 15 | 20 | 30 | 50 | 100 | 200 |
|---|---|---|---|---|---|---|---|---|---|---|---|
| Rotation Direction | | | | Same direction as the motor | | | | Opposite direction to the motor | | | Same direction as the motor |
| Output Shaft Rotation Speed [r/min]*1 | | | 80 r/min | 16 | 8 | 5.3 | 4 | 2.7 | 1.6 | 0.8 | 0.4 |
| | | | 4000 r/min | 800 | 400 | 267 | 200 | 133 | 80 | 40 | 20 |
| Permissible Torque [N·m] | | 30 W | At 80～2500 r/min | 0.54 | 1.1 | 1.6 | 2.2 | 3.1 | 5.2 | 6 | 6 |
| | | | At 3000 r/min | 0.43 | 0.86 | 1.3 | 1.7 | 2.5 | 4.1 | 6 | 6 |
| | | | At 4000 r/min | 0.32 | 0.65 | 0.97 | 1.3 | 1.9 | 3.1 | 5.4 | 5.4 |
| | | 60 W | At 80～2000 r/min | 0.9 | 1.8 | 2.7 | 3.6 | 5.2 | 8.6 | 16 | 16 |
| | | | At 3000 r/min | 0.86 | 1.7 | 2.6 | 3.4 | 4.9 | 8.2 | 16 | 16 |
| | | | At 4000 r/min | 0.65 | 1.3 | 1.9 | 2.6 | 3.7 | 6.2 | 12.4 | 14 |
| | | 120 W | At 80～2000 r/min | 2.0 | 4.1 | 6.1 | 8.1 | 11.6 | 19.4 | 30 | 30 |
| | | | At 3000 r/min | 1.7 | 3.4 | 5.2 | 6.9 | 9.9 | 16.4 | 30 | 30 |
| | | | At 4000 r/min | 1.3 | 2.6 | 3.9 | 5.2 | 7.4 | 12.3 | 24.7 | 27 |
| Permissible Radial Load [N] | 10 mm from output shaft end*2 | 30 W | At 80～3000 r/min | 100 | 150 | | | 200 | | | |
| | | | At 4000 r/min | 90 | 130 | | | 180 | | | |
| | | 60 W | At 80～3000 r/min | 200 | 300 | | | 450 | | | |
| | | | At 4000 r/min | 180 | 270 | | | 420 | | | |
| | | 120 W | At 80～3000 r/min | 300 | 400 | | | 500 | | | |
| | | | At 4000 r/min | 230 | 370 | | | 450 | | | |
| | 20 mm from output shaft end*2 | 30 W | At 80～3000 r/min | 150 | 200 | | | 300 | | | |
| | | | At 4000 r/min | 110 | 170 | | | 230 | | | |
| | | 60 W | At 80～3000 r/min | 250 | 350 | | | 550 | | | |
| | | | At 4000 r/min | 220 | 330 | | | 500 | | | |
| | | 120 W | At 80～3000 r/min | 400 | 500 | | | 650 | | | |
| | | | At 4000 r/min | 300 | 430 | | | 550 | | | |
| Permissible Axial Load [N] | | 30 W | | 40 | | | | | | | |
| | | 60 W | | 100 | | | | | | | |
| | | 120 W | | 150 | | | | | | | |
| Permissible Load Inertia J [×10$^{-4}$kg·m$^2$] | | 30 W | | 12 | 50 | 110 | 200 | 370 | 920 | 2500 | 5000 |
| | | 60 W | | 22 | 95 | 220 | 350 | 800 | 2200 | 6200 | 12000 |
| | | 120 W | | 45 | 190 | 420 | 700 | 1600 | 4500 | 12000 | 25000 |
| | At instantaneous stop, instantaneous bi-directional operation*3 | 30 W | | 1.55 | 6.2 | 14 | 24.8 | 55.8 | 155 | | |
| | | 60 W | | 5.5 | 22 | 49.5 | 88 | 198 | 550 | | |
| | | 120 W | | 25 | 100 | 225 | 400 | 900 | 2500 | | |

*1 The rotational speed of the output shaft is the value of the rotational speed divided by the gear ratio.

*2 About Load Position ➜ Page 05-15

*3 It is also applicable when digitally setting the deceleration time to below 0.1 second.

## Speed – Torque Characteristics

Continuous Duty Region: Continuous operation is possible in this region.
Limited Duty Region: This region is used primarily when accelerating.

### ●30 W

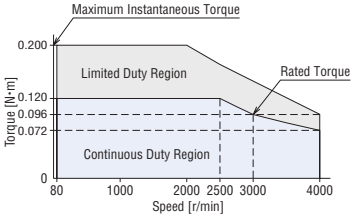


### ●60 W

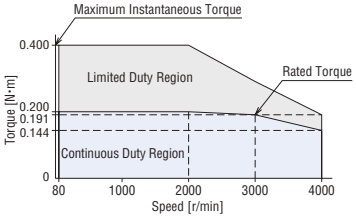


### ●120 W

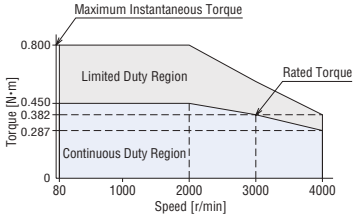


●The values correspond to each specification and characteristic of a stand-alone motor. The speed-torque characteristics shows the values when rated voltage is applied.

●A number in the box □ in the product name indicates the gear ratio.

# Parallel Shaft Gearhead GFV Gear 200 W, 400 W

## Specifications

| Product Name | | | BLM6200SHP-□S | BLM6400SHP-□S |
|---|---|---|---|---|
| | Driver | | BLE2D200-C | BLE2D400-S |
| Rated Output Power (Continuous) | | W | 200 | 400 |
| Power Supply Input | Rated Voltage | VAC | Single-Phase 200-240/Three-Phase 200-240 | Three-Phase 200-240 |
| | Permissible Voltage Range | | −15～+10% | −15～+10% |
| | Frequency | Hz | 50/60 | 50/60 |
| | Permissible Frequency Range | | ±5% | ±5% |
| | Rated Input Current | A | Single-Phase: 2.4/Three-Phase: 1.4 | 2.3 |
| | Maximum Input Current | A | Single-Phase: 6.5/Three-Phase: 4.3 | 6.1 |
| Rated Speed | | r/min | 3000 | |
| Speed Control Range | | | 80～4000 r/min (Speed ratio 1:50) | |
| Speed Regulation*2 | Load | | ±0.2% (±0.5%) or less: Conditions | 0 to rated torque, rated speed, rated voltage, normal temperature |
| | Voltage | | ±0.2% (±0.5%) or less: Conditions | Rated voltage −15～+10%, rated speed, no load, normal temperature |
| | Temperature | | ±0.2% (±0.5%) or less: Conditions | Operating ambient temperature 0～+50°C, rated speed, no load, rated voltage |

*1 400 W type: The certification of the UL/CSA standards has been applied for. For details, refer to the Oriental Motor website.
*2 ( ) The number in the parentheses is the specified value for the analog setting.
● The values correspond to each specification and characteristic of a stand-alone motor.

| Gear Ratio | | | 5 | 10 | 15 | 20 | 30 | 50 | 100*1 | 200*1 |
|---|---|---|---|---|---|---|---|---|---|---|
| Rotation Direction | | | Same direction as the motor | | | | Opposite direction to the motor | | Same direction as the motor | |
| Output Shaft Rotation Speed [r/min]*2 | | 80 r/min | 16 | 8 | 5.3 | 4 | 2.7 | 1.6 | 0.8 | 0.4 |
| | | 4000 r/min | 800 | 400 | 267 | 200 | 133 | 80 | 40 | 20 |
| Permissible Torque [N·m] | 200 W | At 80～3000 r/min | 2.9 | 5.7 | 8.6 | 11.5 | 16.4 | 27.4 | 51.6 | 70 |
| | | At 4000 r/min | 2.2 | 4.3 | 6.5 | 8.6 | 12.4 | 20.6 | 38.9 | 63 |
| | 400 W | At 80～3000 r/min | 5.7 | 11.4 | 17.1 | 22.9 | 32.8 | 54.6 | — | — |
| | | At 4000 r/min | 4.3 | 8.6 | 12.9 | 17.2 | 24.6 | 41.1 | — | — |
| Permissible Radial Load [N] | 10 mm from output shaft end | At 80～3000 r/min | 550 | | | | 1000 | | 1400 | |
| | | At 4000 r/min | 500 | | | | 900 | | 1200 | |
| | 20 mm from output shaft end | At 80～3000 r/min | 800 | | | | 1250 | | 1700 | |
| | | At 4000 r/min | 700 | | | | 1100 | | 1400 | |
| Permissible Axial Load [N] | | | 200 | | | | 300 | | 400 | |
| Permissible Load Inertia J [×10$^{-4}$kg·m$^2$] | | | 100 | 460 | 1000 | 1700 | 3900 | 9300 | 18000 | 37000 |
| | At instantaneous stop, instantaneous bi-directional operation*3 | | 50 | 200 | 450 | 800 | 1800 | 5000 | | |

*1 For 200 W output only.
*2 The rotational speed of the output shaft is the value of the rotational speed divided by the gear ratio.
*3 It is also applicable when digitally setting the deceleration time to below 0.1 second.

### ◇About Load Position

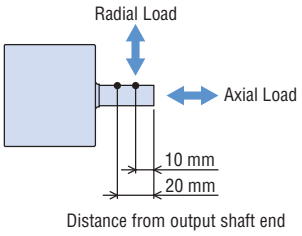


## Speed – Torque Characteristics

Continuous Duty Region: Continuous operation is possible in this region.
Limited Duty Region: This region is used primarily when accelerating.

### ●200 W

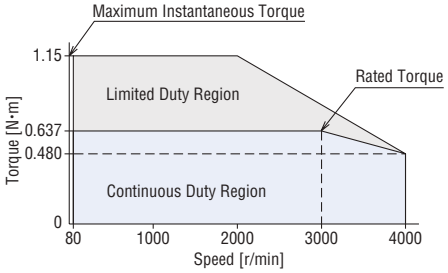


### ●400 W

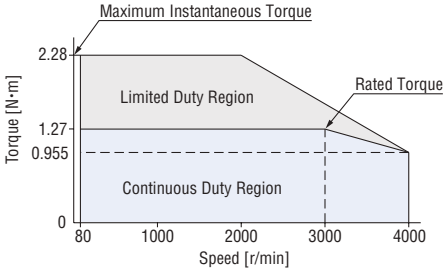


● The values correspond to each specification and characteristic of a stand-alone motor. The speed-torque characteristics shows the values when rated voltage is applied.

● A number in the box □ in the product name indicates the gear ratio.

# Parallel Shaft Gearhead JV Gear 200 W

## Specifications

| | | | | |
|---|---|---|---|---|
| Product Name | Motor | | BLM5200HPK-5KV□S | |
| | Driver | | BLE2D200-C | |
| Rated Output Power (Continuous) | | W | 200 | |
| Power Supply Input | Rated Voltage | VAC | Single-Phase 200-240/Three-Phase 200-240 | |
| | Permissible Voltage Range | | −15～+10% | |
| | Frequency | Hz | 50/60 | |
| | Permissible Frequency Range | | ±5% | |
| | Rated Input Current | A | Single-Phase: 2.4/Three-Phase: 1.4 | |
| | Maximum Input Current | A | Single-Phase: 6.5/Three-Phase: 4.3 | |
| Rated Speed | | r/min | 3000 | |
| Speed Control Range | | | 80～3600 r/min (Speed ratio 1:45) | |
| Speed Regulation* | Load | | ±0.2% (±0.5%) or less: Conditions | 0 to rated torque, rated speed, rated voltage, normal temperature |
| | Voltage | | ±0.2% (±0.5%) or less: Conditions | Rated voltage −15～+10%, rated speed, no load, normal temperature |
| | Temperature | | ±0.2% (±0.5%) or less: Conditions | Operating ambient temperature 0～+50°C, rated speed, no load, rated voltage |

*( ) The number in the parentheses is the specified value for the analog setting.

●The values correspond to each specification and characteristic of a stand-alone motor.

| Gear Ratio | | | 300 | 450 |
|---|---|---|---|---|
| (Actual gear ratio) | | | (300.5) | (450.8) |
| Rotation Direction | | | Same direction as the motor | |
| Output Shaft Rotation Speed [r/min]*1 | | 80 r/min | 0.27 | 0.18 |
| | | 3600 r/min | 12 | 8 |
| Permissible Torque [N·m] | | At 80～3000 r/min | 132 | 198 |
| | | At 3600 r/min | 92.3 | 138 |
| Permissible Radial Load [N] | 10 mm from output shaft end | At 80～1500 r/min | 4461 | |
| | | At 3000 r/min | 3123 | |
| | | At 3600 r/min | 2231 | |
| | 20 mm from output shaft end | At 80～1500 r/min | 5174 | |
| | | At 3000 r/min | 3622 | |
| | | At 3600 r/min | 2587 | |
| Permissible Axial Load [N] | | At 80～1500 r/min | 686 | |
| | | At 3000 r/min | 480 | |
| | | At 3600 r/min | 343 | |
| Permissible Load Inertia J [×10$^{-4}$kg·m$^2$] | | At 80～1500 r/min | 900000 | 2025000 |
| | | At 3000 r/min | 324000 | 729000 |
| | | At 3600 r/min | 182250 | 410063 |
| | At instantaneous stop, instantaneous bi-directional operation*2 | At 80～1500 r/min | 300000 | 675000 |
| | | At 3000 r/min | 108000 | 243000 |
| | | At 3600 r/min | 60750 | 136688 |

*1 The rotational speed of the output shaft is the value of the rotational speed divided by the gear ratio.

*2 It is also applicable when digitally setting the deceleration time to below 0.1 second.

### ◇About Load Position

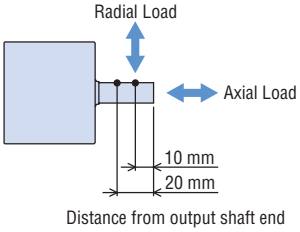


## Speed – Torque Characteristics

Continuous Duty Region: Continuous operation is possible in this region.
Limited Duty Region: This region is used primarily when accelerating.

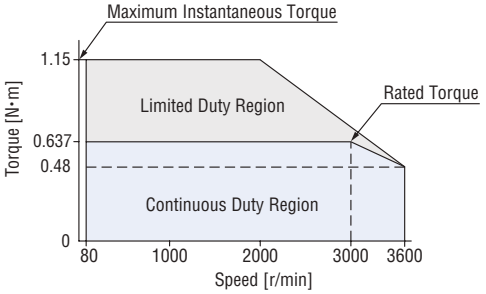


●The values correspond to each specification and characteristic of a stand-alone motor. The speed-torque characteristics shows the values when rated voltage is applied.

●A number in the box □ in the product name indicates the gear ratio.

# Legged Gearhead JB Gear 200 W

## Specifications

| Product Name | | | BLM5200HPK-5□B□B-L |
|---|---|---|---|
| | Driver | | BLE2D200-C |
| Rated Output Power (Continuous) | | W | 200 |
| Power Supply Input | Rated Voltage | VAC | Single-Phase 200-240/Three-Phase 200-240 |
| | Permissible Voltage Range | | −15～+10% |
| | Frequency | Hz | 50/60 |
| | Permissible Frequency Range | | ±5% |
| | Rated Input Current | A | Single-Phase: 2.4/Three-Phase: 1.4 |
| | Maximum Input Current | A | Single-Phase: 6.5/Three-Phase: 4.3 |
| Rated Speed | | r/min | 3000 |
| Speed Control Range | | | 80～3600 r/min (Speed ratio 1:45) |
| Speed Regulation* | Load | | ±0.2% (±0.5%) or less: Conditions 0 to rated torque, rated speed, rated voltage, normal temperature |
| | Voltage | | ±0.2% (±0.5%) or less: Conditions Rated voltage −15～+10%, rated speed, no load, normal temperature |
| | Temperature | | ±0.2% (±0.5%) or less: Conditions Operating ambient temperature 0～+50°C, rated speed, no load, rated voltage |

*( ) The number in the parentheses is the specified value for the analog setting.

●The values correspond to each specification and characteristic of a stand-alone motor.

| Gear Ratio | | | 5 | 10 | 20 | 30 | 50 | 100 | 200 | 300 | 450 | 600 | 1200 |
|---|---|---|---|---|---|---|---|---|---|---|---|---|---|
| (Actual gear ratio) | | | (4.97) | (10.12) | (20.08) | (30.86) | (49.09) | (104.1) | (196.4) | (300.5) | (450.8) | (588.9) | (1178) |
| Gearhead Size Code | | | A | | | C | | E | | K | | S | |
| Rotation Direction | | | Same direction as the motor | | | | Opposite direction to the motor | | | Same direction as the motor | | | |
| Output Shaft Rotation Speed [r/min]*1 | | 80 r/min | 16 | 8 | 4 | 2.7 | 1.6 | 0.8 | 0.4 | 0.27 | 0.18 | 0.13 | 0.07 |
| | | 3600 r/min | 720 | 360 | 180 | 120 | 72 | 36 | 18 | 12 | 8 | 6 | 3 |
| Permissible Torque [N·m] | | At 80～3000 r/min | 2.4 | 4.9 | 9.7 | 13.0 | 22.5 | 48.4 | 91.3 | 132 | 198 | 259 | 518 |
| | | At 3600 r/min | 1.7 | 3.4 | 6.8 | 8.2 | 15.6 | 32.0 | 60.3 | 92.3 | 138 | 181 | 362 |
| Permissible Radial Load [N] | 10 mm from output shaft end | At 80～1500 r/min | 521 | 977 | 1243 | 1824 | 2032 | 2888 | 3483 | 4461 | | 5245 | |
| | | At 3000 r/min | 365 | 684 | 870 | 1277 | 1422 | 2022 | 2438 | 3123 | | 3672 | |
| | | At 3600 r/min | 261 | 489 | 622 | 912 | 1016 | 1444 | 1742 | 2231 | | 2623 | |
| | 20 mm from output shaft end | At 80～1500 r/min | 663 | 1244 | 1582 | 2280 | 2540 | 3496 | 4216 | 5174 | | 5921 | |
| | | At 3000 r/min | 464 | 871 | 1107 | 1596 | 1778 | 2447 | 2951 | 3622 | | 4145 | |
| | | At 3600 r/min | 332 | 622 | 791 | 1140 | 1270 | 1748 | 2108 | 2587 | | 2961 | |
| Permissible Axial Load [N] | | At 80～1500 r/min | 39 | 88 | 177 | 255 | 275 | 422 | 461 | 686 | | 824 | |
| | | At 3000 r/min | 27.3 | 61.6 | 124 | 179 | 193 | 295 | 323 | 480 | | 577 | |
| | | At 3600 r/min | 19.5 | 44 | 88.5 | 128 | 138 | 211 | 231 | 343 | | 412 | |
| Permissible Load Inertia J [×10$^{-4}$kg·m$^2$] | | At 80～1500 r/min | 250 | 1000 | 4000 | 9000 | 25000 | 100000 | 400000 | 900000 | 2025000 | 3600000 | 14400000 |
| | | At 3000 r/min | 90 | 360 | 1440 | 3240 | 9000 | 36000 | 144000 | 324000 | 729000 | 1296000 | 5184000 |
| | | At 3600 r/min | 50.6 | 203 | 810 | 1823 | 5063 | 20250 | 81000 | 182250 | 410063 | 729000 | 2916000 |
| | At instantaneous stop, instantaneous bi-directional operation*2 | At 80～1500 r/min | 83.3 | 333 | 1333 | 3000 | 8333 | 33333 | 133333 | 300000 | 675000 | 1200000 | 4800000 |
| | | At 3000 r/min | 30 | 120 | 480 | 1080 | 3000 | 12000 | 48000 | 108000 | 243000 | 432000 | 1728000 |
| | | At 3600 r/min | 16.9 | 67.5 | 270 | 608 | 1688 | 6750 | 27000 | 60750 | 136688 | 243000 | 972000 |

*1 The rotational speed of the output shaft is the value of the rotational speed divided by the gear ratio.

*2 It is also applicable when digitally setting the deceleration time to below 0.1 second.

◇About Load Position

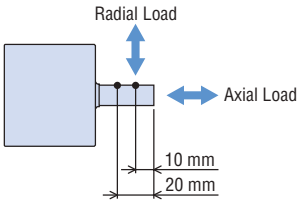


## Speed – Torque Characteristics

Continuous Duty Region: Continuous operation is possible in this region.
Limited Duty Region: This region is used primarily when accelerating.

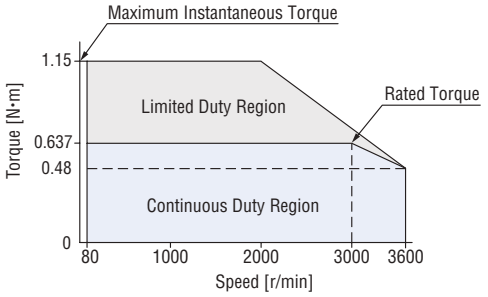


●The values correspond to each specification and characteristic of a stand-alone motor. The speed-torque characteristics shows the values when rated voltage is applied.

●The box ■ in a product name is replaced with the code (**A**, **C**, **E**, **K**, **S**) that represents the gearhead size.
A number in the box □ in the product name indicates the gear ratio.

# Hypoid Right-Angle Hollow Shaft JH Gear 60 W, 120 W

## Specifications

| Product Name | Motor | | BLM460SHPK-4H□S | | BLM5120HPK-5H□S | |
|---|---|---|---|---|---|---|
| | Driver | | BLE2D60-A | BLE2D60-C | BLE2D120-A | BLE2D120-C |
| Rated Output Power (Continuous) | | W | 60 | | 120 | |
| Power Supply Input | Rated Voltage | VAC | Single-Phase 100-120 | Single-Phase 200-240 / Three-Phase 200-240 | Single-Phase 100-120 | Single-Phase 200-240 / Three-Phase 200-240 |
| | Permissible Voltage Range | | −15～+10% | | −15～+10% | |
| | Frequency | Hz | 50/60 | | 50/60 | |
| | Permissible Frequency Range | | ±5% | | ±5% | |
| | Rated Input Current | A | 1.7 | Single-Phase: 1.0 / Three-Phase: 0.61 | 2.7 | Single-Phase: 1.7/Three-Phase: 1.02 |
| | Maximum Input Current | A | 5.4 | Single-Phase: 3.5 / Three-Phase: 2.0 | 7.4 | Single-Phase: 4.8/Three-Phase: 3.3 |
| Rated Speed | | r/min | 3000 | | | |
| Speed Control Range | | | 80～3600 r/min (Speed ratio 1:45) | | | |
| Speed Regulation* | Load | | ±0.2% (±0.5%) or less: Conditions | 0 to rated torque, rated speed, rated voltage, normal temperature | | |
| | Voltage | | ±0.2% (±0.5%) or less: Conditions | Rated voltage −15～+10%, rated speed, no load, normal temperature | | |
| | Temperature | | ±0.2% (±0.5%) or less: Conditions | Operating ambient temperature 0～+50℃, rated speed, no load, rated voltage | | |

*( ) The number in the parentheses is the specified value for the analog setting.

●The values correspond to each specification and characteristic of a stand-alone motor.

| Gear Ratio | | | | 10 | 15 | 20 | 30 | 50 | 100 | 200 |
|---|---|---|---|---|---|---|---|---|---|---|
| (Actual gear ratio) | | | | (10.25) | (15.38) | (20.50) | (30.75) | (51.25) | (102.5) | (205.0) |
| Rotation Direction*1 | | | | Same direction as the motor | | | | | Opposite direction to the motor | |
| Output Shaft Rotation Speed [r/min]*2 | | | 80 r/min | 8 | 5.3 | 4 | 2.7 | 1.6 | 0.8 | 0.4 |
| | | | 3600 r/min | 360 | 240 | 180 | 120 | 72 | 36 | 18 |
| Permissible Torque [N·m] | | 60 W | At 80～1500 r/min | 1.2 | 1.8 | 2.7 | 4.0 | 6.7 | 13.3 | 20.6 |
| | | | At 3000 r/min | 1.2 | 1.8 | 2.5 | 3.8 | 6.4 | 12.7 | 15.6 |
| | | | At 3600 r/min | 0.74 | 1.1 | 1.8 | 2.7 | 4.4 | 8.9 | 11.5 |
| | | 120 W | At 80～1500 r/min | 3.2 | 4.8 | 6.5 | 9.7 | 16.0 | 32.3 | 53.9 |
| | | | At 3000 r/min | 2.5 | 3.8 | 5.1 | 7.6 | 12.7 | 25.5 | 41.0 |
| | | | At 3600 r/min | 1.8 | 2.6 | 3.5 | 5.3 | 8.8 | 17.7 | 30.2 |
| Permissible Radial Load [N]*3 | 20 mm from installation surface | 60 W | At 80～1500 r/min | 265 | 341 | 417 | 531 | 682 | 758 | 836 |
| | | | At 3000 r/min | 201 | 259 | 317 | 404 | 518 | 576 | 635 |
| | | | At 3600 r/min | 148 | 191 | 234 | 297 | 382 | 424 | 468 |
| | | 120 W | At 80～1500 r/min | 363 | 484 | 605 | 806 | 971 | 1045 | 1127 |
| | | | At 3000 r/min | 276 | 368 | 460 | 613 | 738 | 794 | 857 |
| | | | At 3600 r/min | 203 | 271 | 339 | 451 | 544 | 585 | 631 |
| Permissible Axial Load [N] | | 60 W | At 80～1500 r/min | 88 | 108 | 137 | 177 | 226 | 245 | 275 |
| | | | At 3000 r/min | 67 | 82 | 104 | 135 | 172 | 186 | 209 |
| | | | At 3600 r/min | 49 | 60 | 77 | 99 | 127 | 137 | 154 |
| | | 120 W | At 80～1500 r/min | 108 | 147 | 186 | 245 | 294 | 324 | 343 |
| | | | At 3000 r/min | 82 | 112 | 141 | 186 | 223 | 246 | 261 |
| | | | At 3600 r/min | 60 | 82 | 104 | 137 | 165 | 181 | 192 |
| Permissible Load Inertia J [×10$^{-4}$kg·m$^2$] | | 60 W | At 80～1500 r/min | 100 | 225 | 400 | 900 | 2500 | 10000 | 40000 |
| | | | At 3000 r/min | 36 | 81 | 144 | 324 | 900 | 3600 | 14400 |
| | | | At 3600 r/min | 20.3 | 45.6 | 81 | 182 | 506 | 2025 | 8100 |
| | | 120 W | At 80～1500 r/min | 200 | 450 | 800 | 1800 | 5000 | 20000 | 80000 |
| | | | At 3000 r/min | 72 | 162 | 288 | 648 | 1800 | 7200 | 28800 |
| | | | At 3600 r/min | 40.5 | 91.1 | 162 | 365 | 1013 | 4050 | 16200 |
| | At instantaneous stop, instantaneous bi-directional operation*4 | 60 W | At 80～1500 r/min | 33.3 | 75 | 133 | 300 | 833 | 3333 | 13333 |
| | | | At 3000 r/min | 12 | 27 | 48 | 108 | 300 | 1200 | 4800 |
| | | | At 3600 r/min | 6.8 | 15.2 | 27 | 60.8 | 169 | 675 | 2700 |
| | | 120 W | At 80～1500 r/min | 66.7 | 150 | 267 | 600 | 1667 | 6667 | 26667 |
| | | | At 3000 r/min | 24 | 54 | 96 | 216 | 600 | 2400 | 9600 |
| | | | At 3600 r/min | 13.5 | 30.4 | 54 | 122 | 338 | 1350 | 5400 |

*1 The rotational direction is viewed from the gear flange surface (Figure on the right).

*2 The rotational speed of the output shaft is the value of the rotational speed divided by the gear ratio.

*3 The radial load at each distance can also be calculated with a formula. ➜ Page 05-42

*4 It is also applicable when digitally setting the deceleration time to below 0.1 second.

### ◇Gear Flange Position

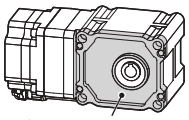

Gear flange

### ◇About Load Position

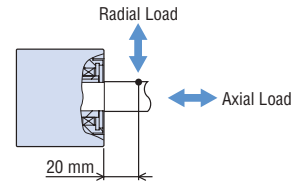


●A number in the box □ in the product name indicates the gear ratio.

## Speed – Torque Characteristics

Continuous Duty Region: Continuous operation is possible in this region.
Limited Duty Region: This region is used primarily when accelerating.

### 60 W

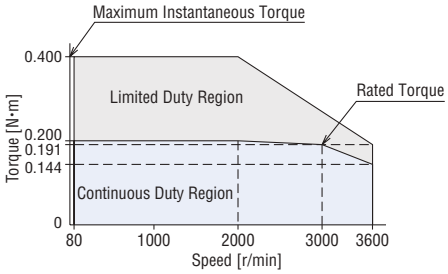


### 120 W

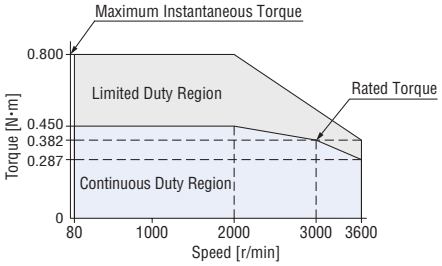


The values correspond to each specification and characteristic of a stand-alone motor. The speed-torque characteristics shows the values when rated voltage is applied.

# Hypoid Right-Angle Hollow Shaft JH Gear 200 W

## Specifications

| | | | |
|---|---|---|---|
| Product Name | Motor | | BLM5200HPK-5□H□S |
| | Driver | | BLE2D200-C |
| Rated Output Power (Continuous) | | W | 200 |
| Power Supply Input | Rated Voltage | VAC | Single-Phase 200-240/Three-Phase 200-240 |
| | Permissible Voltage Range | | −15～+10% |
| | Frequency | Hz | 50/60 |
| | Permissible Frequency Range | | ±5% |
| | Rated Input Current | A | Single-Phase: 2.4/Three-Phase: 1.4 |
| | Maximum Input Current | A | Single-Phase: 6.5/Three-Phase: 4.3 |
| Rated Speed | | r/min | 3000 |
| Speed Control Range | | | 80～3600 r/min (Speed ratio 1:45) |
| Speed Regulation* | Load | | ±0.2% (±0.5%) or less: Conditions 0 to rated torque, rated speed, rated voltage, normal temperature |
| | Voltage | | ±0.2% (±0.5%) or less: Conditions Rated voltage −15～+10%, rated speed, no load, normal temperature |
| | Temperature | | ±0.2% (±0.5%) or less: Conditions Operating ambient temperature 0～+50°C, rated speed, no load, rated voltage |

*( ) The number in the parentheses is the specified value for the analog setting.

●The values correspond to each specification and characteristic of a stand-alone motor.

| Gear Ratio | | | 5 | 10 | 15 | 20 | 30 | 50 | 100 | 200 |
|---|---|---|---|---|---|---|---|---|---|---|
| (Actual gear ratio) | | | (5) | (10) | (15) | (20) | (30) | (50) | (98.95) | (200) |
| Gearhead Size Code | | | X | | | | | | Y | |
| Rotation Direction*1 | | | Same direction as the motor | | | | | | Opposite direction to the motor | |
| Output Shaft Rotation Speed [r/min]*2 | | 80 r/min | 16 | 8 | 5.3 | 4 | 2.7 | 1.6 | 0.8 | 0.4 |
| | | 3600 r/min | 720 | 360 | 240 | 180 | 120 | 72 | 36 | 18 |
| Permissible Torque [N·m] | | At 80～3000 r/min | 2.1 | 4.1 | 6.2 | 8.3 | 13.4 | 22.3 | 41.0 | 82.8 |
| | | At 3600 r/min | 1.3 | 2.6 | 4.0 | 5.3 | 9.4 | 15.6 | 28.5 | 57.6 |
| Permissible Radial Load [N]*3 | 20 mm from installation surface | At 80～1500 r/min | 1346 | 1663 | 1882 | 2035 | 2309 | 2681 | 3436 | |
| | | At 3000 r/min | 942 | 1164 | 1317 | 1425 | 1616 | 1877 | 2405 | |
| | | At 3600 r/min | 673 | 832 | 941 | 1018 | 1155 | 1341 | 1718 | |
| Permissible Axial Load [N] | | At 80～1500 r/min | 307 | 380 | 429 | 466 | 527 | 613 | 785 | |
| | | At 3000 r/min | 215 | 266 | 300 | 326 | 369 | 429 | 550 | |
| | | At 3600 r/min | 154 | 190 | 215 | 233 | 264 | 307 | 393 | |
| Permissible Load Inertia J [×10$^{-4}$kg·m$^2$] | | At 80～1500 r/min | 250 | 1000 | 2250 | 4000 | 9000 | 25000 | 100000 | 400000 |
| | | At 3000 r/min | 90 | 360 | 810 | 1440 | 3240 | 9000 | 36000 | 144000 |
| | | At 3600 r/min | 50.6 | 203 | 456 | 810 | 1823 | 5063 | 20250 | 81000 |
| | At instantaneous stop, instantaneous bi-directional operation*4 | At 80～1500 r/min | 83.3 | 333 | 750 | 1333 | 3000 | 8333 | 33333 | 133333 |
| | | At 3000 r/min | 30 | 120 | 270 | 480 | 1080 | 3000 | 12000 | 48000 |
| | | At 3600 r/min | 16.9 | 67.5 | 152 | 270 | 608 | 1688 | 6750 | 27000 |

*1 The rotational direction is viewed from the gear flange side (Figure on the right).

*2 The rotational speed of the output shaft is the value of the rotational speed divided by the gear ratio.

*3 The radial load at each distance can also be calculated with a formula. ➜ Page 05-42

*4 It is also applicable when digitally setting the deceleration time to below 0.1 second.

◇Gear Flange Position

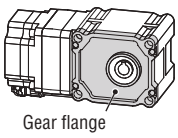


◇About Load Position

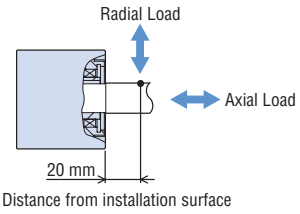


## Speed – Torque Characteristics

Continuous Duty Region: Continuous operation is possible in this region.
Limited Duty Region: This region is used primarily when accelerating.

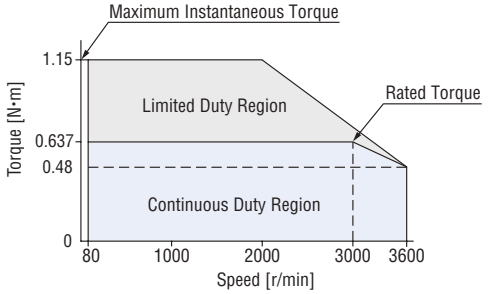


●The values correspond to each specification and characteristic of a stand-alone motor. The speed-torque characteristics shows the values when rated voltage is applied.

●The box ■ in a product name is replaced with the code (**X**, **Y**) that represents the gearhead size.
A number in the box □ in the product name indicates the gear ratio.

# Round Shaft 30 W, 60 W, 120 W

## Specifications

| Product Name | | | BLM230HP-AS | | BLM260HP-AS | | BLM5120HP-AS | |
|---|---|---|---|---|---|---|---|---|
| Motor / Driver | | | BLE2D30-A | BLE2D30-C | BLE2D60-A | BLE2D60-C | BLE2D120-A | BLE2D120-C |
| Rated Output Power (Continuous) | | W | 30 | | 60 | | 120 | |
| Power Supply Input | Rated Voltage | VAC | Single-Phase 100-120 | Single-Phase 200-240/ Three-Phase 200-240 | Single-Phase 100-120 | Single-Phase 200-240/ Three-Phase 200-240 | Single-Phase 100-120 | Single-Phase 200-240/ Three-Phase 200-240 |
| | Permissible Voltage Range | | −15～+10% | | −15～+10% | | −15～+10% | |
| | Frequency | Hz | 50/60 | | 50/60 | | 50/60 | |
| | Permissible Frequency Range | | ±5% | | ±5% | | ±5% | |
| | Rated Input Current | A | 1.1 | Single-Phase: 0.67/ Three-Phase: 0.39 | 1.7 | Single-Phase: 1.0/ Three-Phase: 0.61 | 2.7 | Single-Phase: 1.7/ Three-Phase: 1.02 |
| | Maximum Input Current | A | 3.3 | Single-Phase: 2.2/ Three-Phase: 1.2 | 5.4 | Single-Phase: 3.5/ Three-Phase: 2.0 | 7.4 | Single-Phase: 4.8/ Three-Phase: 3.3 |
| Rated Speed | | r/min | 3000 | | | | | |
| Speed Control Range | | | 80～4000 r/min (Speed ratio 1:50) | | | | | |
| Rated Torque | | N·m | 0.096 | | 0.191 | | 0.382 | |
| Maximum Instantaneous Torque | | N·m | 0.2 | | 0.4 | | 0.8 | |
| Permissible Radial Load | 10 mm from output shaft end | N | 80 | | 80 | | 150 | |
| | 20 mm from output shaft end | N | 100 | | 100 | | 170 | |
| Permissible Axial Load | | | Half of motor mass or less | | | | | |
| Rotor Inertia J | | $\times10^{-4}$kg·m$^2$ | 0.042 | | 0.082 | | 0.23 | |
| Permissible Load Inertia J | | $\times10^{-4}$kg·m$^2$ | 1.8 | | 3.75 | | 5.6 | |
| Speed Regulation* | Load | | ±0.2% (±0.5%) or less: Conditions 0 to rated torque, rated speed, rated voltage, normal temperature | | | | | |
| | Voltage | | ±0.2% (±0.5%) or less: Conditions Rated voltage −15～+10%, rated speed, no load, normal temperature | | | | | |
| | Temperature | | ±0.2% (±0.5%) or less: Conditions Operating ambient temperature 0～+50℃, rated speed, no load, rated voltage | | | | | |

*( ) The number in the parentheses is the specified value for the analog setting.

### ◇About Load Position

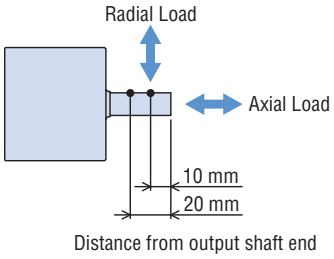


## Speed – Torque Characteristics

Continuous Duty Region: Continuous operation is possible in this region.
Limited Duty Region: This region is used primarily when accelerating.

### 30 W

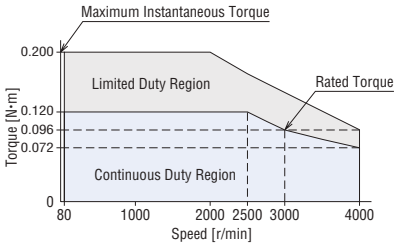


### 60 W

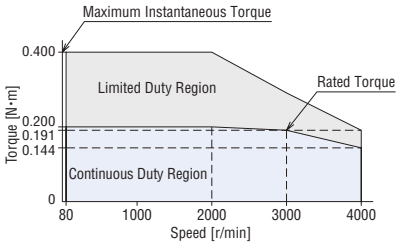


### 120 W

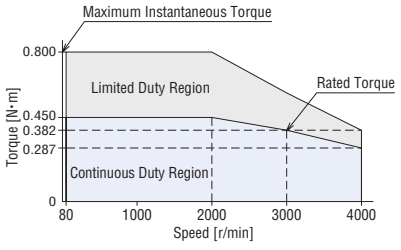


●The speed-torque characteristics shows the values when rated voltage is applied.

# Round Shaft 200 W, 400 W

## Specifications

| Product Name | | | BLM5200HP-AS | BLM5400HP-AS |
|---|---|---|---|---|
| | Driver | | BLE2D200-C | BLE2D400-S |
| Rated Output Power (Continuous) | | W | 200 | 400 |
| Power Supply Input | Rated Voltage | VAC | Single-Phase 200-240/Three-Phase 200-240 | Three-Phase 200-240 |
| | Permissible Voltage Range | | −15～+10% | −15～+10% |
| | Frequency | Hz | 50/60 | 50/60 |
| | Permissible Frequency Range | | ±5% | ±5% |
| | Rated Input Current | A | Single-Phase: 2.4/Three-Phase: 1.4 | 2.3 |
| | Maximum Input Current | A | Single-Phase: 6.5/Three-Phase: 4.3 | 6.1 |
| Rated Speed | | r/min | 3000 | |
| Speed Control Range | | | 80～4000 r/min (Speed ratio 1:50) | |
| Rated Torque | | N·m | 0.637 | 1.27 |
| Maximum Instantaneous Torque | | N·m | 1.15 | 2.28 |
| Permissible Radial Load | 10 mm from output shaft end | N | 150 | |
| | 20 mm from output shaft end | N | 170 | |
| Permissible Axial Load | | | Half of motor mass or less | |
| Rotor Inertia J | | $\times10^{-4}$kg·m$^2$ | 0.454 | 0.67 |
| Permissible Load Inertia J*2 | | $\times10^{-4}$kg·m$^2$ | 8.75 | 15 |
| Speed Regulation*3 | Load | | ±0.2% (±0.5%) or less: Conditions 0 to rated torque, rated speed, rated voltage, normal temperature | |
| | Voltage | | ±0.2% (±0.5%) or less: Conditions Rated voltage −15～+10%, rated speed, no load, normal temperature | |
| | Temperature | | ±0.2% (±0.5%) or less: Conditions Operating ambient temperature 0～+50°C, rated speed, no load, rated voltage | |

*1 400 W type: The certification of the UL/CSA standards has been applied for. For details, refer to the Oriental Motor website.

*2 When operating the round shaft 400 W type under inertial load, use an optional (separately sold) regeneration resistor **RGB100**. Regeneration Resistor ➜ Page 05-44

*3 ( ) The number in the parentheses is the specified value for the analog setting.

### ◇About Load Position

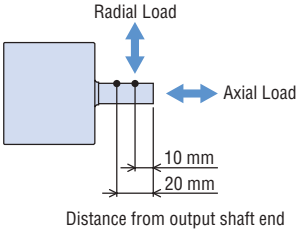


## Speed – Torque Characteristics

Continuous Duty Region: Continuous operation is possible in this region.
Limited Duty Region: This region is used primarily when accelerating.

### 200 W

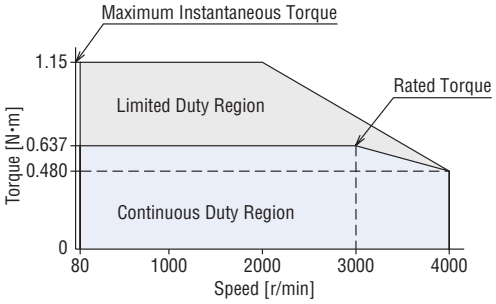


### 400 W

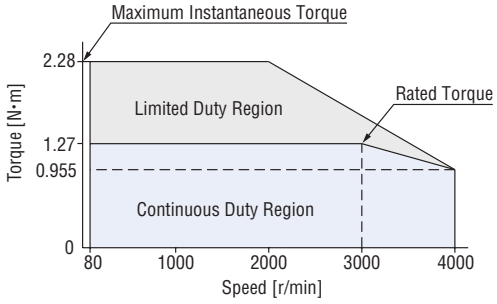


The speed-torque characteristics shows the values when rated voltage is applied.

## Common Specifications

| Items | | Specifications |
|---|---|---|
| Speed Setting Methods | Digital Setting | · Operating panel<br>· Support software **MEXE02** |
| | Analog Setting | · Setting by the external speed potentiometer **PAVR2-20K** (Sold separately): 0～20 kΩ, 0.05 W or more<br>· Setting by an external DC voltage: 0～10 VDC, 1 mA or more (Factory setting: 0～5 VDC) |
| Acceleration/Deceleration Time | Setting Range | 0.0～15.0 s (Factory setting: 0.5 s) |
| | Setting Method | · Operating panel<br>· Support software **MEXE02** |
| Torque Limit*1 | Setting Range | 0～300% (Factory setting: 300%) |
| | Digital Setting | · Operating panel<br>· Support software **MEXE02** |
| | Analog Setting | · Setting by the external speed potentiometer **PAVR2-20K** (Sold separately): 0～20 kΩ, 0.05 W or more<br>· Setting by an external DC voltage: 0～10 VDC, 1 mA or more (Factory setting: 0～5 VDC) |
| Number of Operation Data Settings | | Up to 16 points (Factory setting: 4 points) |
| Input Signals | | Photocoupler input Input resistance: 6.6 kΩ<br>Connectable external DC power supply: 24 VDC −15～+20% 100 mA or more<br>Sink input/Source input Supplied through external wiring |
| | | Signals can be assigned randomly to IN0～IN6 Input (7 points) [ ]: Initial setting<br>[FWD], [REV], [STOP-MODE], [M0], [M1], [ALARM-RESET], [Not used], M2, M3, H-FREE, TL, INFO-CLR, HMI,<br>EXT-ERROR, START/STOP*2, RUN/BRAKE*2, CW/CCW*2 |
| Output Signals | | Photocoupler and open collector output (Power ON: Up to 1.6 V)<br>External power supply: 4.5～30 VDC 100 mA or less (SPEED-OUT output, 5 mA or more)<br>Sink output/Source output Supplied through external wiring |
| | | Arbitrary signal assignment to OUT0, OUT1 (2 points) [ ]: Initial setting<br>[SPEED-OUT], [ALARM-OUT], MOVE, INFO, TLC, VA, DIR |
| Protective Functions | | When the following protective functions are activated, ALARM-OUT output turns OFF and the motor will undergo a coasting stop. At the same time, an alarm code displays with the ALARM LED blinking in red.<br>Overcurrent, main circuit overheating, overvoltage, undervoltage, sensor error, main circuit output error, overload, overspeed, EEPROM error, initial sensor error, initial operation inhibition, regeneration resistor overheat, external stop |
| Information | | When information occurs, the INFO output turns to ON and the ALARM LED blinking in orange. The motor keeps operating. |
| Maximum Extension Distance | | Motor and driver distance 20.5 m [When using an optional connection cable (for relay)] |
| Time Rating | | Continuous |

*1 Up to about ±10% of an error occurs between the set value and the generated torque (At rated torque and rated speed) due to the set speed, power supply voltage, and motor cable extension distance.
*2 This is available when 3-wire input method is selected.

## General Specifications

| Items | | Motor | Driver |
|---|---|---|---|
| Insulation Resistance | | The measured value is 100 MΩ or more when a 500 VDC megger is applied between the windings and the case after continuous operation under normal ambient temperature and humidity. | The measured value is 100 MΩ or more when 500 VDC megger is applied between the power supply terminal and the protective earth terminal, and between the power supply terminal and the I/O signal terminal after continuous operation under normal ambient temperature and humidity. |
| Dielectric Strength Voltage | | No abnormality is judged even with application of 1.5 kVAC at 50 Hz between the windings and the case for 1 minute after continuous operation under normal ambient temperature and humidity. | No abnormality is judged even with application of 1.5 kVAC at 50 Hz between the power supply terminal and the protective earth terminal, and with application of 1.5 kVAC at 50 Hz between the power supply terminal and the I/O signal terminal, for 1 minute after continuous operation under normal ambient temperature and humidity. |
| Temperature Rise | | Temperature rise of the windings is 50°C or less and that of the case is 40°C or less*1, measured by the thermocouple method after rated continuous operation under normal ambient temperature and humidity. | Temperature rise of the heat sink is 50°C or less measured by the thermocouple method after rated continuous operation under normal ambient temperature and humidity. |
| Operating Environment*2 | Ambient Temperature | 0～+40°C (Non-freezing) | 0～+50°C*3 (Non-freezing) |
| | Ambient Humidity | 85% or less (Non-condensing) | |
| | Altitude | Up to 1000 m above sea level | |
| | Atmosphere | No corrosive gases or dust. The product should not be exposed to oil. Cannot be used in a radioactive area, magnetic field, vacuum, or other special environments. | |
| | Vibration | Not subject to continuous vibration or excessive shock Conforms to JIS C 60068-2-6 "Sine-wave vibration test method"<br>Frequency range: 10～55 Hz, Pulsating amplitude: 0.15 mm Sweep direction: 3 directions (X, Y, Z) Number of sweeps: 20 times | |
| Storage Condition*4 | Ambient Temperature | −20～+70°C (−10～+60°C for **JV** Gear, **JB** Gear, **JH** Gear) (Non-freezing) | −25～+70°C (Non-freezing) |
| | Ambient Humidity | 85% or less (Non-condensing) | |
| | Altitude | Up to 3000 m above sea level (Up to 1000 m above sea level for **JV** Gear, **JB** Gear, **JH** Gear) | |
| | Atmosphere | No corrosive gases or dust. The product should not be exposed to water or oil. Cannot be used in a radioactive area, magnetic field, vacuum, or other special environments. | |
| Heat-resistant Class | | UL/CSA Standards: 105 (A), EN Standards: 120 (E) | – |
| Degree of Protection*5 | | **GFV** Gear, **JH** Gear, **JV** Gear, Round shaft: IP66<br>(Excluding the mounting surface of the round shaft type)<br>**JB** Gear: IP44 (Except the connector for driver connection when a cable is connected) | IP20 |

*1 For round shaft types, attach to a heat sink (material: aluminum) of one of the following sizes to keep the motor case surface temperature from exceeding 90°C.
30 W type: 115×115 mm Thickness 5 mm, 60 W type: 135×135 mm Thickness 5 mm
120 W type: 165×165 mm Thickness 5 mm, 200 W type: 200×200 mm Thickness 5 mm, 400 W type: 250×250 mm Thickness 6 mm
*2 Install the driver in the location that has the same heat radiation capability as an aluminum metal plate.
Unit installation 200×200 mm Thickness 2 mm, Contact installation 350×350 mm Thickness 2 mm
*3 For contact installation (200 W and 400 W only) and DIN rail installation, 0～+40°C.
*4 The storage condition applies to short periods such as the period during transportation.
*5 The IP indication representing the dust-proof and waterproof performances are defined in IEC 60529 and IEC 60034-5.

Note
● Do not measure insulation resistance or perform a dielectric strength test while the motor and driver are connected.

### Materials and Surface Treatment of IP66 Specifications (Motors/Gearheads)

- Materials Case: Aluminum, Output shaft: Stainless steel, Screw: Stainless steel (Externally exposed portion only, except for the protective earth terminal)
- Surface treatment Case: Coated (except for the installation surfaces of the **GFV** gears and round shaft types)

## Dimensions (Unit: mm)

- The dimensions drawing of the motor is an example where a separately sold connection cable ( ▭ portion in the figure) is connected.
  The described mass does not include the connection cable. Cable Dimensions and Mass ➜ Page 05-35
- "Installation screws" are included. Dimensions of installation screws ➜ Page 05-36
- A number in the box □ in the product name indicates the gear ratio.
  The ■ in a product name is replaced with the code that represents the gearhead size.

### Motors

#### ◇Parallel Shaft Gearhead **GFV** Gear・30 W

2D & 3D CAD

| Product Name | Motor Product Name | Gearhead Product Name | Gear Ratio | L | Mass kg | 2D CAD | |
|---|---|---|---|---|---|---|---|
| | | | | | | Connection cable drawing from the output shaft side is connected | Connection cable drawing from the counter-output shaft side is connected |
| **BLM230HP-□S**<br>**BLM230HP-□SF** | BLM230HP-GFV | GFV2G□S<br>GFV2G□SF | **5～20** | 34 | 0.63 | A1465A | A1466A |
| | | | **30～100** | 38 | 0.68 | A1465B | A1466B |
| | | | **200** | 43 | 0.73 | A1465C | A1466C |

**•When connecting the connection cable drawing from the output shaft side**

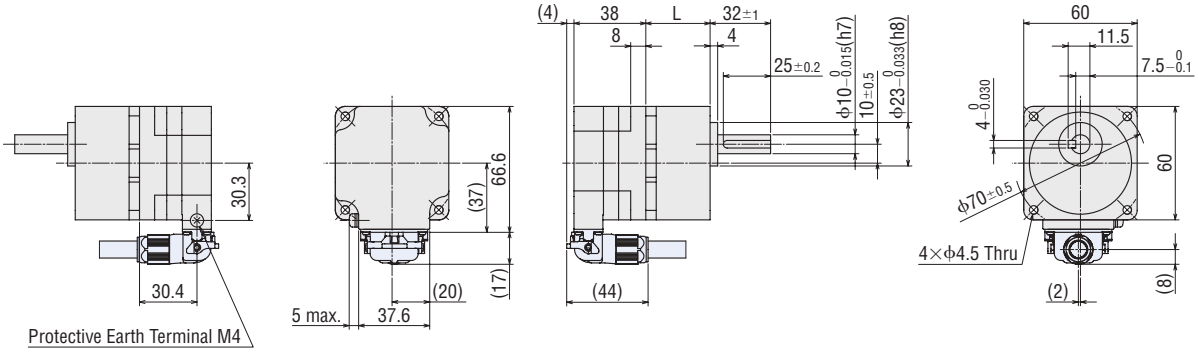


- At the time of shipment, the parallel key is fixed in the key slot of the gearhead shaft.

**•When connecting the connection cable drawing from the counter-output shaft side**

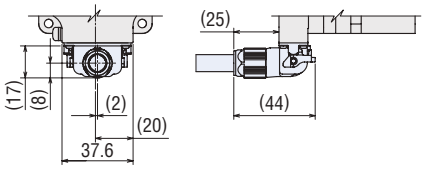


#### ◇Round Shaft Type・30 W

**BLM230HP-AS**

Mass: 0.35 kg

2D CAD A1475 3D CAD

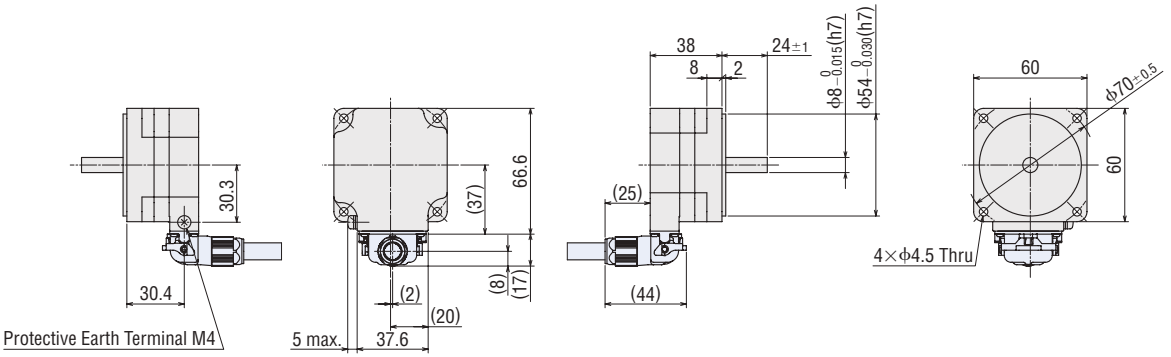

## ◇Parallel Shaft Gearhead **GFV** Gear・60 W

2D & 3D CAD

| Product Name | Motor Product Name | Gearhead Product Name | Gear Ratio | L | Mass kg | 2D CAD | |
|---|---|---|---|---|---|---|---|
| | | | | | | Connection cable drawing from the output shaft side is connected | Connection cable drawing from the counter-output shaft side is connected |
| **BLM460SHP-□S**<br>**BLM460SHP-□SF** | BLM460SHP-GFV | GFV4G□S<br>GFV4G□SF | **5～20** | 41 | 1.3 | A1467A | A1468A |
| | | | **30～100** | 46 | 1.4 | A1467B | A1468B |
| | | | **200** | 51 | 1.5 | A1467C | A1468C |

### •When connecting the connection cable drawing from the output shaft side

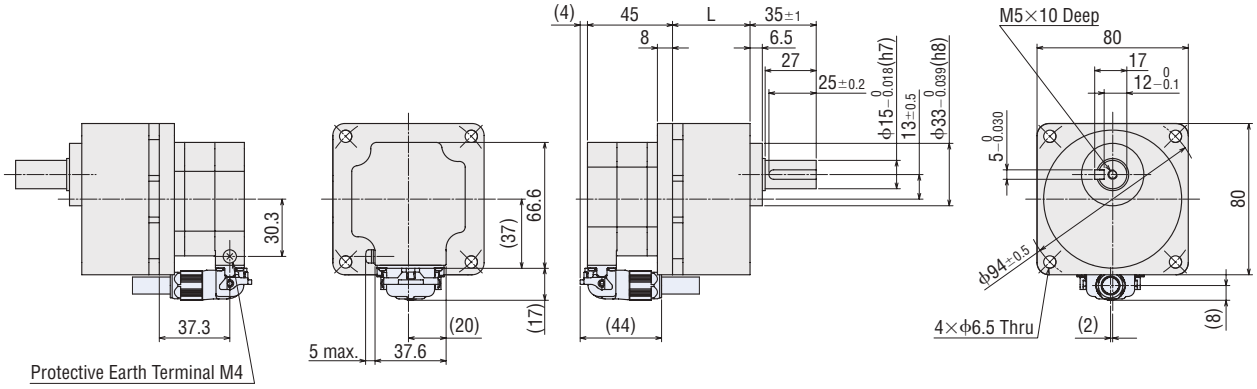


●At the time of shipment, the parallel key is fixed in the key slot of the gearhead shaft.

### •When connecting the connection cable drawing from the counter-output shaft side

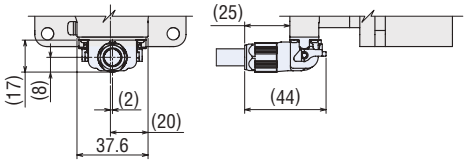


## ◇Round Shaft Type・60 W

**BLM260HP-AS**

Mass: 0.52 kg

2D CAD A1477 3D CAD

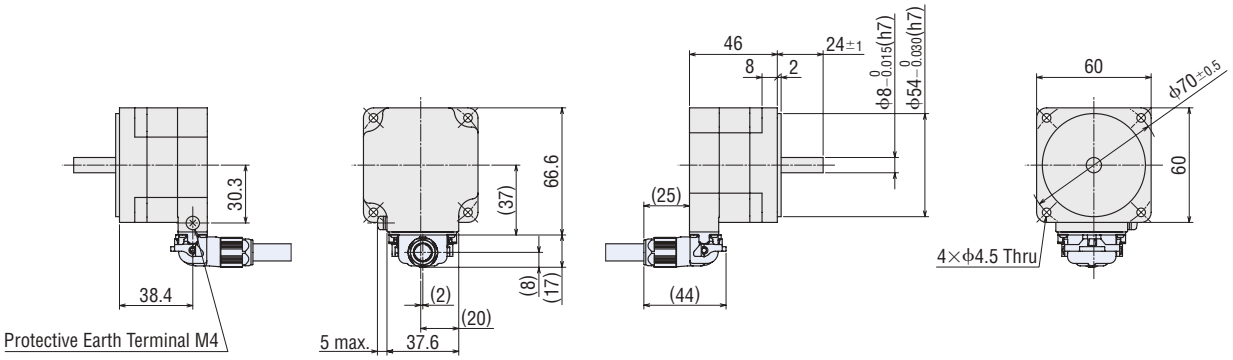

## ◇Parallel Shaft Gearhead **GFV** Gear・120 W

2D & 3D CAD

| Product Name | Motor Product Name | Gearhead Product Name | Gear Ratio | L | Mass kg | 2D CAD | |
|---|---|---|---|---|---|---|---|
| | | | | | | Connection cable drawing from the output shaft side is connected | Connection cable drawing from the counter-output shaft side is connected |
| **BLM5120HP-□S**<br>**BLM5120HP-□SF** | BLM5120HP-GFV | GFV5G□S<br>GFV5G□SF | **5～20** | 45 | 2.1 | A1469A | A1470A |
| | | | **30～100** | 58 | 2.4 | A1469B | A1470B |
| | | | **200** | 64 | 2.5 | A1469C | A1470C |

### •When connecting the connection cable drawing from the output shaft side

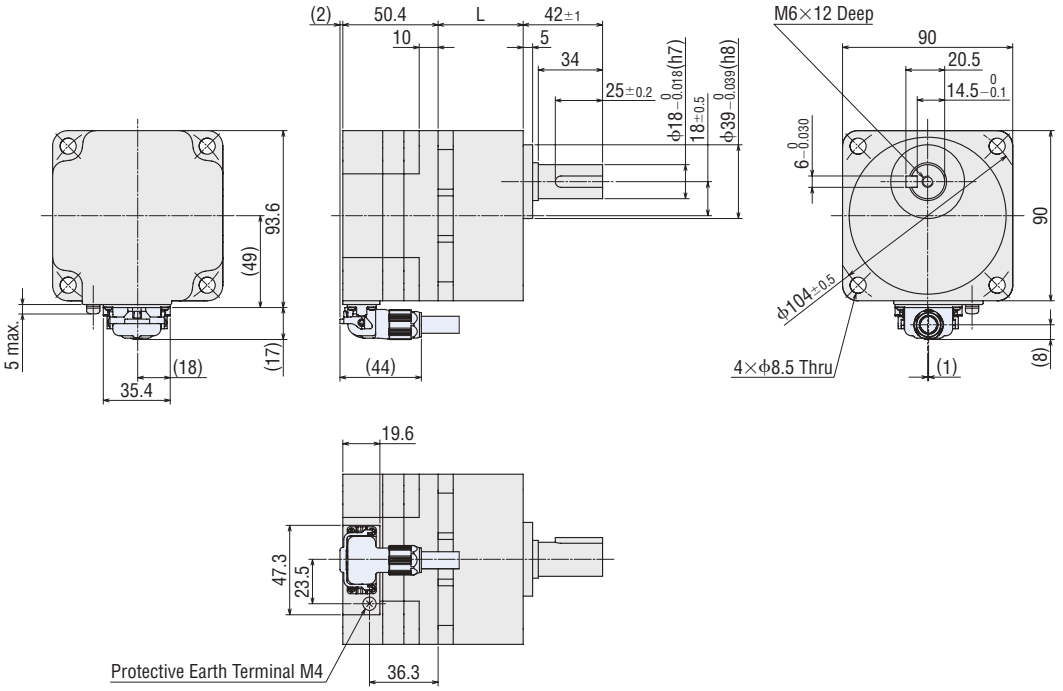


●At the time of shipment, the parallel key is fixed in the key slot of the gearhead shaft.

### •When connecting the connection cable drawing from the counter-output shaft side

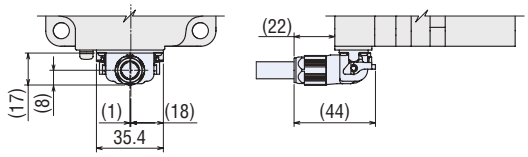


## ◇Round Shaft Type・120 W

**BLM5120HP-AS**

Mass: 1.1 kg

2D CAD A1479 3D CAD

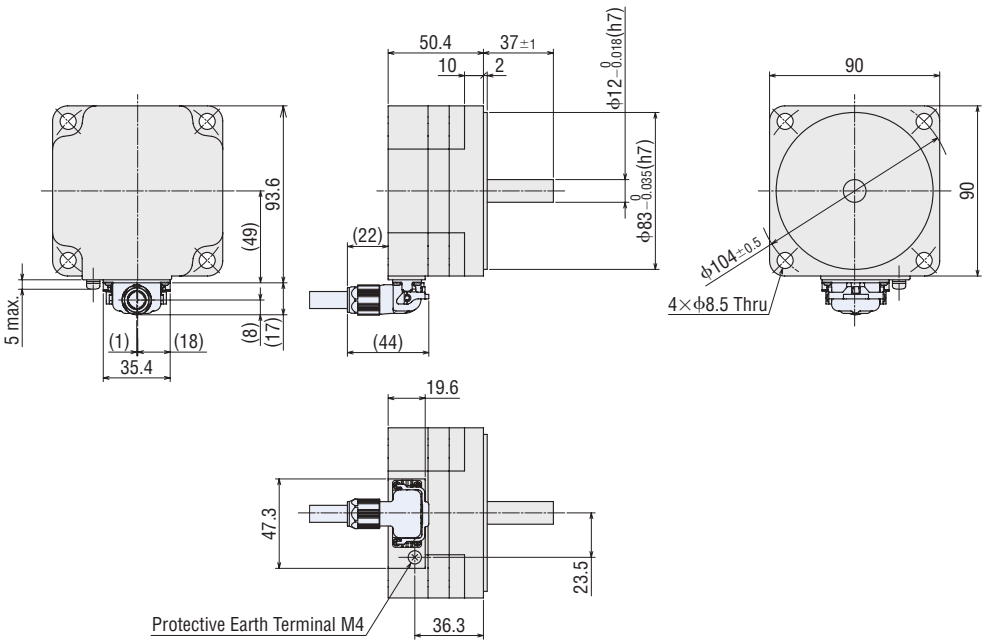

## ◇Parallel Shaft Gearhead **GFV** Gear・200 W

2D & 3D CAD

| Product Name | Motor Product Name | Gearhead Product Name | Gear Ratio | L | Mass kg | 2D CAD | |
|---|---|---|---|---|---|---|---|
| | | | | | | Connection cable drawing from the output shaft side is connected | Connection cable drawing from the counter-output shaft side is connected |
| **BLM6200SHP-□S** | BLM6200SHP-GFV | GFV6G□S | **5**～**20** | 60 | 4.7 | A1471A | A1472A |
| | | | **30**, **50** | 72 | | A1471B | A1472B |
| | | | **100**, **200** | 86 | | A1471C | A1472C |

### •When connecting the connection cable drawing from the output shaft side

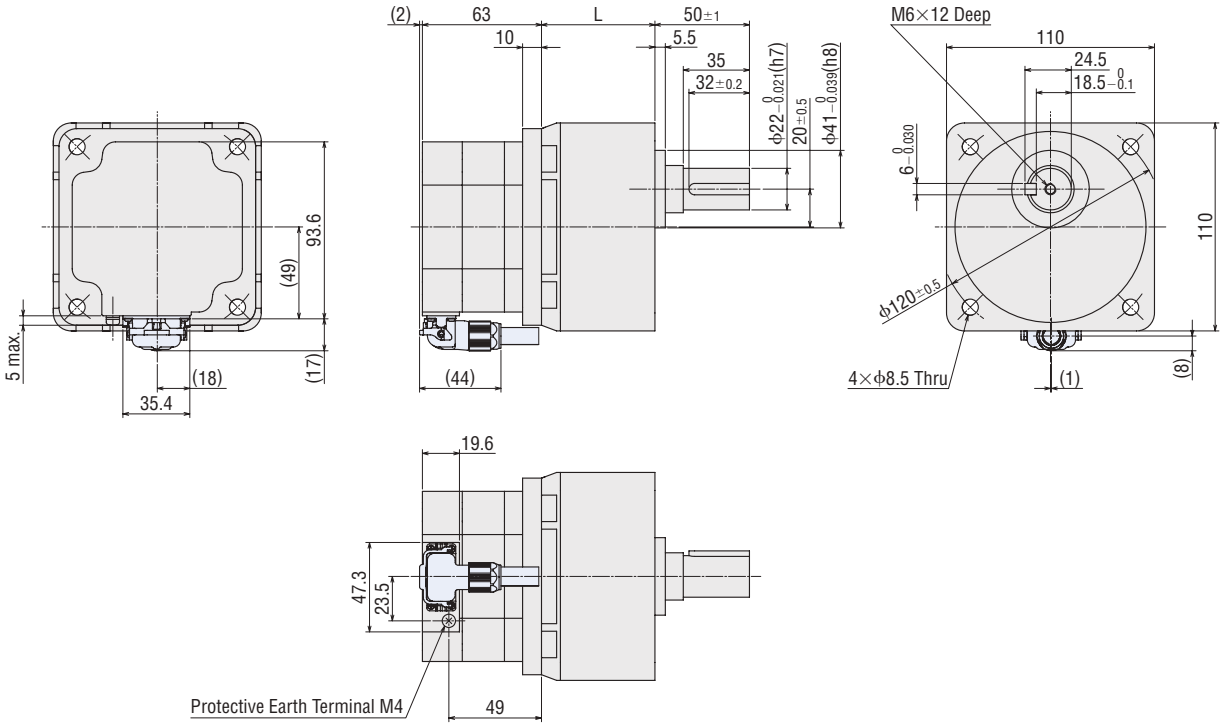


●At the time of shipment, the parallel key is fixed in the key slot of the gearhead shaft.

### •When connecting the connection cable drawing from the counter-output shaft side

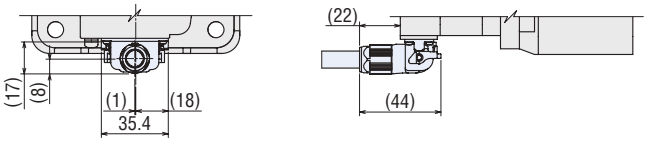


## ◇Round Shaft Type・200 W

**BLM5200HP-AS**

Mass: 1.6 kg

2D CAD A1481 3D CAD

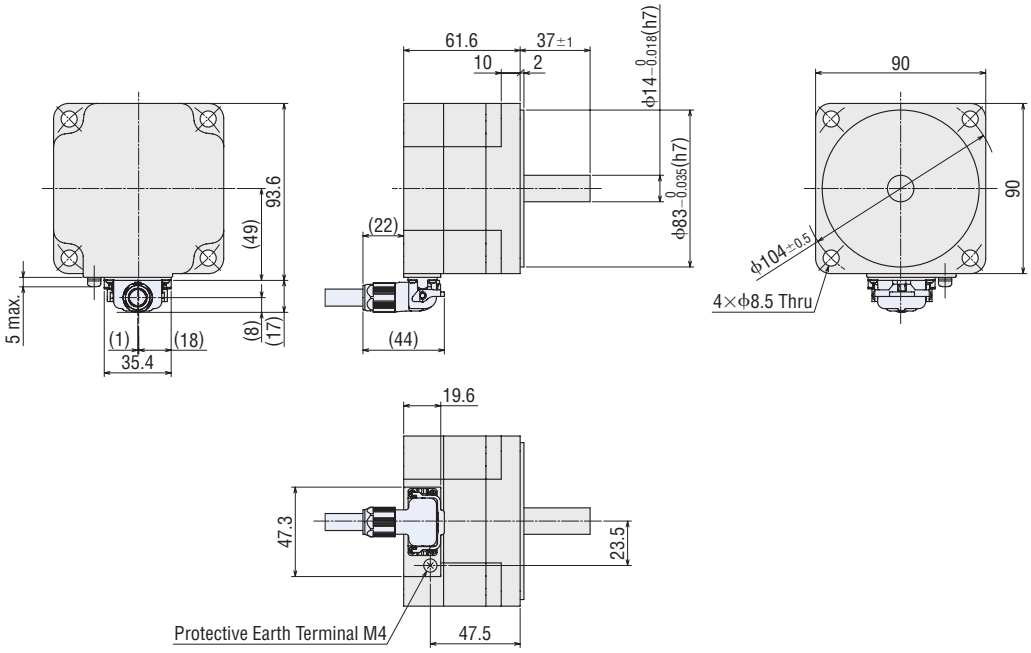

## ◇Parallel Shaft Gearhead **GFV** Gear・400 W

2D & 3D CAD

| Product Name | Motor Product Name | Gearhead Product Name | Gear Ratio | L | Mass kg | 2D CAD | |
|---|---|---|---|---|---|---|---|
| | | | | | | Connection cable drawing from the output shaft side is connected | Connection cable drawing from the counter-output shaft side is connected |
| **BLM6400SHP-□S** | BLM6400SHP-GFV | GFV6G□S | **5**～**20** | 60 | 5.2 | A1473A | A1474A |
| | | | **30**, **50** | 72 | | A1473B | A1474B |

### •When connecting the connection cable drawing from the output shaft side

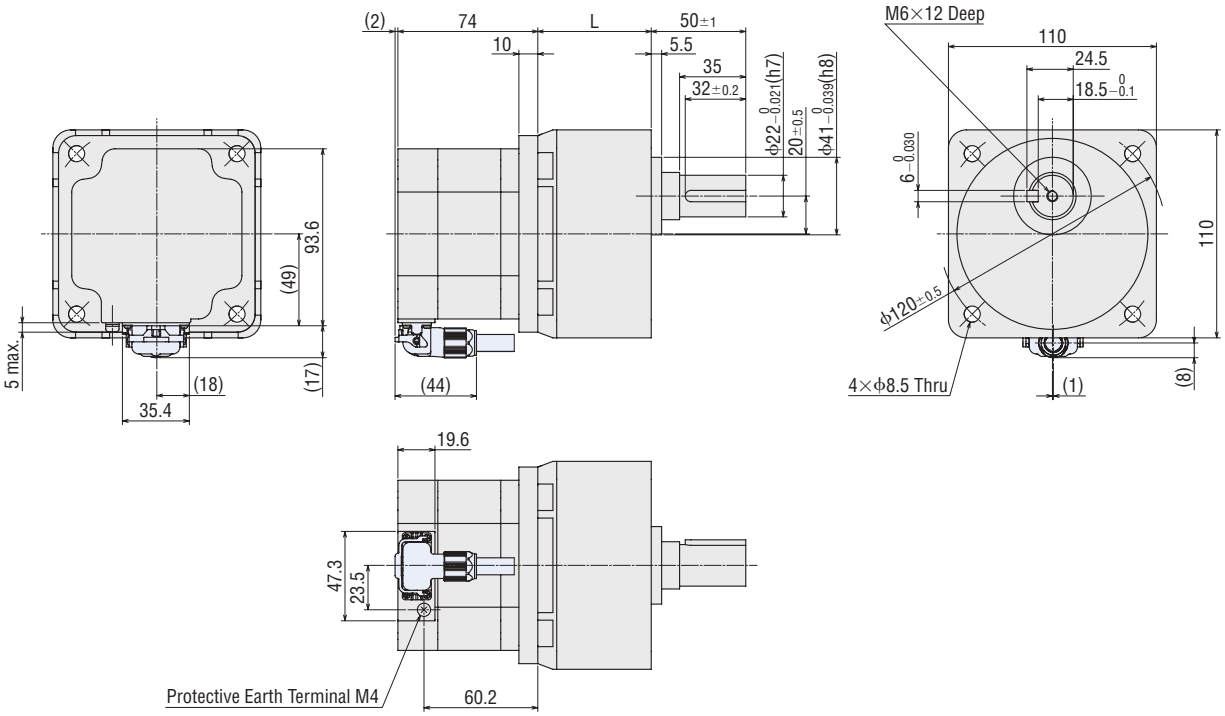


●At the time of shipment, the parallel key is fixed in the key slot of the gearhead shaft.

### •When connecting the connection cable drawing from the counter-output shaft side

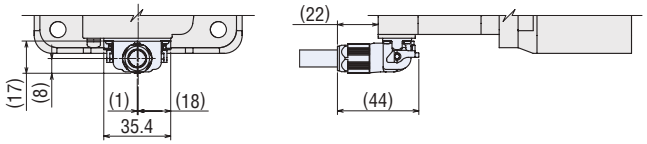


## ◇Round Shaft Type・400 W

**BLM5400HP-AS**

Mass: 2.1 kg

2D CAD A1483 3D CAD

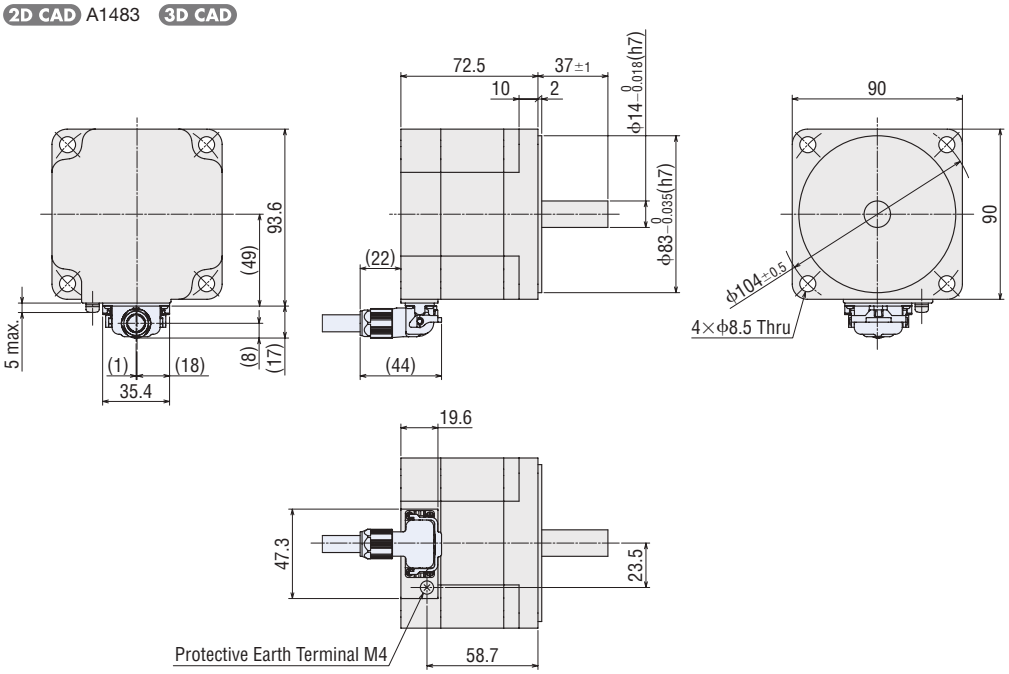

## ◇Parallel Shaft Gearhead **JV** Gear・200 W

2D & 3D CAD

| Product Name | Motor Product Name | Gearhead Product Name | Gear Ratio | Dimensions | | | Mass kg | 2D CAD | |
|---|---|---|---|---|---|---|---|---|---|
| | | | | A | L | B | | Connection cable drawing from the output shaft side is connected | Connection cable drawing from the counter-output shaft side is connected |
| **BLM5200HPK-5KV□S** | BLM5200HPK | 5KV□S | **300**, **450** | (290.1) | 61.6 | 47.5 | 12.1 | A1557 | A1558 |

•When connecting the connection cable drawing from the output shaft side

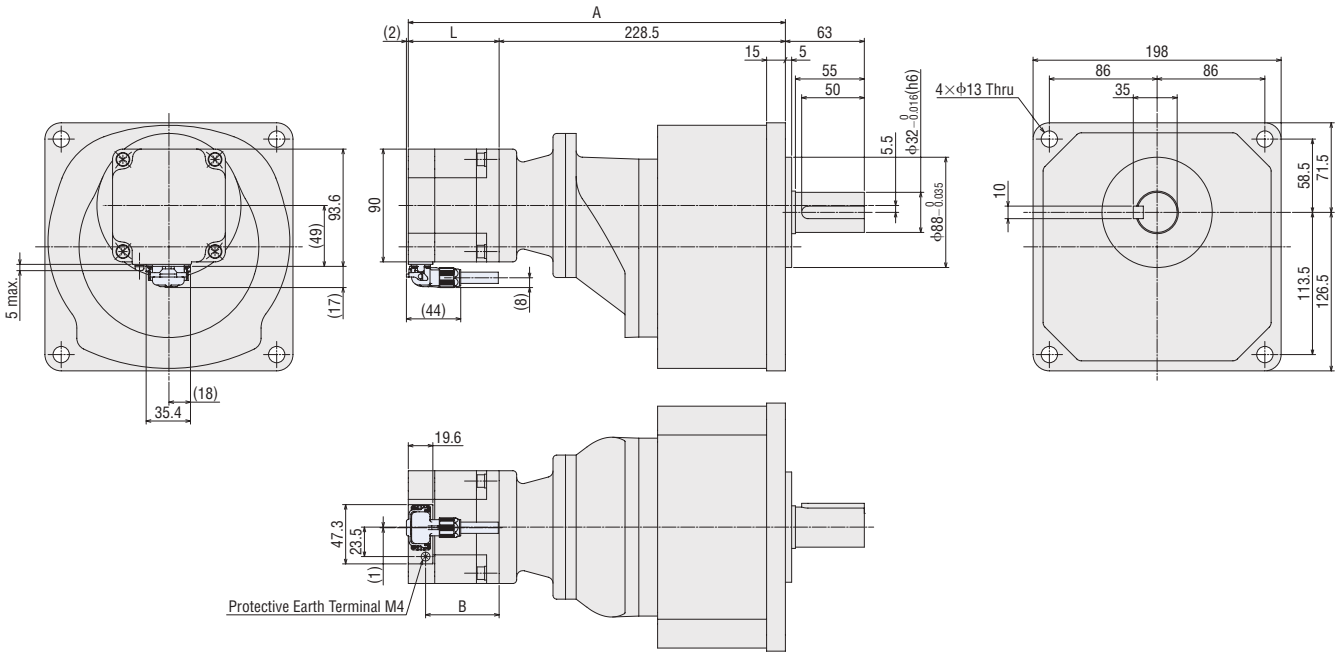


•When connecting the connection cable drawing from the counter-output shaft side

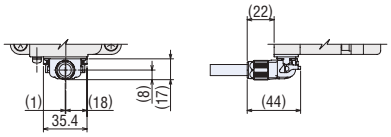

## ◇Legged Gearhead **JB** Gear・200 W

2D & 3D CAD

| Product Name | Motor Product Name | Gearhead Product Name | Gear Ratio | Dimensions No. | L | S | Mass kg | 2D CAD | |
|---|---|---|---|---|---|---|---|---|---|
| | | | | | | | | Connection cable drawing from the output shaft side is connected | Connection cable drawing from the counter-output shaft side is connected |
| **BLM5200HPK-5■B□B-L** | BLM5200HPK | 5■B□B | **5, 10, 20** | ① | 61.6 | 47.5 | 4.6 | A1537 | A1538 |
| | | | **30, 50** | ② | | | 5.6 | A1539 | A1540 |
| | | | **100, 200** | ③ | | | 7.6 | A1541 | A1542 |
| | | | **300, 450** | ④ | | | 11.6 | A1543 | A1544 |
| | | | **600, 1200** | ⑤ | | | 18.1 | A1545 | A1546 |

| Dimensions No. | Total Length | Gearhead Dimensions | | | | | | | | | | Output Shaft Dimensions | | | | | | Output Shaft Tapping Size T |
|---|---|---|---|---|---|---|---|---|---|---|---|---|---|---|---|---|---|---|
| | A | B | C | D | E | F | G | H | I | J | K | M | N | O | P | Q | R | |
| ① | (219.1) | 157.5 | 85±0.2 | 131 | 110 | 134 | ϕ9 | 40 | 45 | 64 | 10 | $\phi 18^{0}_{-0.011}$(h6) | 16.5✻ | 30 | 27 | 20.5 | 6 | M6 15 Deep |
| ② | (245.1) | 183.5 | 90±0.2 | 139 | 130 | 154 | ϕ11 | 65 | 55 | 90 | 12 | $\phi 22^{0}_{-0.013}$(h6) | 19✻ | 40 | 35 | 24.5 | 6 | M8 20 Deep |
| ③ | (258.1) | 196.5 | 110±0.2 | 167 | 140 | 175 | ϕ11 | 90 | 65 | 125 | 15 | $\phi 28^{0}_{-0.013}$(h6) | 23.5✻ | 45 | 40 | 31 | 8 | |
| ④ | (353.1) | 291.5 | 130±0.2 | 198 | 170 | 208 | ϕ13 | 130 | 70 | 168 | 18 | $\phi 32^{0}_{-0.016}$(h6) | 5.5 | 55 | 50 | 35 | 10 | M10 25 Deep |
| ⑤ | (375.1) | 313.5 | 150±0.2 | 230 | 210 | 254 | ϕ15 | 150 | 90 | 196 | 20 | $\phi 40^{0}_{-0.016}$(h6) | 0 | 65 | 60 | 43 | 12 | |

✻The center position of the gearhead output shaft is offset in an upper position than the motor's center position.

●When connecting the connection cable drawing from the output shaft side

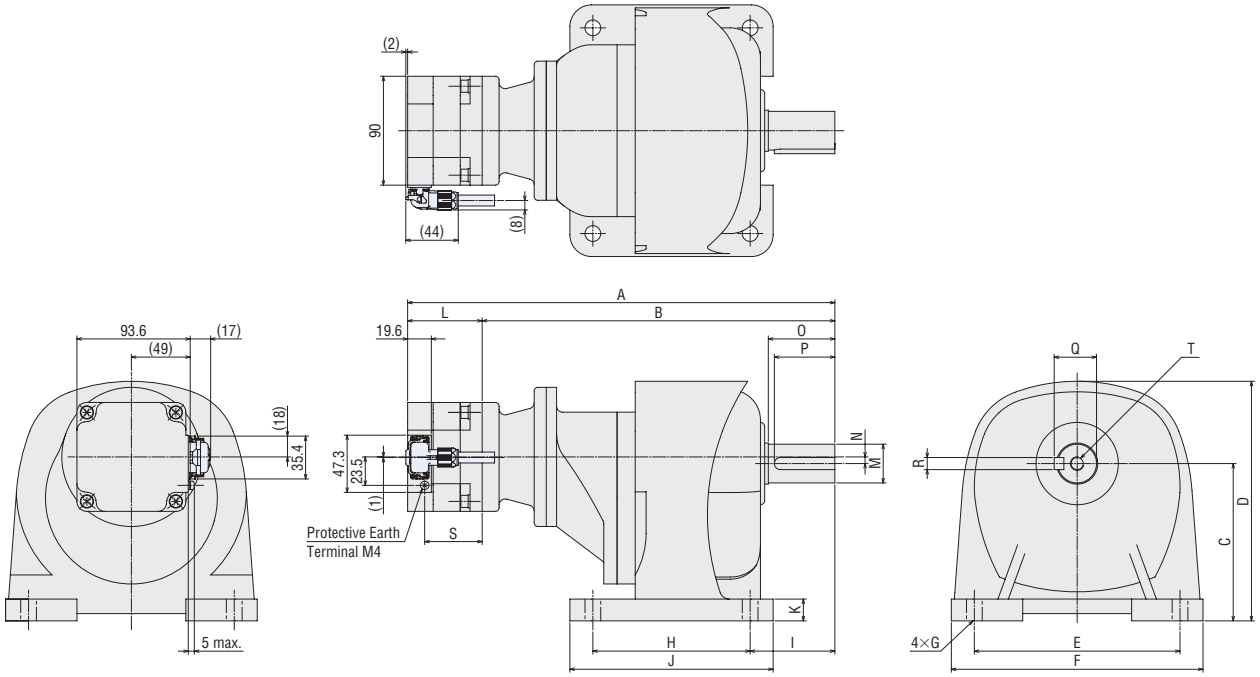


●When connecting the connection cable drawing from the counter-output shaft side

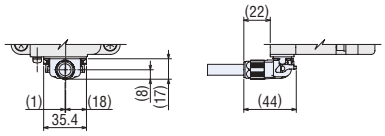

## ◇Hypoid Right-Angle Hollow Shaft **JH** Gear・60 W

2D & 3D CAD

| Product Name | Motor Product Name | Gearhead Product Name | Mass kg | 2D CAD | |
|---|---|---|---|---|---|
| | | | | Connection cable drawing from the output shaft side is connected | Connection cable drawing from the counter-output shaft side is connected |
| **BLM460SHPK-4H□S** | BLM460SHPK | 4H□S | 2.6 | A1604 | A1605 |

•When connecting the connection cable drawing from the output shaft side

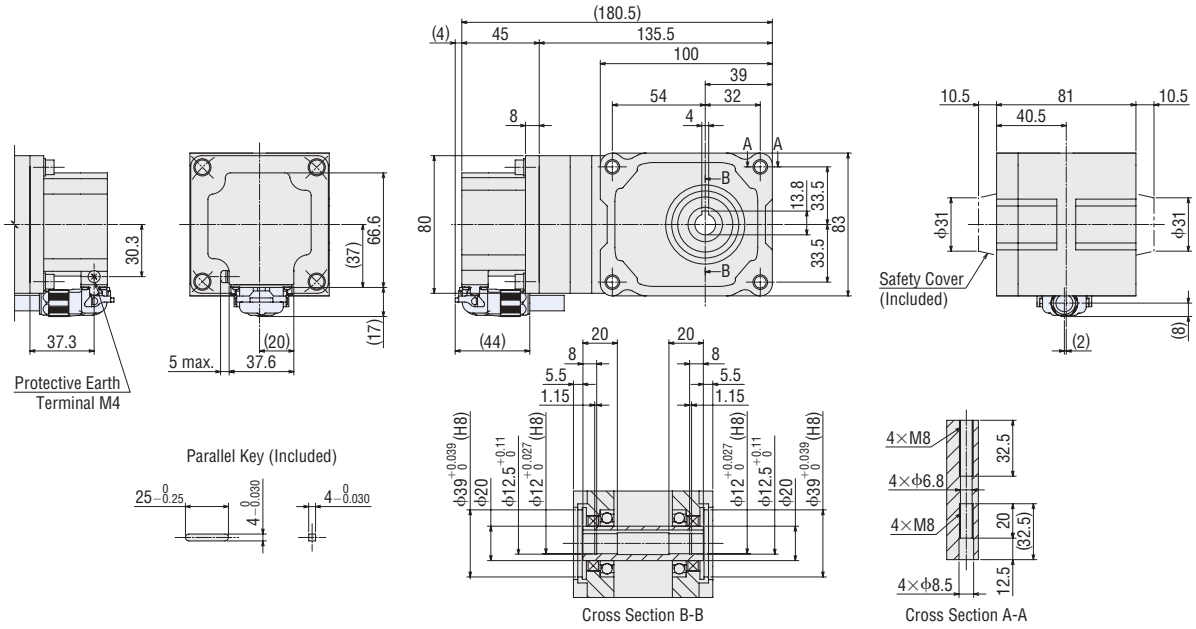


•When connecting the connection cable drawing from the counter-output shaft side

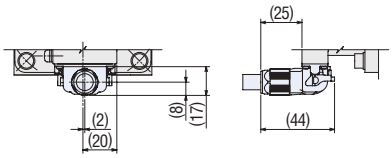

## ◇Hypoid Right-Angle Hollow Shaft **JH** Gear・120 W

2D & 3D CAD

| Product Name | Motor Product Name | Gearhead Product Name | Mass kg | 2D CAD | |
|---|---|---|---|---|---|
| | | | | Connection cable drawing from the output shaft side is connected | Connection cable drawing from the counter-output shaft side is connected |
| **BLM5120HPK-5H□S** | BLM5120HPK | 5H□S | 4.1 | A1535 | A1536 |

•When connecting the connection cable drawing from the output shaft side

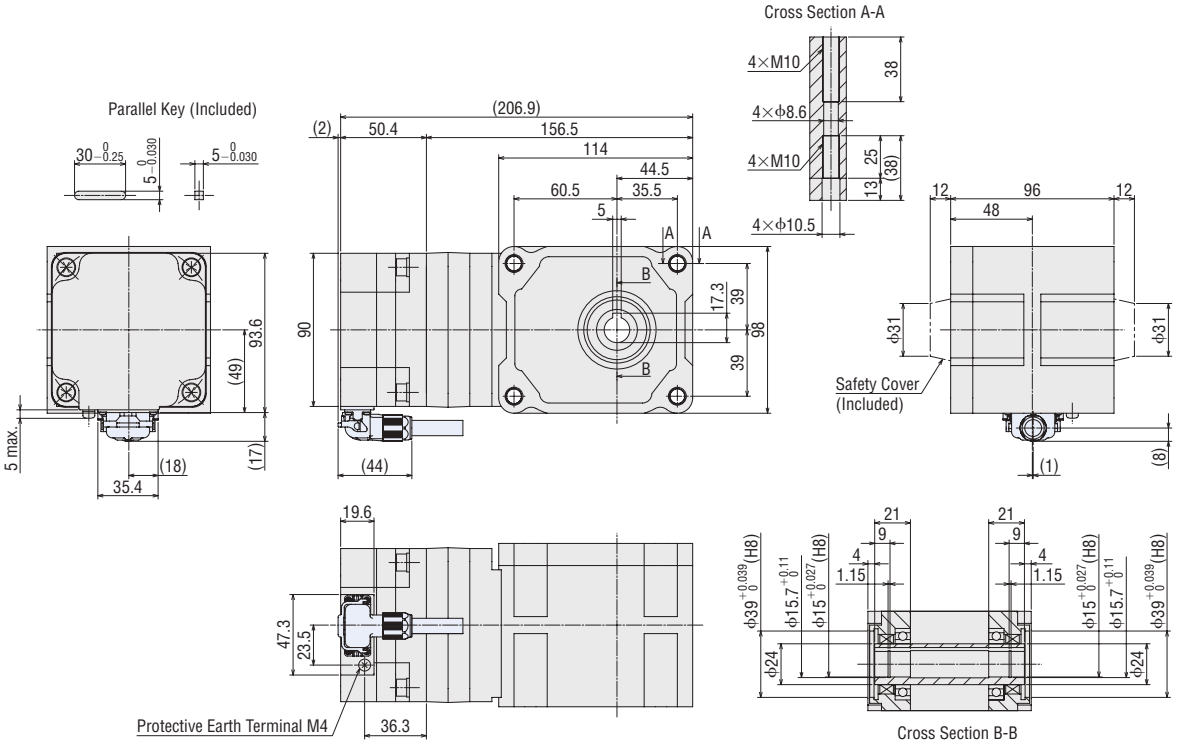


•When connecting the connection cable drawing from the counter-output shaft side

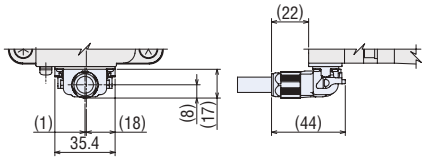

## ◇Hypoid Right-Angle Hollow Shaft **JH** Gear・200 W

2D & 3D CAD

| Product Name | Motor Product Name | Gearhead Product Name | Gear Ratio | Dimensions | | | Mass kg | 2D CAD | |
|---|---|---|---|---|---|---|---|---|---|
| | | | | C | L | D | | Connection cable drawing from the output shaft side is connected | Connection cable drawing from the counter-output shaft side is connected |
| **BLM5200HPK-5XH□S** | BLM5200HPK | 5XH□S | **5**, **10**, **15**, **20**, **30**, **50** | (267.1) | 61.6 | 47.5 | 6.6 | A1565 | A1566 |

•When connecting the connection cable drawing from the output shaft side

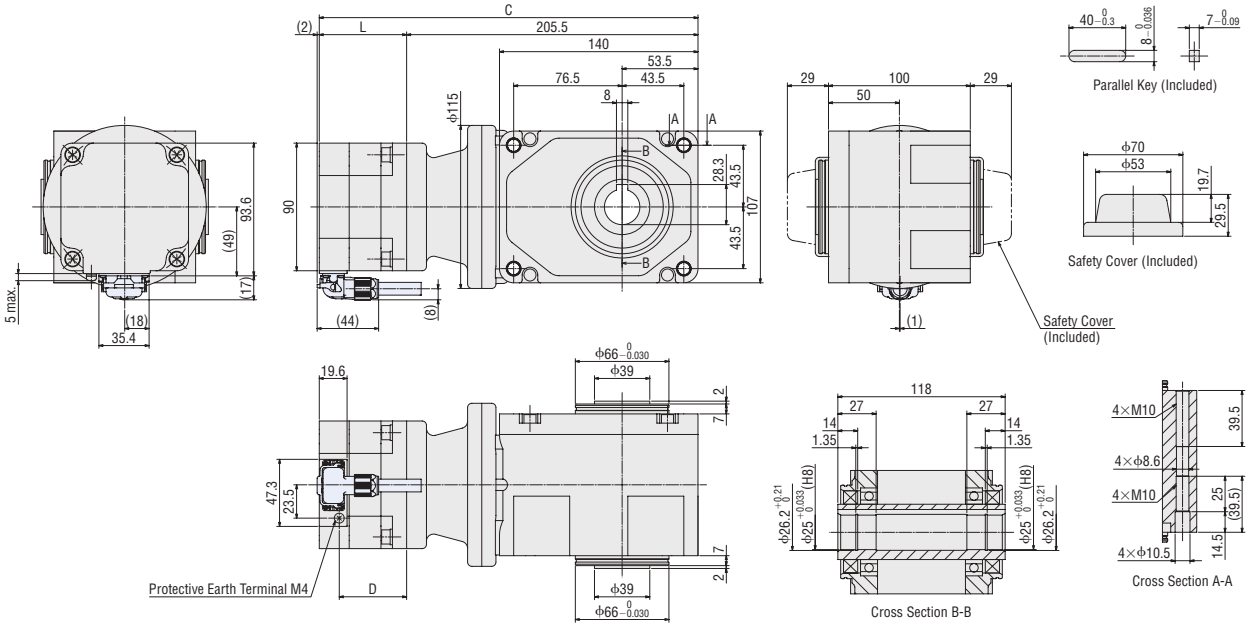


•When connecting the connection cable drawing from the counter-output shaft side

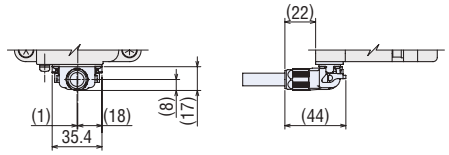

## ◇Hypoid Right-Angle Hollow Shaft **JH** Gear・200 W

2D & 3D CAD

| Product Name | Motor Product Name | Gearhead Product Name | Gear Ratio | Dimensions | | | Mass kg | 2D CAD | |
|---|---|---|---|---|---|---|---|---|---|
| | | | | C | L | D | | Connection cable drawing from the output shaft side is connected | Connection cable drawing from the counter-output shaft side is connected |
| **BLM5200HPK-5YH□S** | BLM5200HPK | 5YH□S | **100**, **200** | (306.6) | 61.6 | 47.5 | 8.1 | A1567 | A1568 |

•When connecting the connection cable drawing from the output shaft side

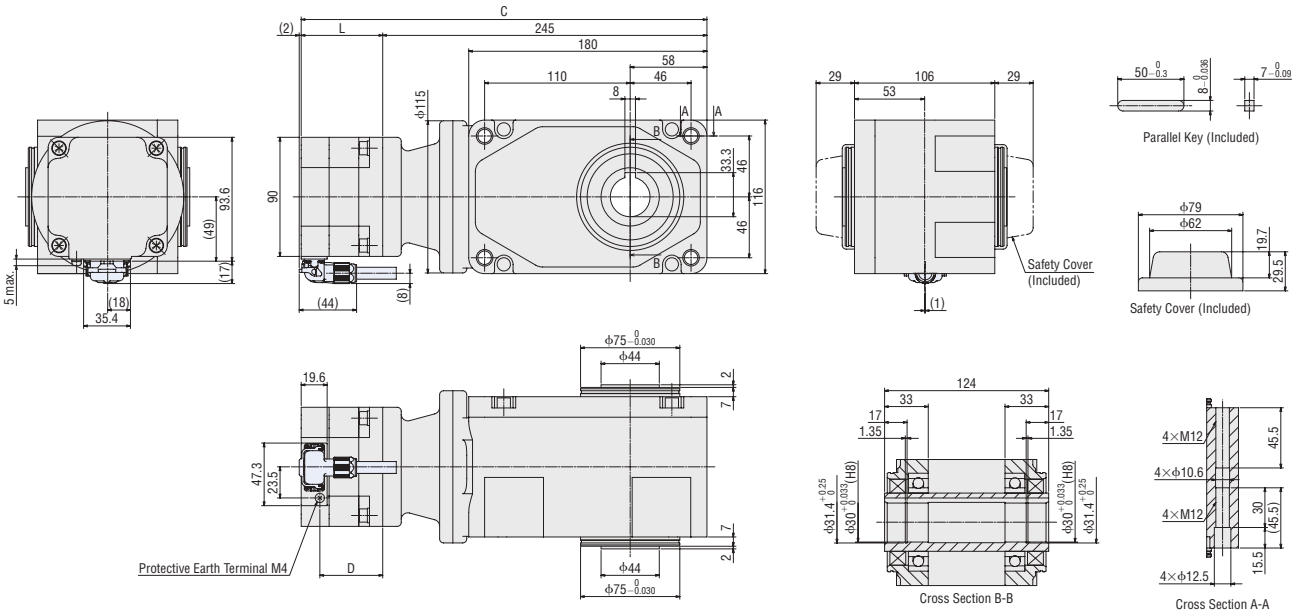


•When connecting the connection cable drawing from the counter-output shaft side

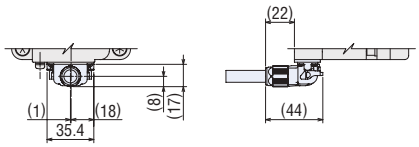


05

**BLE2** Series

## Drivers

**BLE2D30-A**, **BLE2D30-C**, **BLE2D60-A**, **BLE2D60-C**, **BLE2D120-A**, **BLE2D120-C**, **BLE2D200-C**, **BLE2D400-S**

Mass: 0.8 kg

2D CAD A1461 3D CAD

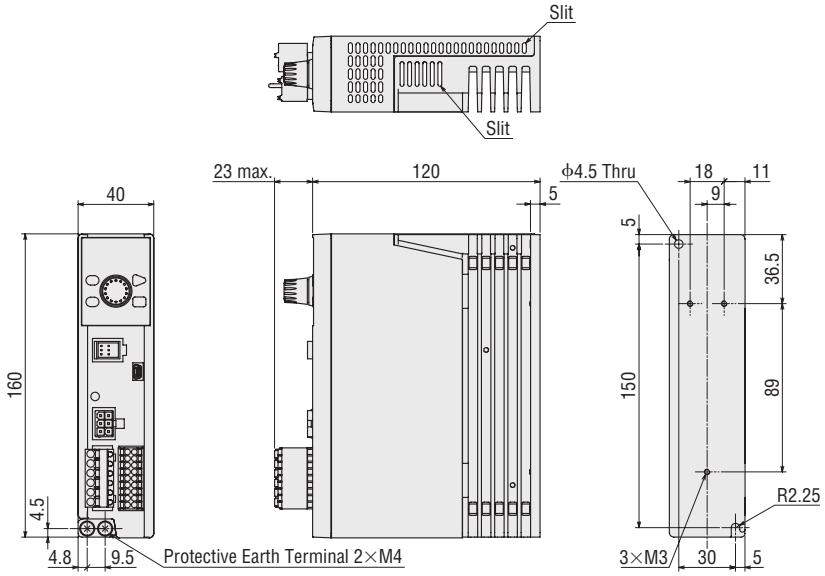


## Connection Cables

| Length L (m) | Product Name | | Mass (kg) |
|---|---|---|---|
| | Drawing on the Output Shaft Side | Drawing on the Counter-output Shaft Side | |
| 0.5 | **CC005HBLF** | **CC005HBLB** | 0.08 |
| 1 | **CC010HBLF** | **CC010HBLB** | 0.12 |
| 1.5 | **CC015HBLF** | **CC015HBLB** | 0.2 |
| 2 | **CC020HBLF** | **CC020HBLB** | 0.25 |
| 2.5 | **CC025HBLF** | **CC025HBLB** | 0.32 |
| 3 | **CC030HBLF** | **CC030HBLB** | 0.38 |
| 4 | **CC040HBLF** | **CC040HBLB** | 0.49 |
| 5 | **CC050HBLF** | **CC050HBLB** | 0.62 |
| 7 | **CC070HBLF** | **CC070HBLB** | 0.86 |
| 10 | **CC100HBLF** | **CC100HBLB** | 1.2 |
| 15 | **CC150HBLF** | **CC150HBLB** | 1.9 |
| 20 | **CC200HBLF** | **CC200HBLB** | 2.5 |

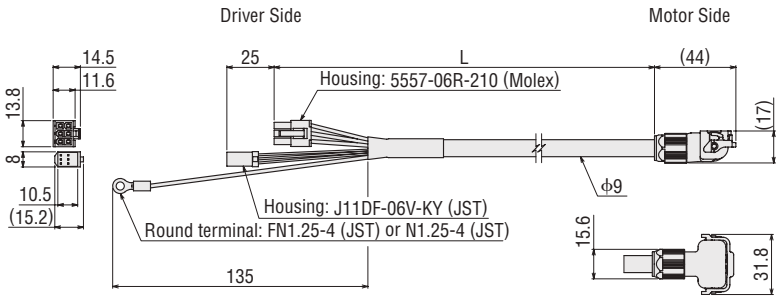

## Dimensions of Installation Screws

L2 represents the length when the plain washer and the spring washer are installed on the screw head.

### Parallel Shaft Gearhead

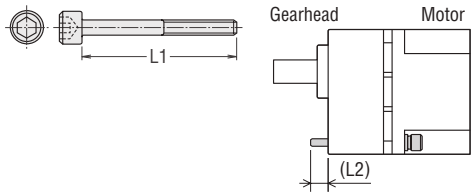


| Product Name | Gear Ratio | Installation Screws | | L2 (mm) |
|---|---|---|---|---|
| | | Screw Size | L1 (mm) | |
| GFV2G□S (F) | 5~20 | M4 | 50 | 6 |
| | 30~100 | | 55 | 7 |
| | 200 | | 60 | 7 |
| GFV4G□S (F) | 5~20 | M6 | 60 | 8 |
| | 30~100 | | 65 | 8 |
| | 200 | | 70 | 8 |
| GFV5G□S (F) | 5~20 | M8 | 70 | 11.5 |
| | 30~100 | | 85 | 13.5 |
| | 200 | | 90 | 12.5 |
| GFV6G□S | 5~20 | M8 | 85 | 11 |
| | 30, 50 | | 100 | 14 |
| | 100, 200 | | 110 | 10 |

● Installation screw: Includes 4 plain washers and 4 spring washers each.
The installation screw material is stainless steel.

### Hypoid Right-Angle Hollow Shaft

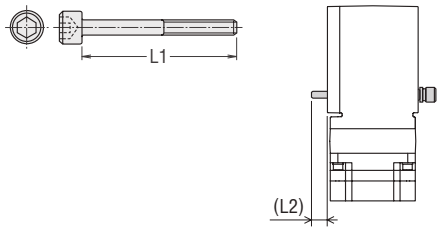


| Product Name | Gear Ratio | Installation Screws | | L2 (mm) |
|---|---|---|---|---|
| | | Screw Size | L1 (mm) | |
| 4H□S | 10~200 | M6 | 95 | 11 |
| 5H□S | 10~200 | M8 | 110 | 10 |
| 5XH□S | 5~50 | M8 | 120 | 16 |
| 5YH□S | 100, 200 | M10 | 130 | 19.5 |

● Installation screw: Includes 4 plain washers and 4 spring washers each
The installation screw material is stainless steel.

● A number in the box □ in the product name indicates the gear ratio.

# Connection and Operation

## Names and Functions of Driver Parts

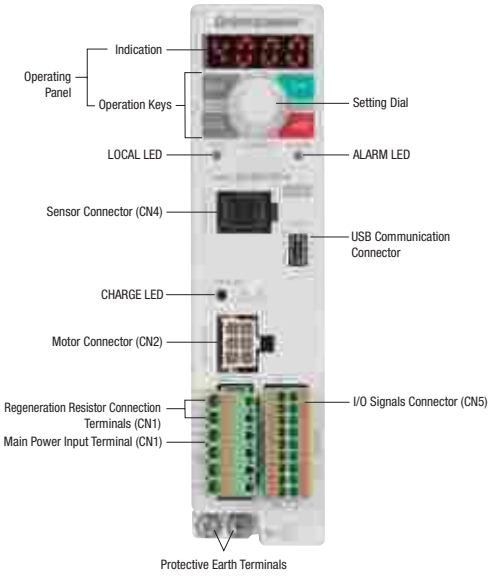


| Name | Indication | Description |
|---|---|---|
| Operating Panel | — | Indication: Displaying information such as monitored content, setting screens, and alarms. |
| | MODE<br>LOCAL<br>RUN<br>STOP | Operation keys: Changing operation modes and parameters<br>During local operation, press the RUN key or STOP key to operate or stop the motor. |
| | PUSH-SET | Setting dial: Rotate it to set the parameter value or change the screen. Press to finalize (SET) the setting. |
| LOCAL LED | LOCAL | Illuminates in green during local operation. |
| ALARM LED | ALARM | Blinking in red during alarm generation.<br>Blinking in orange during information generation. |
| CHARGE LED | CHARGE | Illuminates in red while the main power supply is turned on.<br>Goes out after the main power supply is turned off and residual voltage in the motor drops to a safe level. |
| Main Power Input Terminal (CN1) | — | Connect the main power supply. |
| | L, N, NC | Single-Phase 100-120 VAC:<br>Connect 100-120 VAC to L and N. NC is not used. |
| | L1, L2, NC<br>L1, L2, L3 | Single-Phase 200-240 VAC:<br>Connect 200-240 VAC to L and N. NC is not used. |
| | | Three-Phase 200-240 VAC:<br>Connect Three-Phase 200-240 VAC to L1, L2, and L3. |
| | L1, L2, L3 | Three-Phase 200-240 VAC:<br>Connect Three-Phase 200-240 VAC to L1, L2, and L3. |
| Regeneration Resistor Connection Terminals (CN1) | RG1, RG2 | Regeneration resistor is connected. |
| Motor Connector (CN2) | MOTOR | Connect the power connector (white) of the connection cable. |
| Sensor Connector (CN4) | HALL-S | Connect the sensor connector (black) of the connection cable. |
| USB Communication Connector | ⇐ | Connect the computer in which support software **MEXE02** is installed. |
| I/O Signals Connector (CN5) | I/O | Connect an input signal. |
| | | Connect an optional (sold separately) external speed potentiometer or external DC power supply. |
| | | Connect an output signal. |
| Protective Earth Terminals | ⏚ | Connect the protective earth terminal and earth wire of the connection cable. |

### ◇Operation Keys

The **BLE2** Series is equipped with 4 operation modes.

| Operating Mode | Description | Setting Items |
|---|---|---|
| Monitoring Mode | Displayed when power is applied. | Rotation speed, load factor, operation data no., alarm, information, I/O monitor |
| Data Mode | Allows the setting of operation data items up to 16 speed. | Rotation speed, torque limit values, acceleration/deceleration time, reset |
| Parameter Mode | Allows the setting of various parameters. | Basic configuration parameters, parameters for adjusting speed or torque limits, parameters for setting alarm information, operation setting parameters, I/O operation parameters, I/O function selection parameters, I/F function parameters, reset, configuration |
| Test Mode | Allows the checking of connection with I/O signals. | |

### ◇Main Power Input Terminal (CN1)

Connects to the main power supply. Connect a power supply that matches with the power supply voltage to be used.

| •Single-Phase 100-120 VAC | •Single-Phase 200-240 VAC | •Three-Phase 200-240 VAC |
|---|---|---|
| 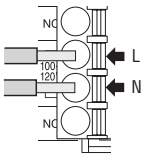 | 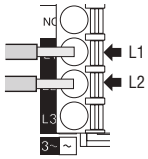 | 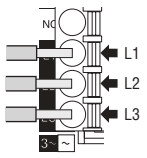 |



### •Applicable Lead Wire Size

AWG18~14 (0.75~2.0 mm²)

### ◇USB Cable Connections

Use a USB cable of the following specifications.

| | |
|---|---|
| Specifications | USB2.0 (Full speed) |
| Cable | Length: 3 m or less |
| | Shape: A - mini-B |

## Operation with the Operating Panel

### ◇Selecting the Operation

Pressing the "LOCAL" key activates the illumination of the LOCAL LED, allowing the operation of the operating panel.

### ◇Selecting the Rotation Direction

Pressing the "MODE" key changes the rotation direction.

### ◇Motor Startup/Stop

Pressing the "RUN" key activates the rotation of the motor.
Pressing the "STOP" key stops the motor.

### ◇Speed Setting Method

Pressing the "Setting Dial" makes the displayed content flash, and turning the dial to the right increases the speed.

Turning "Setting Dial" to the left decreases the speed. Pressing it finalizes the rotation speed.

### •Operating Panel

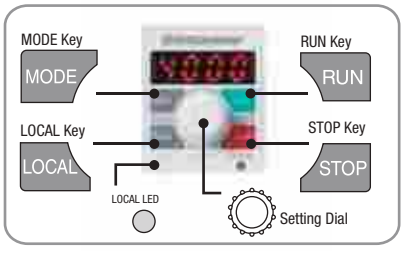

## ●Operation by External Signals

### ◇I/O Signals Connector (CN5)

| Pin No. | Signal Type | Signal Name | Functions* | Description | |
|---|---|---|---|---|---|
| 1 | Input | IN-COM0 | Input signal common (for external power supply) | Connect for external power supplies. | |
| 2 | | IN0 | FWD | Turning ON the FWD input or REV input activates the rotation of the motor. Turning OFF the FWD input or REV input stops the motor. | 2-wire input method |
| 3 | | IN1 | REV | | |
| 4 | | IN2 | STOP-MODE | Select the method for stopping the motor. | |
| 5 | | IN3 | M0 | Selecting ON/OFF of the M0 or M1 input selects an operation data No. | |
| 6 | | IN4 | M1 | | |
| 7 | | IN5 | ALARM-RESET | Alarms are reset. | |
| 8 | | IN6 | Not used | Various functions can be allocated. | |
| 9 | | IN-COM1 | 0 V (for internal power supply) | Connect for internal power supply. | |
| 10 | | TH | TH | When using a regeneration resistor, connect the thermostat output of the regeneration resistor. (Normally closed.) When the regeneration resistor is heated and the thermostat output is turned OFF, a "Regeneration resistor overheat" alarm is generated. | |
| 11 | | | | | |
| 12 | | VH | Input of external analog settings | Connect to these pins when setting rotation speed or a torque limitation value from the outside by using an external speed potentiometer or external DC voltage. | |
| 13 | | VM | | | |
| 14 | | VL | | | |
| 15 | Output | OUT0+ | SPEED-OUT | For every rotation of the motor output shaft, 30 pulses are output. | |
| 16 | | OUT0− | | | |
| 17 | | OUT1+ | ALARM-OUT | The generation of an alarm activates an output. (Normally closed) | |
| 18 | | OUT1− | | | |

*The [ ] indicates the functions assigned in the factory. For pins No. 2～8 and 15～18, the allocated functions can be changed.
7 pins are allocated to 12 types of input signals, and 2 pins are allocated to 7 types of output signals.

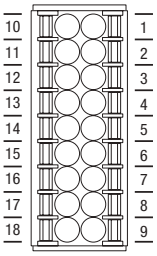


●Applicable Lead Wire Size
AWG24～18
(0.2～0.75 mm²)

### ◇Signals for which allocation can be changed

| Signal Type | Functions | Description | |
|---|---|---|---|
| Input | START/STOP | When the START/STOP input and RUN/BRAKE input are turned ON, the motor rotates. Turning OFF the START/STOP input reduces motor speed to stop the motor. Turning OFF the RUN/BRAKE input immediately stops the motor. | 3-wire input method |
| | RUN/BRAKE | | |
| | CW/CCW | Signal for changing the rotation direction of the motor. | |
| | M2 | Signals for selecting operation data No. | |
| | M3 | | |
| | H-FREE | Signal for selecting the activation/deactivation of the simple holding function. | |
| | TL | Signal for toggling, through an external measure, between the activation and deactivation of torque limitation. | |
| | INFO-CLR | Signal for resetting the information that is being generated. | |
| | HMI | Signal for restricting operation via the operating panel or support software **MEXE02**. | |
| | EXT-ERROR | Signal for forcedly stopping the motor from the outside. | |
| Output | MOVE | Signal which is output when the operation input is turned ON and the motor is rotating. | |
| | INFO | Signal which is output when information is generated. | |
| | TLC | Signal which is output when the output torque of the motor reaches the torque limit value. | |
| | VA | Signal which is output when the motor detection speed reaches the set speed ±VA detection range. | |
| | DIR | Signal that outputs the rotation direction of the motor. | |

## ●Connection Diagram

The diagrams shown below are the connection examples for when Single-Phase 100-120 VAC is applied and the rotation speed is set from the outside. (Sink Logic)
I/O signals specified in [ ] are factory set signals.

### ◇When Using the Built-in Power Supply

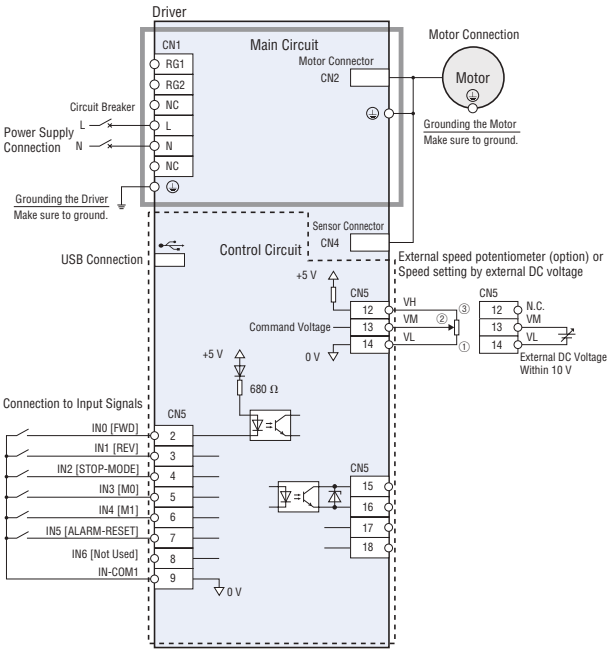


### ◇When Using External Power Supply

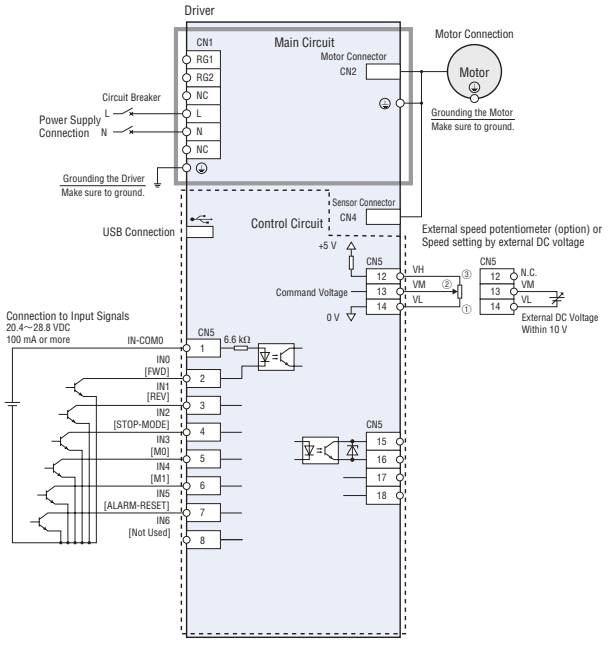

## Timing Chart (2 wire input method)

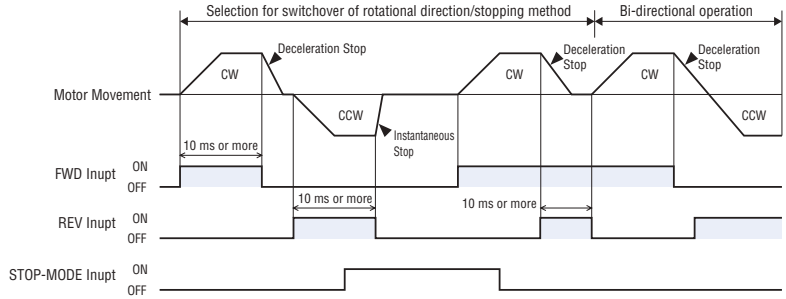


**FWD input or REV input**

Turning ON the FWD input rotates the motor to the CW (clockwise) direction. Turning it OFF decelerates the motor to a stop.

Turning ON the REV input rotates the motor to the CCW (counter-clockwise) direction. Turning it OFF decelerates the motor to a stop.

**STOP-MODE input**

Select the motor stop method for when the FWD input or REV input is turned OFF.

When the STOP-MODE input is turned OFF, a deceleration stop is performed according to the deceleration stop of the operation data No.

When the STOP-MODE is turned ON, the motor stops in the shortest time (instantaneous stop).

## I/O Signal Circuits

Change the wiring of the sink logic and the source logic in accordance with the external control equipment that you will use.

### ◇Input Circuit

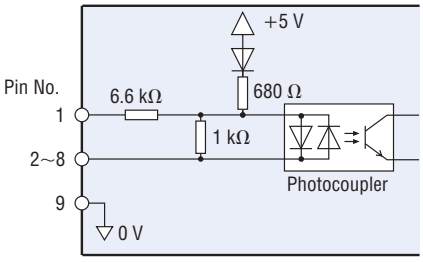


### ◇Examples of Connections to Host Controllers

**•Sink Logic**

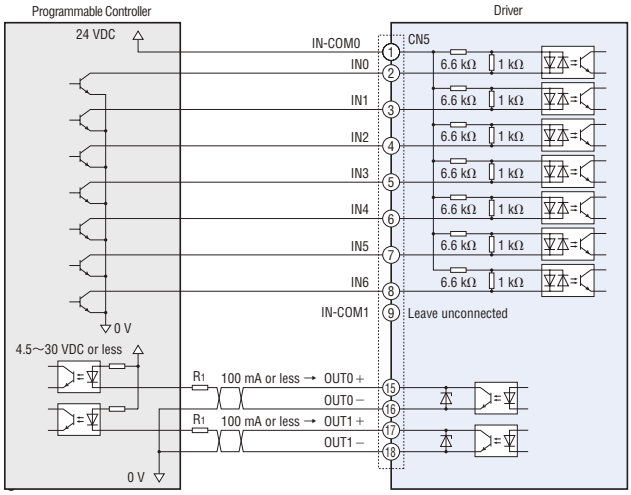


**•Source Logic**

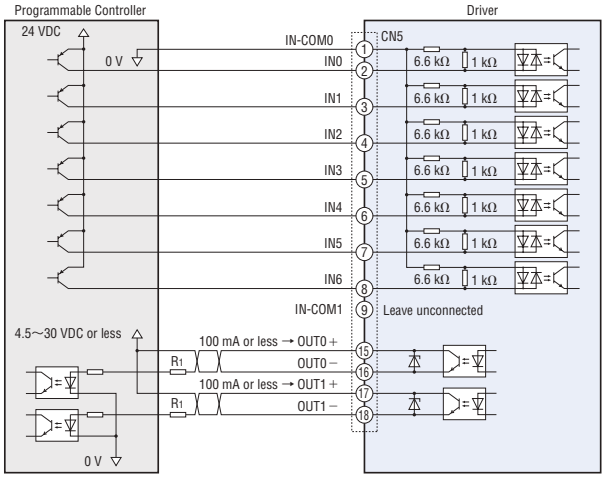


### ◇Output Circuit

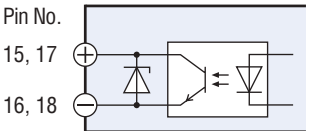


### ◇When an external control equipment with a built-in clamp diode is used

With external control equipment with built-in clamping diodes connected, if the power of the external control equipment is turned off with the driver turned on, the motor may rotate due to current flowing around. The motor may also rotate even if the driver and the external control equipment are simultaneously turned ON/OFF because these two devices have different current capacities.

To turn off the power, first turn off the driver and then the external control equipment. To turn on the power, first turn on the external control equipment and then the driver.

**•Sink logic example**

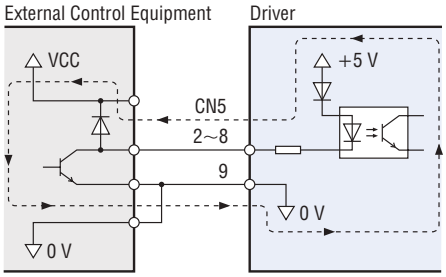


### ◇SPEED-OUT Output

Synchronized with motor operation, the motor emits a 30 pulse signal (the pulse width of which is 0.2 ms) per rotation of the motor output shaft.

The measurement of the frequency of the speed output enables the calculation of approximate rotation speed of the motor.

$$\text{SPEED-OUT Frequency [Hz]} = \frac{1}{\text{T[s]}}$$

$$\text{Motor Shaft Speed [r/min]} = \frac{\text{SPEED-OUT Frequency [Hz]}}{30} \times 60$$

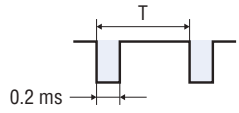


### ◇ALARM-OUT Output

An activation of the driver's protective function turns OFF the output, causing the ALARM LED to flash. An alarm code is displayed on the operating panel, and the motor naturally stops. (The motor instantaneously stops when it is stopped by an external signal.)

## Speed Setting Methods

Rotation speed can be set by any of the 4 methods described below.

### ◇Setting using the Operating Panel

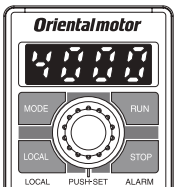


### ◇Setting with External Speed Potentiometer

Connect the external speed potentiometer to the I/O signal connector (CN5) of the driver.

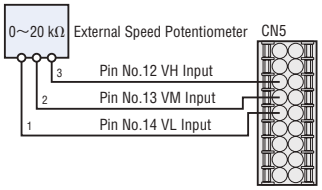


• External Speed Potentiometer — Speed Characteristics (Representative values)

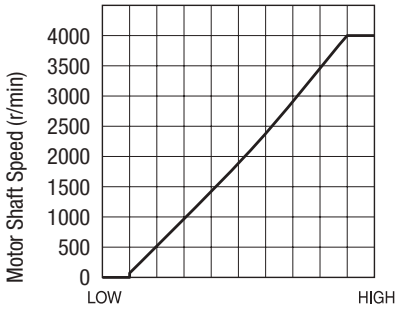


**Note**

- The values correspond to the speed of a stand-alone motor. The rotational speed of the gear output shaft is the value of the rotational speed divided by the gear ratio.

### ◇Setting by an External DC Voltage

Connect the external voltage to the I/O signal connector (CN5) of the driver.

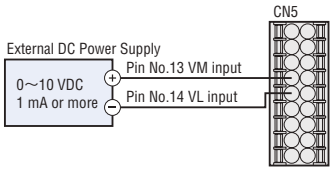


• External Speed Potentiometer — Speed Characteristics (Representative values) Example: For 0～5 VDC

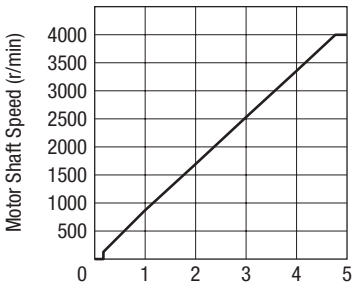


**Note**

- Settings can be made at a voltage of 0～10 VDC.
- The values correspond to the speed of a stand-alone motor. The rotational speed of the gear output shaft is the value of the rotational speed divided by the gear ratio.

### ◇Settings with Support Software (**MEXE02**)

Personal computer in which support software (**MEXE02**) is installed.

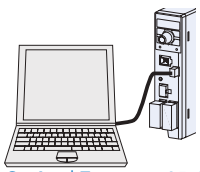

## Multiple Speed Operation (Up to 16 speed)

Select the operation data No. based on the combination of ON/OFF of M0～M3.

| Operation Data No. | M3 | M2 | M1 | M0 |
|---|---|---|---|---|
| 0 | OFF | OFF | OFF | OFF |
| 1 | OFF | OFF | OFF | ON |
| 2 | OFF | OFF | ON | OFF |
| 3 | OFF | OFF | ON | ON |
| 4 | OFF | ON | OFF | OFF |
| 5 | OFF | ON | OFF | ON |
| 6 | OFF | ON | ON | OFF |
| 7 | OFF | ON | ON | ON |
| 8 | ON | OFF | OFF | OFF |
| 9 | ON | OFF | OFF | ON |
| 10 | ON | OFF | ON | OFF |
| 11 | ON | OFF | ON | ON |
| 12 | ON | ON | OFF | OFF |
| 13 | ON | ON | OFF | ON |
| 14 | ON | ON | ON | OFF |
| 15 | ON | ON | ON | ON |

## Multi-Motor Control

By using a potentiometer or external DC voltage, you can operate multiple motors at the same speed.

The figure below is an example in which a Single-Phase power supply is employed. For Three-Phase specifications, use a Three-Phase power supply for the power line. The motor and operation control section are omitted from the figure.

### ◇When a Potentiometer is used

When using a variable resistor (VRx), operate at 20 or less.

Resistance value derived when the No. of drivers is n: VRx=20/n (kΩ), n/4 (W)

Example: When 2 drivers are used

VRx=20/2=10 (kΩ), 2/4=1/2 (W)

The resistance value is 10 kΩ,1/2 W.

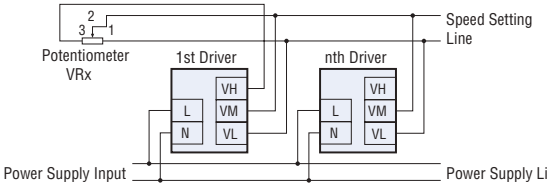


### ◇Using External DC Voltage

Calculate the power supply capacity of the external DC voltage based on the formula below.

Power supply capacity derived when the No. of drivers is n: I=1×n (mA)

Example: When 2 drivers are used

I=1×2=2 (mA)

Therefore, the power supply capacity is at least 2 mA.

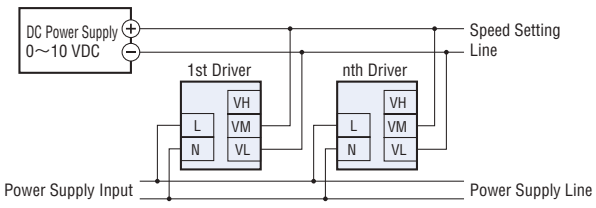

# Installation of Hollow Shaft Load

## Example of Load Shaft Installation Method

The load installation method differs depending on the shape of the load shaft. See the figures below.

- The hollow output shaft is processed to a tolerance of the inner diameter H8, and incorporates a key slot for load shaft installation.
- The recommended tolerance of the load shaft is h7.

**Note**

- To prevent sticking, apply a coat of grease on the exterior surface of the load shaft and interior surface of the hollow output shaft.

### ◇Stepped Load Shaft

**•Fixing Method Using the End Plate**

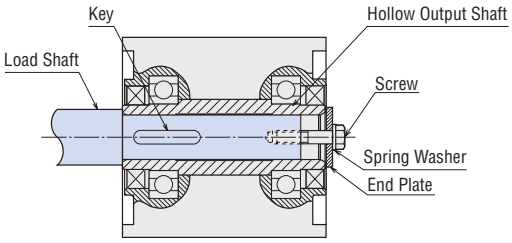


**•Fixing Method Using the Retaining Ring for Hole**

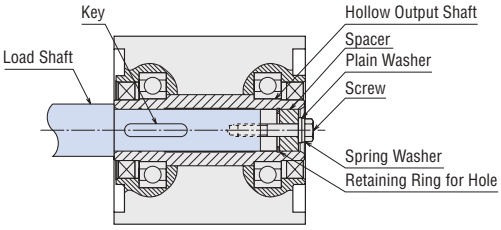


### ◇For Non-Stepped Load Shaft

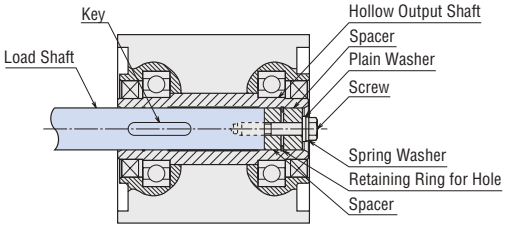


### ◇Recommended Load Shaft Installation Method

Unit: mm

| Output Power | | 60 W | 120 W | 200 W | |
|---|---|---|---|---|---|
| Gear Ratio | | **10~200** | **10~200** | **5~50** | **100, 200** |
| Inner Diameter of Hollow Output Shaft (H8) | | $\phi 12\ ^{+0.027}_{0}$ | $\phi 15\ ^{+0.027}_{0}$ | $\phi 25\ ^{+0.033}_{0}$ | $\phi 30\ ^{+0.033}_{0}$ |
| Recommended Tolerance of Load Shaft (h7) | | $\phi 12\ ^{0}_{-0.018}$ | $\phi 15\ ^{0}_{-0.018}$ | $\phi 25\ ^{0}_{-0.021}$ | $\phi 30\ ^{0}_{-0.021}$ |
| Screw Size | | M5 | M6 | M6 | M8 |
| Spacer Dimensions | Outer Diameter | $\phi$11.5 | $\phi$14.5 | $\phi$24.5 | $\phi$29.5 |
| | Inner Diameter | $\phi$6 | $\phi$7 | $\phi$7 | $\phi$9 |
| | Width | 3 | 3 | 4 | 5 |
| Nominal Hole Diameter of Retaining Ring (C type retaining ring) | | $\phi$12 | $\phi$15 | $\phi$25 | $\phi$30 |
| End Plate Thickness | | 3 | 3 | 4 | 5 |
| Stepped Shaft La length | | 55 | 72 | 96 | 96 |

- Retaining rings for holes, spacers, screws or other parts used to install the load shaft are not supplied.

### ◇Recommended Load Shaft Length

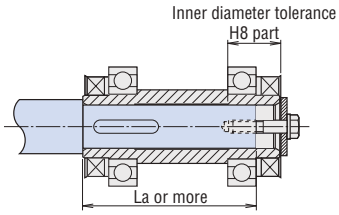

## Permissible Radial Load Calculation of the Hollow Shaft Type

Formulas to calculate permissible radial loads vary depending on the mechanism.

### ◇When One End of the Load Shaft is Not Supported by a Bearing Unit

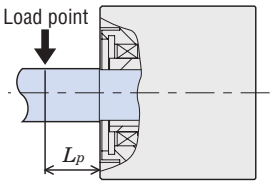


- 60 W

Permissible Radial Load $W$ [N] $= \dfrac{68.5}{48.5+Lp} \times F_0$

- 120 W

Permissible Radial Load $W$ [N] $= \dfrac{79}{59+Lp} \times F_0$

- 200 W (Gear ratio **5**~**50**)

Permissible Radial Load $W$ [N] $= \dfrac{95.5}{75.5+Lp} \times F_0$

- 200 W (Gear ratio **100**, **200**)

Permissible Radial Load $W$ [N] $= \dfrac{102}{82+Lp} \times F_0$

### ◇When One End of the Load Shaft is Supported by a Bearing Unit

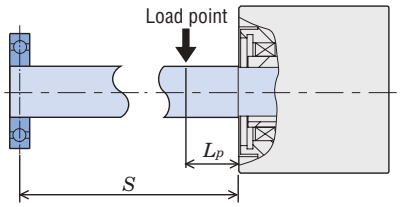


- 60 W

Permissible Radial Load $W$ [N] $= \dfrac{68.5\ (S+5.5)}{53\ (S-Lp)} \times F_0$

- 120 W

Permissible Radial Load $W$ [N] $= \dfrac{79\ (S+4)}{65\ (S-Lp)} \times F_0$

- 200 W (Gear ratio **5**~**50**)

Permissible Radial Load $W$ [N] $= \dfrac{95.5\ (S-9)}{104.5\ (S-Lp)} \times F_0$

- 200 W (Gear ratio **100**, **200**)

Permissible Radial Load $W$ [N] $= \dfrac{102\ (S-9)}{111\ (S-Lp)} \times F_0$

$F_0$ [N]: Permissible radial load when the reference point is at 20 mm from the installation surface

$Lp$ [mm]: Distance from the installation surface to the load point

$S$ [mm]: Distance from the installation surface to the bearing unit

For details on the permissible radial load when the reference position is 20 mm away from the flange installation surface, see the specifications table. ➜ Pages 05-18 and 05-20

# Accessories (Sold Separately)

## Cables

### Cable System Configuration

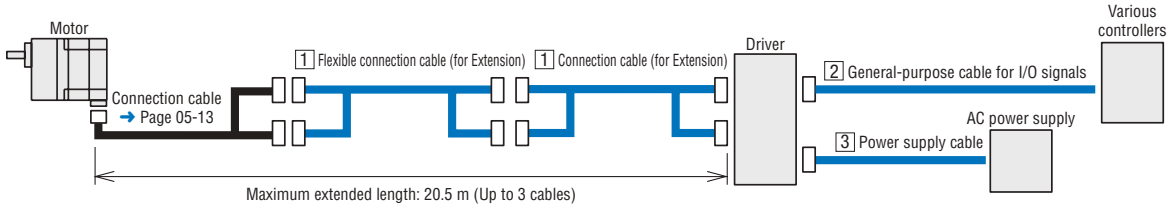


## 1 Connection Cables (for Extension), Flexible Connection Cables (for Extension)

For the extension with additional connection cables (for extension) and/or flexible connection cables (for extension), the total length of the cable must be 20.5 m or less (up to 3 cables).

### Product Line

#### ◇Connection Cables

| Product Name | Length L (m) | List Price |
|---|---|---|
| **CC01BL2** | 1 | SGD38 |
| **CC02BL2** | 2 | SGD53 |
| **CC03BL2** | 3 | SGD68 |
| **CC05BL2** | 5 | SGD98 |
| **CC07BL2** | 7 | SGD128 |
| **CC10BL2** | 10 | SGD173 |

#### ◇Flexible Connection Cables

| Product Name | Length L (m) | List Price |
|---|---|---|
| **CC01BL2R** | 1 | SGD75 |
| **CC02BL2R** | 2 | SGD105 |
| **CC03BL2R** | 3 | SGD135 |
| **CC05BL2R** | 5 | SGD195 |
| **CC07BL2R** | 7 | SGD255 |
| **CC10BL2R** | 10 | SGD345 |

## 2 General-Purpose Cables for I/O Signals

This cable is used for connecting the driver and the programmable controller.

### Product Line

| Product Name | Length L (m) | Number of Lead Line Cores | Outer Diameter D (mm) | AWG | List Price |
|---|---|---|---|---|---|
| **CC06D005B-1** | 0.5 | 6 | ϕ5.4 | 24 | SGD17 |
| **CC06D010B-1** | 1 | | | | SGD19 |
| **CC06D015B-1** | 1.5 | | | | SGD21 |
| **CC06D020B-1** | 2 | | | | SGD23 |
| **CC10D005B-1** | 0.5 | 10 | ϕ6.7 | | SGD19 |
| **CC10D010B-1** | 1 | | | | SGD21 |
| **CC10D015B-1** | 1.5 | | | | SGD24 |
| **CC10D020B-1** | 2 | | | | SGD26 |
| **CC12D005B-1** | 0.5 | 12 | ϕ7.5 | | SGD21 |
| **CC12D010B-1** | 1 | | | | SGD24 |
| **CC12D015B-1** | 1.5 | | | | SGD27 |
| **CC12D020B-1** | 2 | | | | SGD30 |
| **CC16D005B-1** | 0.5 | 16 | ϕ7.5 | | SGD22 |
| **CC16D010B-1** | 1 | | | | SGD25 |
| **CC16D015B-1** | 1.5 | | | | SGD28 |
| **CC16D020B-1** | 2 | | | | SGD31 |

Note

- The general-purpose cable for I/O signals cannot be used together with the external speed potentiometer (**PAVR2-20K**).

## 3 Power Supply Cables

This cable used for connecting the driver and the AC power supply comes with or without a power supply plug.

Plug included

### Product Line

| Product Name | Type | Power Supply Voltage | Length L (m) | List Price |
|---|---|---|---|---|
| **CC01AC03P** | Plug included | Single-Phase 100-120 VAC | 1 | SGD19 |
| **CC02AC03P** | | | 2 | SGD25 |
| **CC03AC03P** | | | 3 | SGD31 |
| **CC01AC03N** | Plug not included | Single-Phase 100-120 VAC Single-Phase 200-240 VAC | 1 | SGD13 |
| **CC02AC03N** | | | 2 | SGD19 |
| **CC03AC03N** | | | 3 | SGD25 |
| **CC01AC04N** | Plug not included | Three-Phase 200-240 VAC | 1 | SGD13 |
| **CC02AC04N** | | | 2 | SGD19 |
| **CC03AC04N** | | | 3 | SGD25 |

For details, check the Oriental Motor website or contact the Oriental Motor sales office.

**http://www.orientalmotor.com.sg/**

## Flexible Couplings

These are clamp type couplings for connecting the motor/gearhead shaft with the driven shaft.
Couplings usable for the parallel shaft gearhead **GFV** gear and the round shaft type are available.

- Couplings can also be used with round shaft types.
  Select a coupling with the same inner diameter size as the motor shaft diameter.

### Product Line

| Applicable Product | Load Type | Coupling Type | List Price |
|---|---|---|---|
| **BLM230** | Uniform Load | **MCL30** Type | SGD61 |
| | Shock Load | | |
| **BLM460** | Uniform Load | **MCL40** Type | SGD93 |
| | Shock Load | **MCL55** Type | SGD124 |
| **BLM5120** | Uniform Load | **MCL55** Type | SGD124 |
| | Shock Load | | |
| **BLM6200**<br>**BLM6400** | Uniform Load | **MCL65** Type | SGD197 |
| | Shock Load | | |

## External Speed Potentiometer

### Features

- Potentiometer which allows the adjustment of rotation speed and torque.
- Easy installation
  Simply insert the potentiometer into the mounting hole. No tools are required. It can be removed.
- Easy wiring
  A terminal block is employed. Lead wire connection or soldering is not required. The efficiency of wiring is improved.

(Front)

(Back)

### Product Line

| Product Name | List Price |
|---|---|
| **PAVR2-20K** | SGD25 |

The following items are included in each product.
External speed potentiometer, operating manual

Note

- The external speed setter (**PAVR2-20K**) cannot be used together with a general-purpose cable for I/O signals.

### Specifications

Resistance: 0~20 kΩ
Rate power: 0.05 W
Resistance change characteristics: B curve

• Applicable Lead Wire Size*
AWG22~18 (0.3~0.75 mm²)
*When combined with the **BLE2** Series

## Motor and Gearhead Mounting Brackets

These are convenient, dedicated mounting brackets for mounting or fixing the parallel shaft gearhead **GFV** gear and the round shaft type.

### Product Line

| Product Name | Applicable Product | List Price |
|---|---|---|
| **SOL2M4F** | **BLM230**, **BLM260** (Round Shaft Type) | SGD24 |
| **SOL4M6F** | **BLM460** (**GFV** Gear) | SGD29 |
| **SOL5M8F** | **BLM5120**, **BLM5200**, **BLM5400** (Round Shaft Type) | SGD31 |
| **SOL6M8F** | **BLM6200**, **BLM6400** (**GFV** Gear) | SGD34 |

Note

When mounting the motor on the mounting bracket, place the motor connector on the top or on the side.
If the connector is placed on the bottom, it interferes with the bracket or the installation surface and therefore is not recommended.

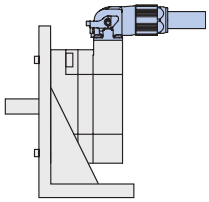

Connector on the Top

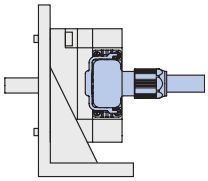

Connector on the Side

## DIN Rail Mounting Bracket

Use the mounting bracket to install the driver to the DIN rail.

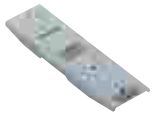

### Product Line

| Product Name | List Price |
|---|---|
| **MADP02** | SGD19 |

## Regeneration Resistor

Use the regeneration resistor to operate the round shaft type (400 W) under inertial load.

### Product Line

| Product Name | List Price |
|---|---|
| **RGB100** | SGD56 |

### Specifications

| | |
|---|---|
| Continuous Regenerative Power | 70 W |
| Instantaneous Regenerative Power | 720 W |
| Resistance Value | 150 Ω |
| Thermostat Operating Temperature | Operation: Open at 150 ± 7°C<br>Reset: Closed at 145 ± 12°C<br>(Normally closed) |

For details, check the Oriental Motor website or contact the Oriental Motor sales office.
**http://www.orientalmotor.com.sg/**

# Torque Arms

Prevents the gearhead from spinning due to reaction force from the driven shaft when a hypoid right-angle hollow shaft **JH** gear is installed.

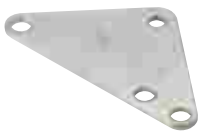

**TAF2S-12-NS**

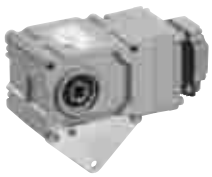

<Application example>

## Product Line

| Product Name | List Price | Applicable Product | Main Specifications |
|---|---|---|---|
| **TAF2S-12-NS** | SGD25 | **BLM460SHPK-4H**□ | Materials: SS400<br>Surface treatment: Trivalent chromate |
| **TAF2S-15-NS** | SGD26 | **BLM5120HPK-5H**□ | |
| **TAF3S-25-2-NS** | SGD33 | **BLM5200HPK-5XH**□ | |
| **TAF3S-30-3-NS** | SGD71 | **BLM5200HPK-5YH**□ | |

● The □ in the applicable product is replaced with a number that represents the gear ratio and a code that represents the output shaft specification.

## Dimensions (Unit: mm)

### ◇TAF2S-12-NS

Mass: 75 g

2D CAD A1608 3D CAD

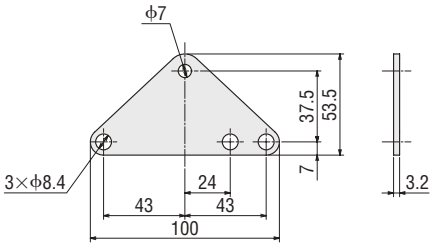


### ◇TAF2S-15-NS

Mass: 125 g

2D CAD A1609 3D CAD

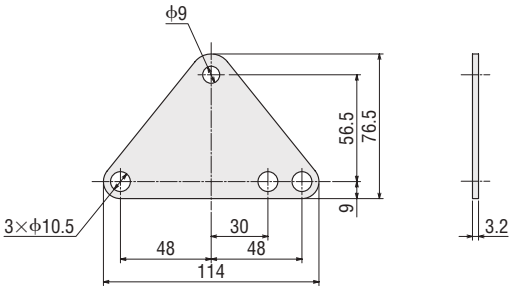


### ◇TAF3S-25-2-NS

Mass: 200 g

2D CAD A1610 3D CAD

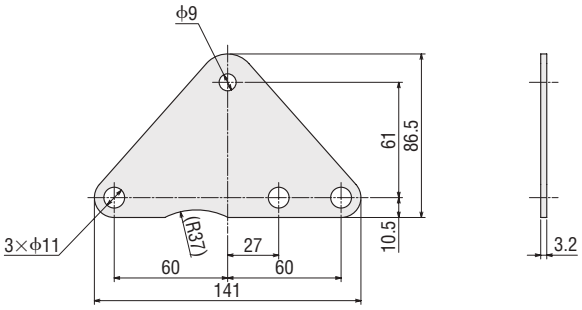


### ◇TAF3S-30-3-NS

Mass: 400 g

2D CAD A1611 3D CAD

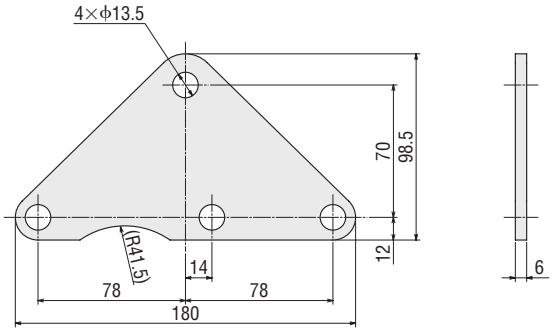


# Motor Covers

Protects the motor. The cover is designed with IP66 protection to ensure use in environments where water or dust disperses.

With a blind cap
**PCM5**

With a cable gland
**PCM5-C**

## Product Line

### ◇Motor Cover

| Product Name | List Price |
|---|---|
| **PCM5** | SGD44 |
| **PCM5-C** | SGD54 |

### ◇Replacement Gaskets

Ideally replace the gaskets after 1 year use.

| Product Name | Set Details |
|---|---|
| **PCMP5** | 2 gaskets |

## Applicable Product

| Output Power | Motor | Cable Drawing Direction |
|---|---|---|
| 30 W<br>60 W<br>120 W | Parallel Shaft Gearhead **GFV** Gear* | Drawing on the output shaft side |
| | Round Shaft Type | Drawing on the counter-output shaft side |

*The parallel shaft gearhead **GFV** gear cannot be used to draw the cable on the counter-output shaft side.

For details, check the Oriental Motor website or contact the Oriental Motor sales office.

**http://www.orientalmotor.com.sg/**

STEPPING MOTORS

# AZ Series

Battery-Free Absolute Sensor Equipped

## New Generation & High Precision Positioning Motors

# αSTEP

# Newly developed ABZO sensor comes with advanced technology is now at affordable price

## Newly Developed **ABZO** Sensor

Oriental Motor has developed a compact, low-cost, and mechanical driven type equipped with absolute sensor that does not require a battery (Patented).

The products offered at affordable prices which can achieve productivity improvement and cost reduction.

Scan me



### Mechanical driven sensor

On an analog clock, the current time is shown by the positions of the second hand, minute hand, and hour hand. The ABZO sensor is a mechanical driven sensor equipped with multiple gears that correspond to the hands of a clock. The sensor recognizes the angle of each gear to detect positional information. Therefore, no batteries are required.

### Multi-rotation absolute sensor

From the reference of home position, the absolute position for ±900 rotations (for 1800 rotations)* of the motor shaft can be detected.

*A frame size of 20 mm or 28 mm (30 mm) is for ±450 rotations (900 rotations).

・The basic principle is derived from an analogue clock

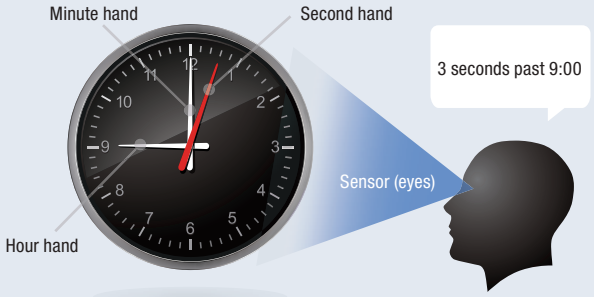


### How to set home position

A home position can easily be set by pressing the switch on the front of the driver, and the ABZO sensor saves the home position. You can also use the support software (**MEXE02**) or external input signals to set a home position.

・Set a home position

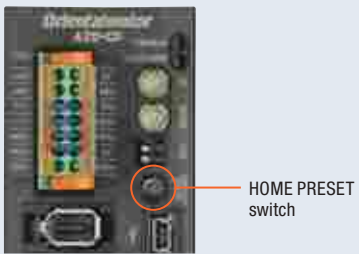

# The absolute system is achieved with battery-free.

## No External Sensor Required

This series uses the absolute system that does not require external sensors such as a home position sensor and limit sensor.

### High-speed return to home + Improvement of accuracy in the return to home position

Since return-to-home operation is enabled without an external sensor, the operation can be performed at a high speed regardless of sensor sensitivity specifications. This reduces the machine cycle time. Returning to the home position is made possible regardless of variations in home sensors, improving the accuracy of the home position.

**Conventional way of detecting the home position of the control motor**

While the limit sensor (±LS) or the home sensor (HOME) is sensed, the home position is detected.

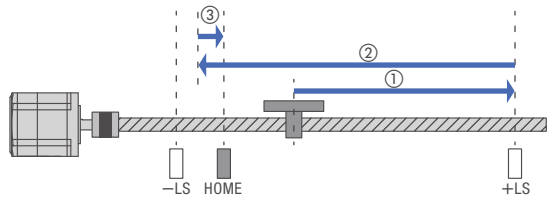


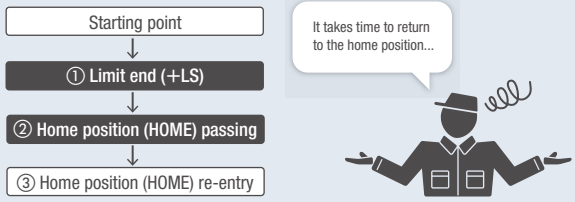


**Return to home operation of the AZ Series**

There is no need to sense the limit sensor, allowing the device to move directly at a high speed to the home position stored in the ABZO sensor.

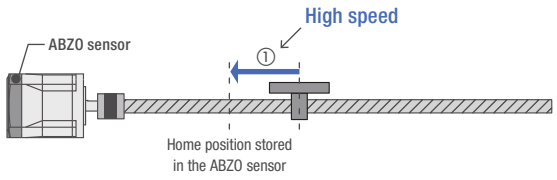


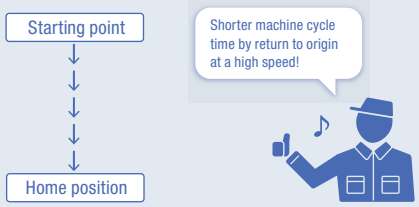


### Cost reduction

The sensor and wiring cost can be reduced, lowering the total system cost.

### Wire saving

Wire saving allows the equipment to design easily.

### The equipment is not affected by malfunction of an external sensor.

You do not have to worry about malfunction, failure, or disconnection of an external sensor (for example, in an environment where metal pieces scatter or oil mist occurs).

- If there is no limit sensor attached, you can use the software limit of the driver to prevent the threshold from being exceeded.

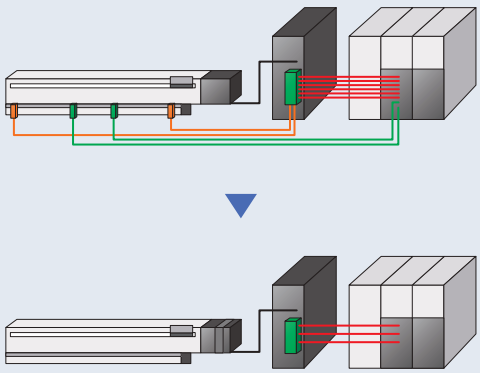

# The absolute system is achieved with battery-free.

## Battery-free

A mechanical driven sensor is used and requires no battery.
The positional information is mechanically managed by the ABZO sensor.

### Keep positional information

The positional information is kept even if power is shut down during positioning operation or the cable between the motor and the driver is removed. When a built-in controller type recovers from an emergency stop of the production line or from a power failure, it can resume positioning operation without returning to the home position.

- Since positional information is kept in the ABZO sensor, the home position must be set again if the motor is replaced.

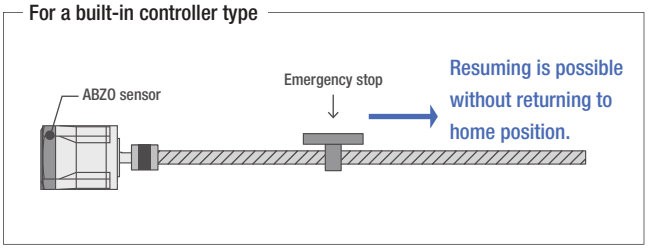


### Less maintenance work

Battery replacement is not required, reducing maintenance work and costs.

### Desired installation of the driver

Not require to ensure space for battery replacement, as the driver can be installed in any location, and a more flexible layout design is available for the control panel and other devices.

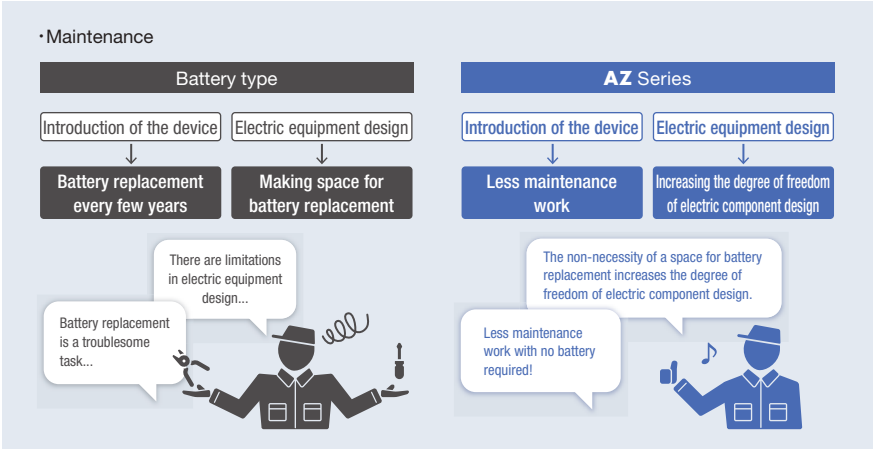


### Trouble-free for overseas transportation

Since batteries discharge by themselves, care must be taken when transported over a long period of time for international or long-distance shipment. The ABZO sensor does not require a battery, and there is no time limitation for positional information retainment. In addition, there is no need to consider the regulations applied to battery export.

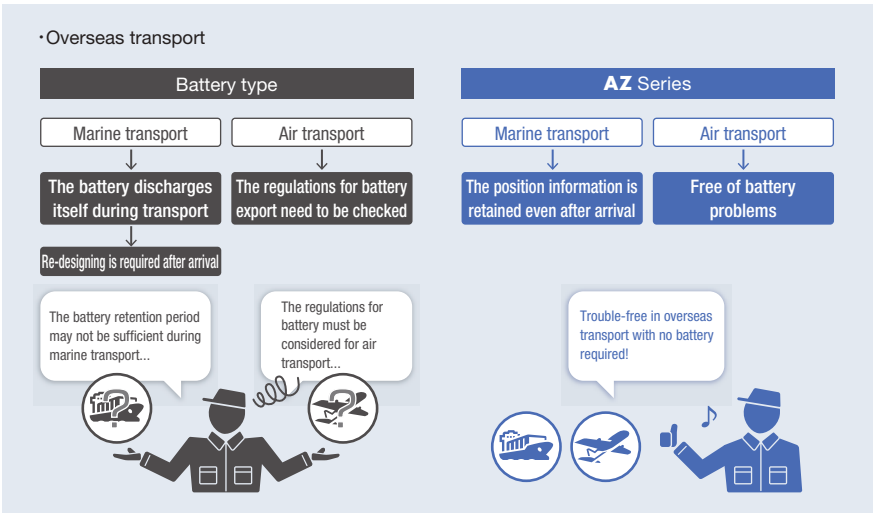

# Energy saving achieved by excellent characteristics, high reliability, and energy saving derived from αSTEP

## Excellent Characteristics and High Reliability

This unit employs the unique control method, achieve high reliability with advantages for both the open loop control and closed loop control.

### Operation continues even at sudden load change or sudden acceleration

At normal times, this compact unit synchronizes with pulse commands and operates with open loop control. When overloaded, the current control immediately changed to the closed loop control and corrects the position.

### In an abnormal condition, an alarm signal is output

If overloaded continuously applied, the unit outputs an alarm signal, and when positioning is completed, the unit outputs a signal. These features provide high reliability.

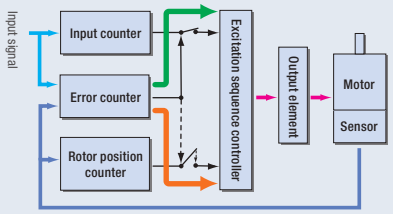


**At normal times (position error: less than ±1.8°)**
As in the case of a stepping motor, control is performed in the open mode.

**Under overload (position error: at least ±1.8°)**
The closed mode is selected to continue operation.

### High response

Utilizing the high response of the stepping motor, the unit can move the device in a short distance for a short time. The unit can move the device by following the command and without delay.

### The stop position is retained without hunting

During positioning, stoppage is done by the retaining force of the motor, without hunting. Therefore, the unit is most suitable for the applications which low-rigidity positioning mechanism is used and vibration should not occur during stoppage.

### No tuning is required

Under normal conditions, this unit operates by open loop control. This enables positioning without gain adjustment even when there is a change in the load of the belt mechanism, chain drive, or other mechanical drives.

### Smooth movement even at a low speed

The micro-step drive and smooth driving functions* are equipped with standard functions suppress vibration at a low speed and smooth movement.

*These functions do not require any change of the pulse input setting but allow the micro-step drive which travel distance and speed are of the same as those of full-step drive.

## Energy Saving and Low Heat Emission

The adoption of the high efficiency motor leads to the reduction of heat emission and power consumption.

### Heat emission drastically reduced

・Thermographic temperature distribution

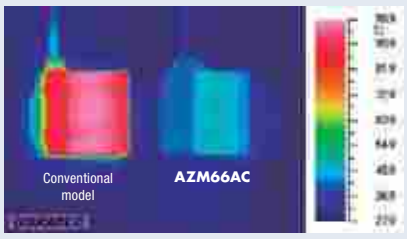


These are the images of operation under the same condition.

・Motor housing temperature at operation under the same condition

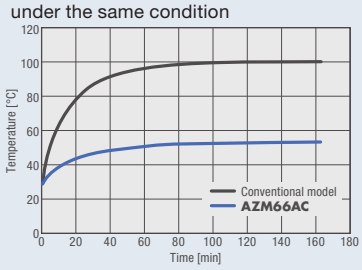


### Power consumption Reduced by 47% compared to the conventional level

・Power consumption

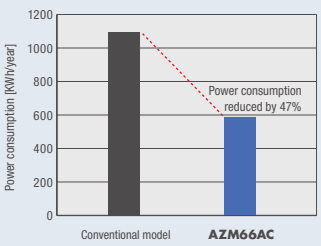


Amount of $CO_2$ emission Reduced by 47% compared to the conventional level

**Operating conditions**
Speed: 1000 r/min, Load factor: 50%
Operating time: 24-hour operation (Operation: 70%, Stand-by: 25%, Stop: 5%); 365 days/year
Power supply voltage: Single-Phase/Three-Phase 200-240 VAC

# Drivers selectable according to the host system

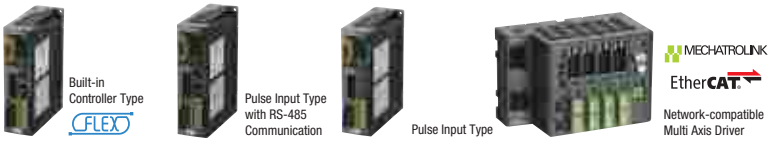


## Built-in Controller Type FLEX AC DC

Sets of data operation in the driver, and selects and executes the operation data from the upper-level system. Connection with and control of the upper-level system are performed by I/O, Modbus (RTU), RS-485 communication, or FA network. By using a network converter (sold separately), the CC-Link communication, MECHATROLINK communication, and EtherCAT communication can be supported.

FLEX is a general term of the products that support I/O control, Modbus (RTU) control, and FA network control via a network converter.

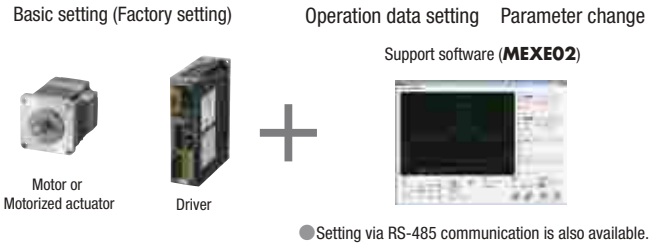


●Setting via RS-485 communication is also available.

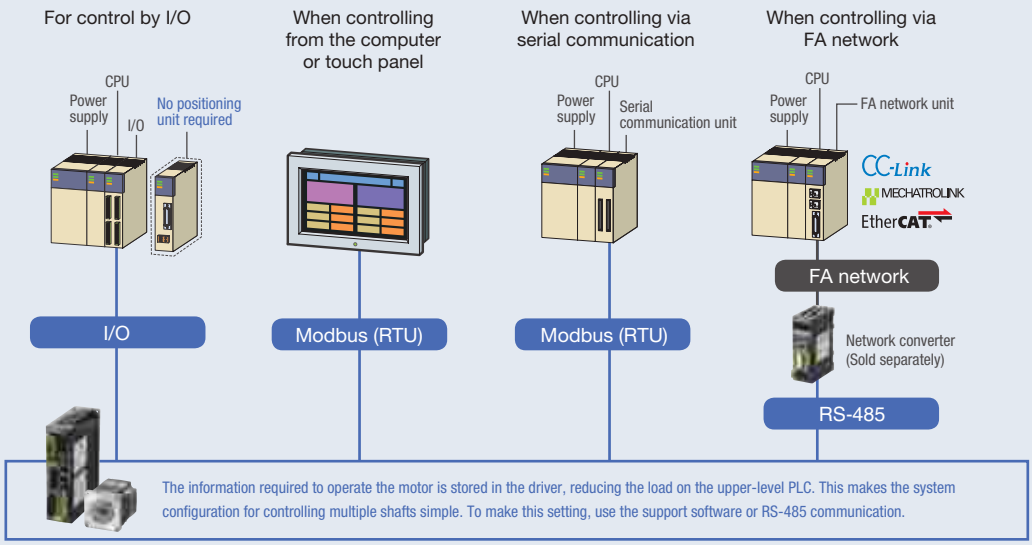


## NEW Pulse Input Type with RS-485 Communication AC DC

It executes operation by inputting pulses to the driver. The motor is controlled from the positioning unit (pulse oscillator) provided by the customer. The use of RS-485 communication allows the monitoring of status information (position, speed, torque, alarms, temperature, etc.) of the motor.

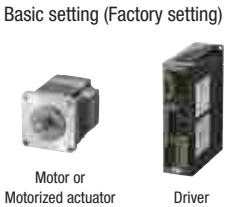


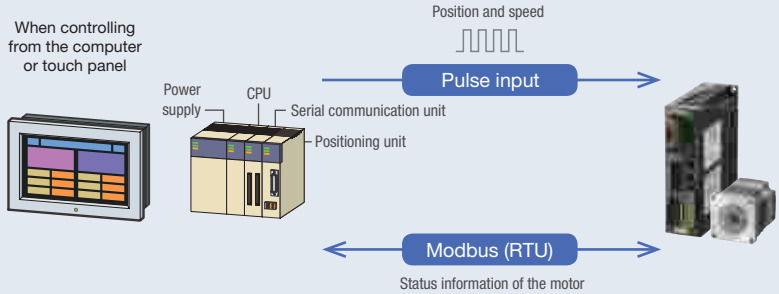


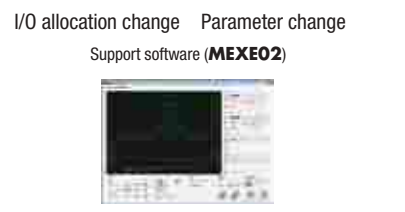


The use of the support software (**MEXE02**) allows the checking of alarm history and the monitoring of various conditions.

## Pulse Input Type AC DC

It executes operation by inputting pulses to the driver. The motor is controlled by the positioning unit (pulse oscillator) provided by the customer. The use of the support software (**MEXE02**) allows the checking of alarm history and the monitoring of various conditions.

Basic setting (Factory setting)

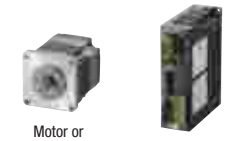

Motor or Motorized actuator　　Driver

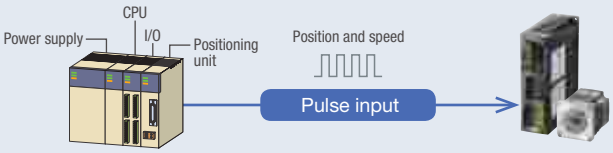


## Network-compatible Multi-Axis Drivers DC

Multi-axis driver that supports MECHATROLINK-III and EtherCAT Drive Profile. The driver can be connected to a DC power supply motor of the **AZ** Series and to a motorized actuator equipped with motor. We provide the drivers to which 2, 3, or 4 axial connectors can be connected.

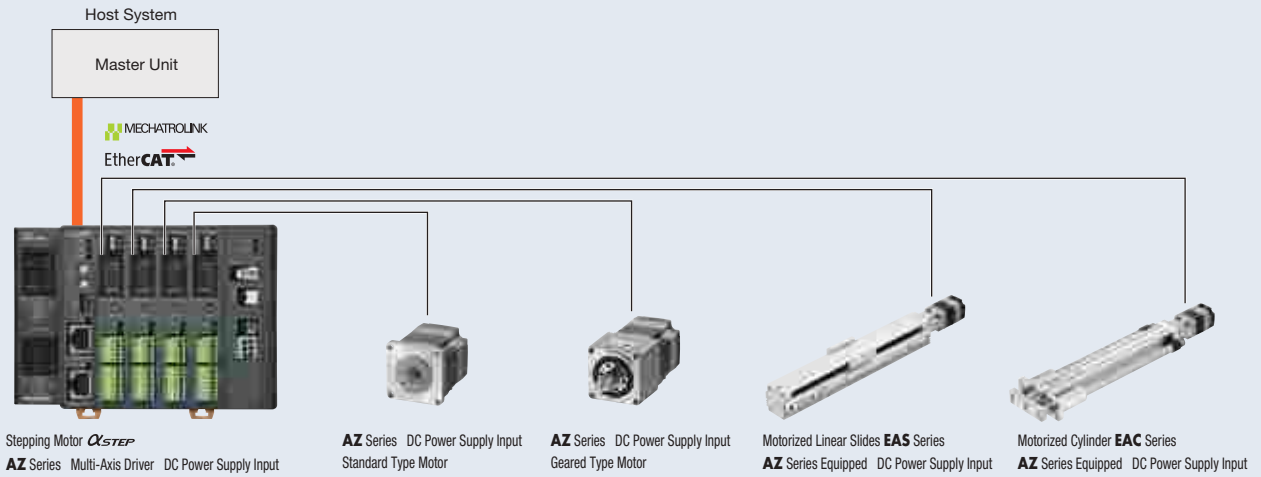


✻The above motors and motorized actuators connected to the stepping motor are representative examples.

- CC-Link and MECHATROLINK are the registered trademarks of the CC-Link Partner Association and the MECHATROLINK Members Association, respectively.
- EtherCAT. is the registered trademark licensed by Beckhoff Automation in Germany.
- The support software (**MEXE02**) can be downloaded from the Oriental Motor website. The media is also available (for free).

# Easy settings and useful functions that are unique to the **AZ** Series.

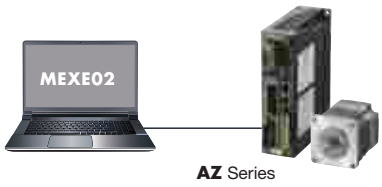


### Support software **MEXE02**

The support software can be downloaded from the Oriental Motor website. The media is also available (for free).

## Easy Settings and Easy Operation

The support software (**MEXE02**) allows you to perform basic settings such as the editing of operation data and the setting of parameters. Furthermore, since the built-in controller type enables sequence control, it can configure a simple system without using a host sequence.

### Unit setting wizard

This function allows you to display/enter the travel distance, speed, or other details in your desired unit. Since data can be input or displayed according to the mechanism used, the function saves labor for unit conversion and allows you to easily input operation data.

### Creating a recovery data file

At first, create a file in which factory settings of the product will be saved in preparation for product replacement due to maintenance or for damage to the product. Be sure to create a recovery data file if you are using a motorized actuator.

### The simplified sequence function simplifies programs

By importing output signals for controlling other equipment or external input signals such as those from sensors, the **AZ** Series can simplify sequence control programs.

- No. of positioning operation data items that can be set (up to 256 points)
- No. of general-purpose I/O points (10 points for input and 6 points for output)
- No. of communication I/O points (16 points for input and 16 points for output)

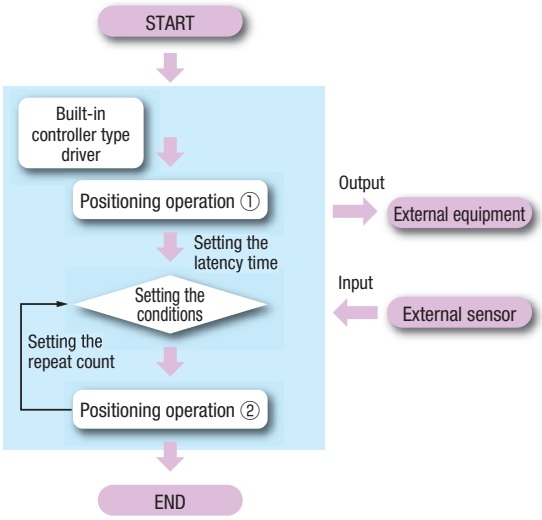


### Tip for the Usage Navigation

Our website contains video which shows useful functions and usage of the $\alpha_{STEP}$ **AZ** Series. We hope you will use the Usage Navigation.

Top
Demo Videos
Category Navigation

or

Oriental Motor Demo Videos Search

https://www.orientalmotor.com.sg/video_det/

# Test Functions

The test functions allows the motor to operate by itself and enables you to check the connection with the host system. The use of these functions during equipment startup can save time.

## Teaching/Remote operation

During startup

From the support software, you can easily set an original point or drive the motor. Before performing connection with the host system, you can perform teaching, test operation, etc. This contributes to the reduction of the equipment startup time.

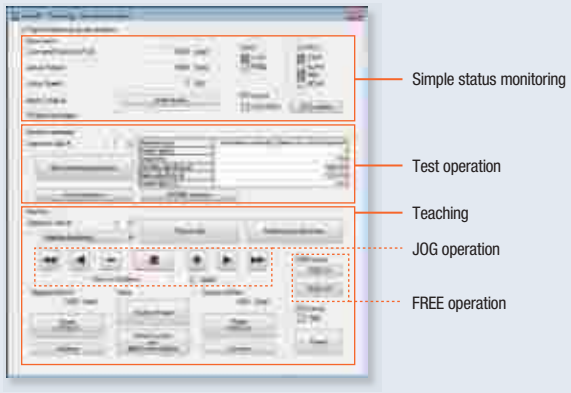


## I/O test

During startup During operation

You can monitor input signals and forcibly output output signals. This is a useful function for checking connection with the host system or the operation of a network I/O.

# Various Monitor Functions

## Waveform monitor

During startup

Similar to using an oscilloscope, the motor drive condition and output signal status can be checked. Use this function when starting up the device or making adjustments.

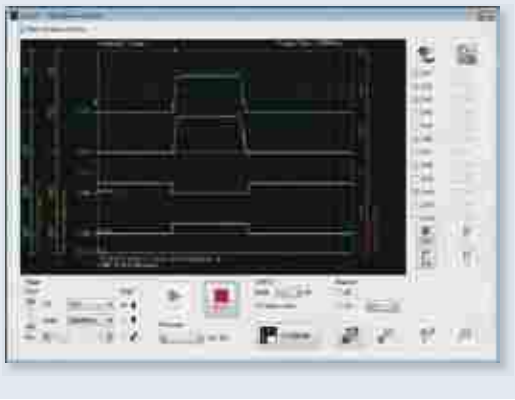

## Alarm monitor

During startup

If an error occurs, you can check the error details, operation conditions at the time of error occurrence, and measures to be taken.

## Status monitoring

During startup

In addition to the speed, motor, driver temperature, and load factor, you can monitor other conditions including rotation amount accumulated from the start of use. Signals can be output for each item as needed, achieving efficient maintenance.

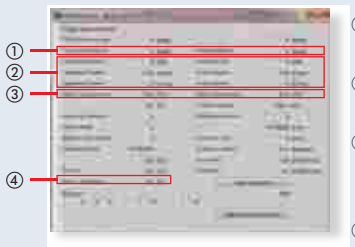


①The actual position is detected for the command position.
②The actual speed is detected for the command speed.
③The temperatures of the encoder of the motor and the inside of the driver are detected.
④This shows the current load factor which is based on the output torque at the speed during rotation. The output torque is assumed to be 100%.

## Compatible with multi monitoring

This function allows you to simultaneously open and use multiple setting screens such as those for data setting, test operation, and monitoring. This function facilitates equipment startup, adjustment, etc.

# **AZ** Series Lineup

AC : Single-Phase 100-120 VAC, Single-Phase/Three-Phase 200-240 VAC input

DC : 24/48 VDC input

## Motors

| Type | | Electromagnetic Brake | Frame Size | | | | |
|---|---|---|---|---|---|---|---|
| | | | 20 mm | 28 mm*6 | 42 mm*2 | 60 mm | 85 mm<br>90 mm*4 |
| Standard | Motor shaft shape<br>Single sided milling/straight/with key | Not equipped | DC *1 | DC *1 | AC DC | AC DC | AC |
| | | Equipped | — | — | AC *3 DC *3 | AC DC | AC *5 |
| Low Backlash | **TS** Geared<br>(Spur gear mechanism)<br>Selection of the cable drawing direction<br>Downward/upward/right/left<br>Low gear ratio, high-speed operation enabled<br>Gear ratio: 3.6, 7.2, 10, 20, 30 | Not equipped | — | — | AC DC | AC DC | AC |
| | | Equipped | — | — | AC DC | AC DC | AC |
| | Right-angle Shaft<br>**FC** Geared<br>(Face gear mechanism)<br>Right-angle shaft gear for positioning<br>Gear ratio: 7.2, 10, 20, 30 | Not equipped | — | — | AC DC | AC DC | — |
| | | Equipped | — | — | AC DC | AC DC | — |
| | **PS** Geared<br>(Planetary gear mechanism)<br>Gear ratio useful for angle indexing<br>Gear ratio: 5, 7.2, 10, 25, 36, 50 | Not equipped | — | NEW DC *1 | AC DC | AC DC | AC |
| | | Equipped | — | — | AC DC | AC DC | AC |
| Non-backlash | **HPG** Geared<br>(HarmonicPlanetary ®)<br>High-precision positioning<br>Gear ratio: 5, 9, 15 | Not equipped | — | — | AC DC | AC DC | AC |
| | | Equipped | — | — | AC DC | AC DC | AC |
| | Harmonic Geared<br>(HarmonicDrive ®)<br>High-precision positioning<br>Gear ratio: 50, 100 | Not equipped | — | NEW DC *1 | AC DC | AC DC | AC |
| | | Equipped | — | — | AC DC | AC DC | AC |

*1 24 VDC only *2 40 mm for the **HPG** geared type *3 **AZM46** only *4 Geared type only *5 **AZM98** only *6 30 mm for the harmonic geared type

**Note**

- The values shown above must be used as reference. These values vary depending on the motor frame size and gear ratio.
- HarmonicPlanetary, HarmonicDrive and HD SYSTEMS are registered trademarks or trademarks of Harmonic Drive Systems Inc.

We offer motors pre-assembled with gears, as variations of stepping motors.
Select an appropriate type from the various geared motors according to the torque, accuracy (backlash) and price.

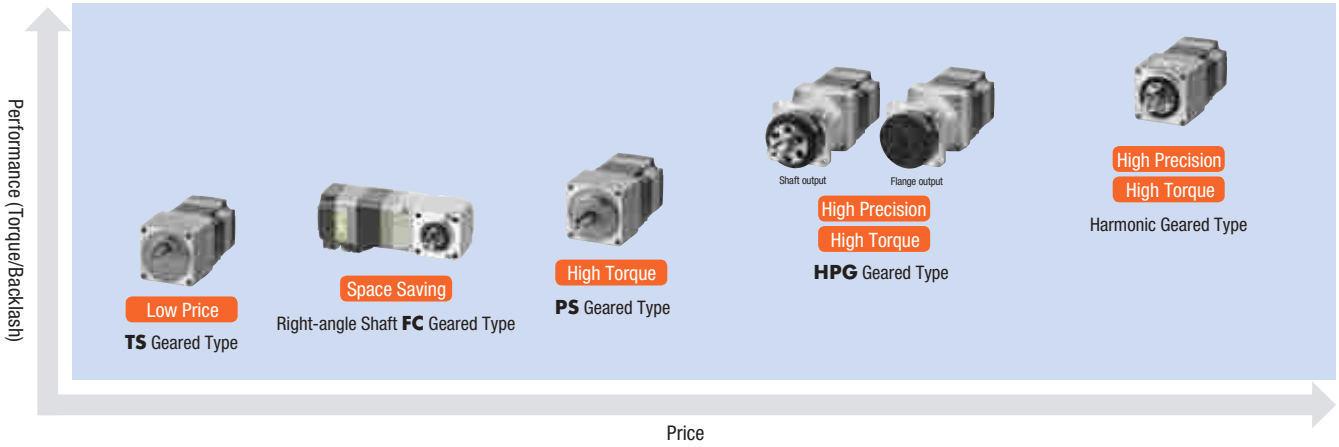

## Drivers

| Permissible Torque/ Maximum Instantaneous Torque [N·m] | Backlash [arcmin] | Basic Resolution [°/Pulse] | Output Shaft Rotation Speed [r/min] | Type |
|---|---|---|---|---|
| Maximum Holding Torque 4 | — | 0.36 | 6000 | Built-in Controller FLEX<br> <br>AC DC |
| Permissible Torque / Maximum Instantaneous Torque 25 45 | 10 | 0.012 | 833 | Pulse Input with RS-485 Communication NEW<br> <br>AC DC |
| Permissible Torque 10.5 | 10 | 0.012 | 416 | |
| Permissible Torque \ Maximum Instantaneous Torque 37 60 | 7 | 0.0072 | 600 | Pulse Input<br> <br>AC DC |
| Permissible Torque \ Maximum Instantaneous Torque 24 33 | 3 | 0.024 | 900 | |
| Permissible Torque \ Maximum Instantaneous Torque 52 107 | 0 | 0.0036 | 70 | Network-compatible Multi Axis Driver<br> <br>DC<br>MECHATROLINK<br>EtherCAT |

● FLEX is a general term of the products that support I/O control, Modbus (RTU) control, and FA network control via a network converter.

● MECHATROLINK is a registered trademark of the MECHATROLINK Members Association. ● EtherCAT is a registered trademark licensed by Beckhoff Automation in Germany.

## You can select the shaft shape and cable drawing direction depending on the application.

Single Sided Milling | Straight | With Key

Downward | Upward | Right | Left

You can select a cable drawing direction from the output shaft from among the 4 directions.

● Standard Type

| Frame Size \ Shaft Shape | Single Sided Milling | NEW Straight | NEW With Key |
|---|---|---|---|
| 20 mm | ● | — | — |
| 28 mm | ● | — | — |
| 42 mm | ● | ● | ●* |
| 60 mm | ● | ● | ● |
| 85 mm | ● | ● | ● |

*AZM48 only

● TS Geared Type

| Frame Size | Cable Drawing Direction | | | |
|---|---|---|---|---|
| | Downward | Upward NEW | Right NEW | Left NEW |
| 42 mm | ● | ● | ● | ● |
| 60 mm | ● | ● | ● | ● |
| 90 mm | ● | ● | ● | ● |

Click Here

For more information, please visit ORIENTAL MOTOR Website:
https://www.orientalmotor.com.sg/om/tp/index.html

# System Configuration

## When a standard type motor with electromagnetic brake is combined with a built-in controller type driver or a pulse input type driver with RS-485 communication

The figure below shows a sample configuration which includes a built-in controller type driver and which uses I/O control or RS-485 communication.
The motor, driver, and connection cable set/flexible connection cable set need to be separately provided.

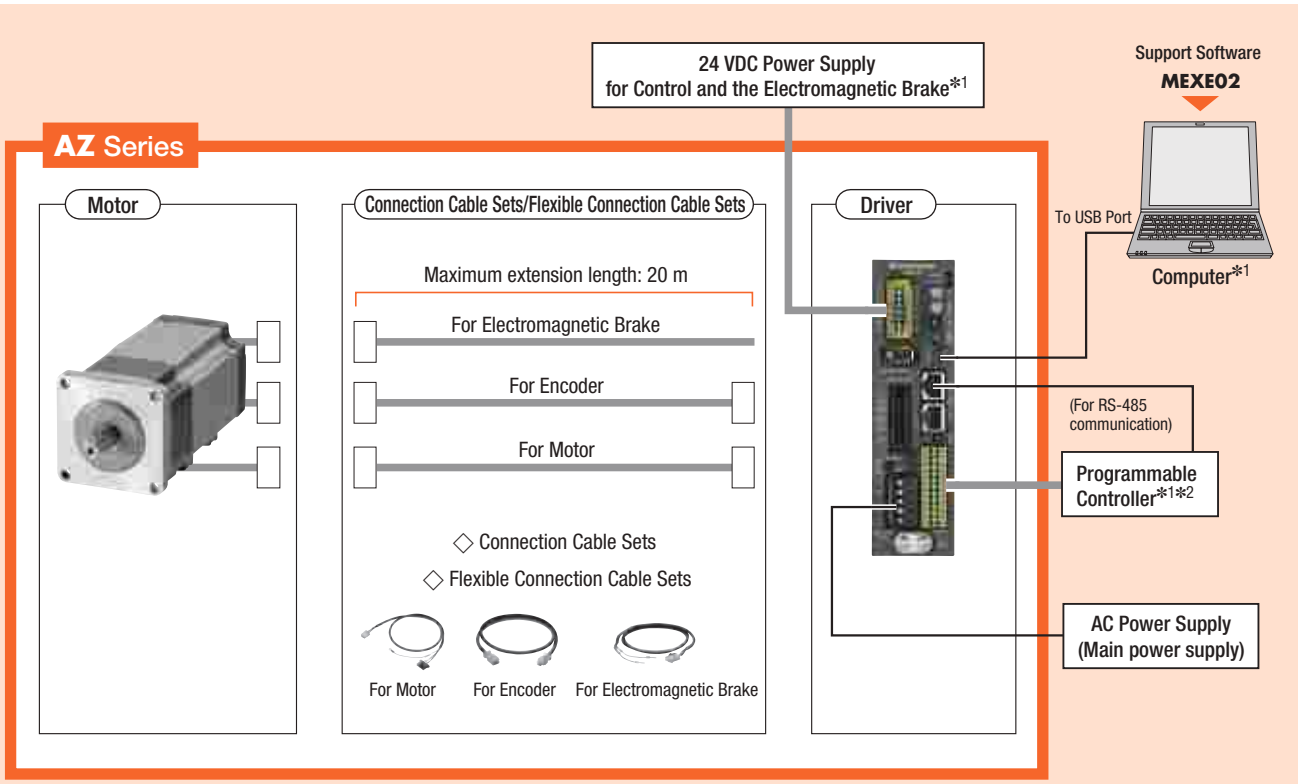


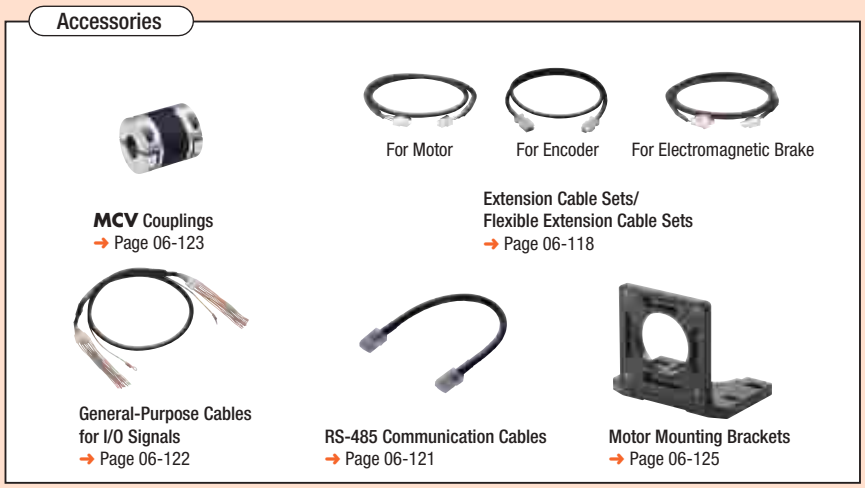


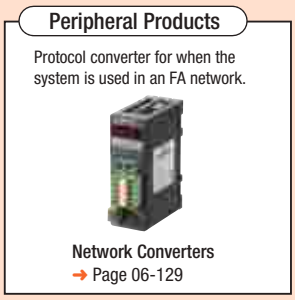


*1 Not supplied.
*2 For a pulse input type with RS-485 communication, a pulse oscillation function is required.

● System Configuration Example

| AZ Series | | | + | Sold Separately | | |
|---|---|---|---|---|---|---|
| Motor | Driver | Connection Cable Sets | | Motor Mounting Brackets | Flexible Couplings | General-Purpose Cable for I/O Signals (1 m) |
| **AZM66MC** | **AZD-CD** | **CC030VZFB** | | **PAL2P-5** | **MCV251010** | **CC16D010B-1** |
| SGD625 | SGD650 | SGD83 | | SGD14 | SGD100 | SGD25 |

● The system configuration shown above is an example. Other combinations are available.

Note

● The motor cable and electromagnetic brake cable from the motor cannot be directly connected to a driver. To connect the motor to the driver, use a connection cable.

## When a standard type motor with electromagnetic brake is combined with a pulse input type driver

The figure below shows a sample configuration of a single axis system which uses a programmable controller (equipped with a pulse oscillator).
The motor, driver, and connection cable set/flexible connection cable set need to be separately provided.

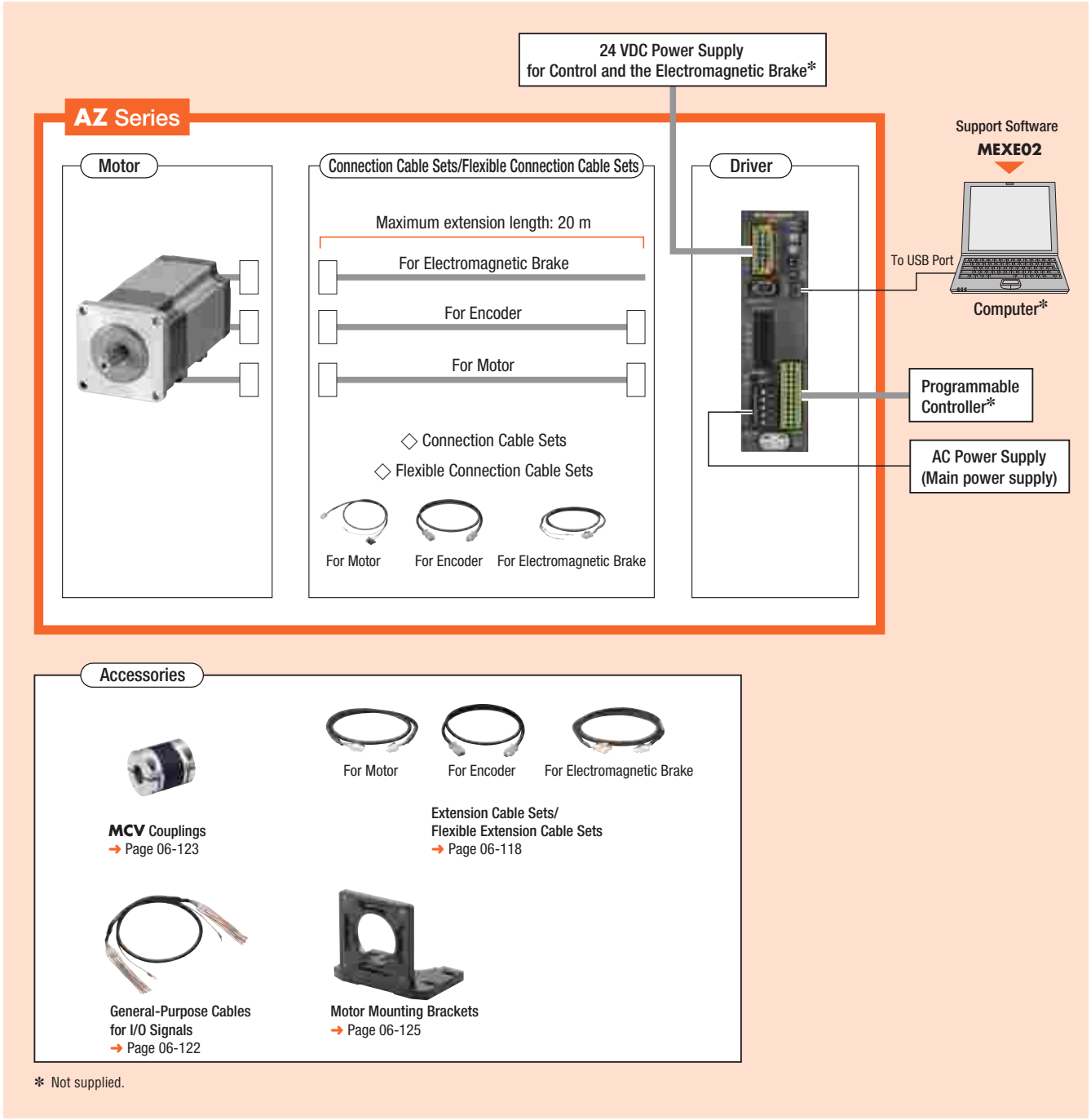


* Not supplied.

### System Configuration Example

| AZ Series | | | + | Sold Separately | | |
|---|---|---|---|---|---|---|
| Motor | Driver | Connection Cable Sets | | Motor Mounting Brackets | Flexible Couplings | General-Purpose Cable for I/O Signals (1 m) |
| **AZM66MC** | **AZD-C** | **CC030VZFB** | | **PAL2P-5** | **MCV251010** | **CC16D010B-1** |
| SGD625 | SGD588 | SGD83 | | SGD14 | SGD100 | SGD25 |

- The system configuration shown above is an example. Other combinations are available.

Note

- The motor cable and electromagnetic brake cable from the motor cannot be directly connected to a driver. To connect the motor to the driver, use a connection cable.

# Product Number Code

## Motors

### ◇Standard Type

**AZM 6 6 A 0 C**

① ② ③ ④ ⑤ ⑥

### ◇PS, HPG, Harmonic Geared Type

**AZM 6 6 A C - HP 15 F**

① ② ③ ④ ⑥ ⑦ ⑧ ⑨

| | | |
|---|---|---|
| ① | Motor Type | **AZM**: **AZ** Series Motor |
| ② | Motor Frame Size | **4**: 42 mm (40 mm for the **HPG** Geared Type)<br>**6**: 60 mm<br>**9**: 85 mm (90 mm for the Geared Type) |
| ③ | Motor Case Length | |
| ④ | Output Shaft Shape | **A**: Single Shaft **M**: With Electromagnetic Brake |
| ⑤ | Additional Function* | **0**: Straight **1**: With Key |
| ⑥ | Motor Specifications | **C**: AC Power Supply Input Specifications |
| ⑦ | Gear Type | **PS**: **PS** Geared Type<br>**HP**: **HPG** Geared Type<br>**HS**: Harmonic Geared Type |
| ⑧ | Gear Ratio | |
| ⑨ | Output Shaft Type | **HPG** Geared Type<br>Blank: Shaft Output **F**: Flange Output |

*When the name of a standard type does not contain a number representing an additional function, it is a single-sided milled type.

### ◇TS Geared Type

**AZM 6 6 A C - TS 7.2 U**

① ② ③ ④ ⑤ ⑥ ⑦ ⑧

| | | |
|---|---|---|
| ① | Motor Type | **AZM**: **AZ** Series Motor |
| ② | Motor Frame Size | **4**: 42 mm<br>**6**: 60 mm<br>**9**: 90 mm |
| ③ | Motor Case Length | |
| ④ | Output Shaft Shape | **A**: Single Shaft **M**: With Electromagnetic Brake |
| ⑤ | Motor Specifications | **C**: AC Power Supply Input Specifications |
| ⑥ | Gear Type | **TS**: **TS** Geared Type |
| ⑦ | Gear Ratio | |
| ⑧ | Cable Drawing Direction | **U**: Upward **L**: Left **R**: Right |

### ◇FC Geared Type

**AZM 6 6 A C - FC 7.2 U A**

① ② ③ ④ ⑤ ⑥ ⑦ ⑧ ⑨

| | | |
|---|---|---|
| ① | Motor Type | **AZM**: **AZ** Series Motor |
| ② | Motor Frame Size | **4**: 42 mm **6**: 60 mm |
| ③ | Motor Case Length | |
| ④ | Output Shaft Shape | **A**: Single Shaft **M**: With Electromagnetic Brake |
| ⑤ | Motor Specifications | **C**: AC Power Supply Input Specifications |
| ⑥ | Gear Type | **FC**: **FC** Geared Type |
| ⑦ | Gear Ratio | |
| ⑧ | Cable Drawing Direction* | **D**: Downward **U**: Upward |
| ⑨ | Identification | **A**: Solid Shaft |

*The cable drawing direction is based on the assumption that the output shaft is at left and the gearhead is at right.

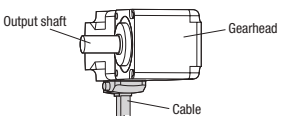

Cable direction downward

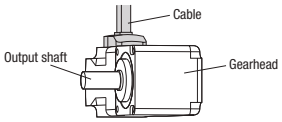

Cable direction upward

## Driver

**AZD - C D**

① ② ③

| | | |
|---|---|---|
| ① | Driver Type | **AZD**: **AZ** Series Driver |
| ② | Power Supply Input | **A**: Single-Phase 100-120 VAC<br>**C**: Single-Phase/Three-Phase 200-240 VAC |
| ③ | Type | **D**: Built-in Controller Type<br>**X**: Pulse Input Type with RS-485 Communication<br>Blank: Pulse Input Type |

## Connection Cable Set/Flexible Connection Cable Set

**CC 050 V Z F B**

① ② ③ ④ ⑤ ⑥

| | | |
|---|---|---|
| ① | | **CC**: Cable |
| ② | Length | **005**: 0.5 m **010**: 1 m **015**: 1.5 m **020**: 2 m<br>**025**: 2.5 m **030**: 3 m **040**: 4 m **050**: 5 m<br>**070**: 7 m **100**: 10 m **150**: 15 m **200**: 20 m |
| ③ | Reference Number | |
| ④ | Applied Model | **Z**: For **AZ** Series |
| ⑤ | Cable Type | **F**: Connection Cable Set<br>**R**: Flexible Connection Cable Set |
| ⑥ | Description | Blank: For the product with no Electromagnetic Brakes<br>**B**: For the product with Electromagnetic Brake |

# Product Line

The motor, driver, and connection cables need to purchase separately.

## Motors

### ◇Standard Type

| Frame Size | Product Name | List Price |
|---|---|---|
| 42 mm | **AZM46AC** | SGD340 |
| | **AZM46A0C** | SGD340 |
| | **AZM48AC** NEW | SGD353 |
| | **AZM48A0C** NEW | SGD353 |
| | **AZM48A1C** NEW | SGD365 |
| 60 mm | **AZM66AC** | SGD400 |
| | **AZM66A0C** | SGD400 |
| | **AZM66A1C** | SGD413 |
| | **AZM69AC** | SGD406 |
| | **AZM69A0C** | SGD406 |
| | **AZM69A1C** | SGD419 |
| 85 mm | **AZM98AC** | SGD431 |
| | **AZM98A0C** | SGD431 |
| | **AZM98A1C** | SGD444 |
| | **AZM911AC** | SGD456 |
| | **AZM911A0C** | SGD456 |
| | **AZM911A1C** | SGD469 |

### ◇Standard Type with Electromagnetic Brake

| Frame Size | Product Name | List Price |
|---|---|---|
| 42 mm | **AZM46MC** | SGD515 |
| | **AZM46M0C** | SGD515 |
| 60 mm | **AZM66MC** | SGD625 |
| | **AZM66M0C** | SGD625 |
| | **AZM66M1C** | SGD638 |
| | **AZM69MC** | SGD631 |
| | **AZM69M0C** | SGD631 |
| | **AZM69M1C** | SGD644 |
| 85 mm | **AZM98MC** | SGD681 |
| | **AZM98M0C** | SGD681 |
| | **AZM98M1C** | SGD694 |

### ◇**TS** Geared Type

| Frame Size | Product Name | List Price |
|---|---|---|
| 42 mm | **AZM46AC-TS3.6** | SGD488 |
| | **AZM46AC-TS3.6R** | SGD488 |
| | **AZM46AC-TS3.6U** | SGD488 |
| | **AZM46AC-TS3.6L** | SGD488 |
| | **AZM46AC-TS7.2** | SGD488 |
| | **AZM46AC-TS7.2R** | SGD488 |
| | **AZM46AC-TS7.2U** | SGD488 |
| | **AZM46AC-TS7.2L** | SGD488 |
| | **AZM46AC-TS10** | SGD505 |
| | **AZM46AC-TS10R** | SGD505 |
| | **AZM46AC-TS10U** | SGD505 |
| | **AZM46AC-TS10L** | SGD505 |
| | **AZM46AC-TS20** | SGD505 |
| | **AZM46AC-TS20R** | SGD505 |
| | **AZM46AC-TS20U** | SGD505 |
| | **AZM46AC-TS20L** | SGD505 |
| | **AZM46AC-TS30** | SGD505 |
| | **AZM46AC-TS30R** | SGD505 |
| | **AZM46AC-TS30U** | SGD505 |
| | **AZM46AC-TS30L** | SGD505 |
| 60 mm | **AZM66AC-TS3.6** | SGD574 |
| | **AZM66AC-TS3.6R** | SGD574 |
| | **AZM66AC-TS3.6U** | SGD574 |
| | **AZM66AC-TS3.6L** | SGD574 |
| | **AZM66AC-TS7.2** | SGD574 |
| | **AZM66AC-TS7.2R** | SGD574 |
| | **AZM66AC-TS7.2U** | SGD574 |
| | **AZM66AC-TS7.2L** | SGD574 |
| | **AZM66AC-TS10** | SGD591 |
| | **AZM66AC-TS10R** | SGD591 |
| | **AZM66AC-TS10U** | SGD591 |
| | **AZM66AC-TS10L** | SGD591 |
| | **AZM66AC-TS20** | SGD591 |
| | **AZM66AC-TS20R** | SGD591 |
| | **AZM66AC-TS20U** | SGD591 |
| | **AZM66AC-TS20L** | SGD591 |
| | **AZM66AC-TS30** | SGD591 |
| | **AZM66AC-TS30R** | SGD591 |
| | **AZM66AC-TS30U** | SGD591 |
| | **AZM66AC-TS30L** | SGD591 |

### ◇**TS** Geared Type with Electromagnetic Brake

| Frame Size | Product Name | List Price |
|---|---|---|
| 42 mm | **AZM46MC-TS3.6** | SGD663 |
| | **AZM46MC-TS3.6R** | SGD663 |
| | **AZM46MC-TS3.6U** | SGD663 |
| | **AZM46MC-TS3.6L** | SGD663 |
| | **AZM46MC-TS7.2** | SGD663 |
| | **AZM46MC-TS7.2R** | SGD663 |
| | **AZM46MC-TS7.2U** | SGD663 |
| | **AZM46MC-TS7.2L** | SGD663 |
| | **AZM46MC-TS10** | SGD680 |
| | **AZM46MC-TS10R** | SGD680 |
| | **AZM46MC-TS10U** | SGD680 |
| | **AZM46MC-TS10L** | SGD680 |
| | **AZM46MC-TS20** | SGD680 |
| | **AZM46MC-TS20R** | SGD680 |
| | **AZM46MC-TS20U** | SGD680 |
| | **AZM46MC-TS20L** | SGD680 |
| | **AZM46MC-TS30** | SGD680 |
| | **AZM46MC-TS30R** | SGD680 |
| | **AZM46MC-TS30U** | SGD680 |
| | **AZM46MC-TS30L** | SGD680 |
| 60 mm | **AZM66MC-TS3.6** | SGD799 |
| | **AZM66MC-TS3.6R** | SGD799 |
| | **AZM66MC-TS3.6U** | SGD799 |
| | **AZM66MC-TS3.6L** | SGD799 |
| | **AZM66MC-TS7.2** | SGD799 |
| | **AZM66MC-TS7.2R** | SGD799 |
| | **AZM66MC-TS7.2U** | SGD799 |
| | **AZM66MC-TS7.2L** | SGD799 |
| | **AZM66MC-TS10** | SGD816 |
| | **AZM66MC-TS10R** | SGD816 |
| | **AZM66MC-TS10U** | SGD816 |
| | **AZM66MC-TS10L** | SGD816 |
| | **AZM66MC-TS20** | SGD816 |
| | **AZM66MC-TS20R** | SGD816 |
| | **AZM66MC-TS20U** | SGD816 |
| | **AZM66MC-TS20L** | SGD816 |
| | **AZM66MC-TS30** | SGD816 |
| | **AZM66MC-TS30R** | SGD816 |
| | **AZM66MC-TS30U** | SGD816 |
| | **AZM66MC-TS30L** | SGD816 |

### ◇**TS** Geared Type

| Frame Size | Product Name | List Price |
|---|---|---|
| 90 mm | **AZM98AC-TS3.6** | SGD634 |
| | **AZM98AC-TS3.6R** | SGD634 |
| | **AZM98AC-TS3.6U** | SGD634 |
| | **AZM98AC-TS3.6L** | SGD634 |
| | **AZM98AC-TS7.2** | SGD634 |
| | **AZM98AC-TS7.2R** | SGD634 |
| | **AZM98AC-TS7.2U** | SGD634 |
| | **AZM98AC-TS7.2L** | SGD634 |
| | **AZM98AC-TS10** | SGD651 |
| | **AZM98AC-TS10R** | SGD651 |
| | **AZM98AC-TS10U** | SGD651 |
| | **AZM98AC-TS10L** | SGD651 |
| | **AZM98AC-TS20** | SGD651 |
| | **AZM98AC-TS20R** | SGD651 |
| | **AZM98AC-TS20U** | SGD651 |
| | **AZM98AC-TS20L** | SGD651 |
| | **AZM98AC-TS30** | SGD651 |
| | **AZM98AC-TS30R** | SGD651 |
| | **AZM98AC-TS30U** | SGD651 |
| | **AZM98AC-TS30L** | SGD651 |

### ◇**TS** Geared Type with Electromagnetic Brake

| Frame Size | Product Name | List Price |
|---|---|---|
| 90 mm | **AZM98MC-TS3.6** | SGD884 |
| | **AZM98MC-TS3.6R** | SGD884 |
| | **AZM98MC-TS3.6U** | SGD884 |
| | **AZM98MC-TS3.6L** | SGD884 |
| | **AZM98MC-TS7.2** | SGD884 |
| | **AZM98MC-TS7.2R** | SGD884 |
| | **AZM98MC-TS7.2U** | SGD884 |
| | **AZM98MC-TS7.2L** | SGD884 |
| | **AZM98MC-TS10** | SGD901 |
| | **AZM98MC-TS10R** | SGD901 |
| | **AZM98MC-TS10U** | SGD901 |
| | **AZM98MC-TS10L** | SGD901 |
| | **AZM98MC-TS20** | SGD901 |
| | **AZM98MC-TS20R** | SGD901 |
| | **AZM98MC-TS20U** | SGD901 |
| | **AZM98MC-TS20L** | SGD901 |
| | **AZM98MC-TS30** | SGD901 |
| | **AZM98MC-TS30R** | SGD901 |
| | **AZM98MC-TS30U** | SGD901 |
| | **AZM98MC-TS30L** | SGD901 |

### ◇**FC** Geared Type

| Frame Size | Product Name | List Price |
|---|---|---|
| 42 mm | **AZM46AC-FC7.2UA** | SGD646 |
| | **AZM46AC-FC7.2DA** | SGD646 |
| | **AZM46AC-FC10UA** | SGD646 |
| | **AZM46AC-FC10DA** | SGD646 |
| | **AZM46AC-FC20UA** | SGD646 |
| | **AZM46AC-FC20DA** | SGD646 |
| | **AZM46AC-FC30UA** | SGD646 |
| | **AZM46AC-FC30DA** | SGD646 |
| 60 mm | **AZM66AC-FC7.2UA** | SGD769 |
| | **AZM66AC-FC7.2DA** | SGD769 |
| | **AZM66AC-FC10UA** | SGD769 |
| | **AZM66AC-FC10DA** | SGD769 |
| | **AZM66AC-FC20UA** | SGD769 |
| | **AZM66AC-FC20DA** | SGD769 |
| | **AZM66AC-FC30UA** | SGD769 |
| | **AZM66AC-FC30DA** | SGD769 |

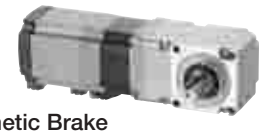

### ◇**FC** Geared Type with Electromagnetic Brake

| Frame Size | Product Name | List Price |
|---|---|---|
| 42 mm | **AZM46MC-FC7.2UA** | SGD821 |
| | **AZM46MC-FC7.2DA** | SGD821 |
| | **AZM46MC-FC10UA** | SGD821 |
| | **AZM46MC-FC10DA** | SGD821 |
| | **AZM46MC-FC20UA** | SGD821 |
| | **AZM46MC-FC20DA** | SGD821 |
| | **AZM46MC-FC30UA** | SGD821 |
| | **AZM46MC-FC30DA** | SGD821 |
| 60 mm | **AZM66MC-FC7.2UA** | SGD994 |
| | **AZM66MC-FC7.2DA** | SGD994 |
| | **AZM66MC-FC10UA** | SGD994 |
| | **AZM66MC-FC10DA** | SGD994 |
| | **AZM66MC-FC20UA** | SGD994 |
| | **AZM66MC-FC20DA** | SGD994 |
| | **AZM66MC-FC30UA** | SGD994 |
| | **AZM66MC-FC30DA** | SGD994 |

### ◇**PS** Geared Type

| Frame Size | Product Name | List Price |
|---|---|---|
| 42 mm | **AZM46AC-PS5** | SGD628 |
| | **AZM46AC-PS7.2** | SGD628 |
| | **AZM46AC-PS10** | SGD628 |
| | **AZM46AC-PS25** | SGD690 |
| | **AZM46AC-PS36** | SGD690 |
| | **AZM46AC-PS50** | SGD690 |
| 60 mm | **AZM66AC-PS5** | SGD750 |
| | **AZM66AC-PS7.2** | SGD750 |
| | **AZM66AC-PS10** | SGD750 |
| | **AZM66AC-PS25** | SGD838 |
| | **AZM66AC-PS36** | SGD838 |
| | **AZM66AC-PS50** | SGD838 |
| 90 mm | **AZM98AC-PS5** | SGD869 |
| | **AZM98AC-PS7.2** | SGD869 |
| | **AZM98AC-PS10** | SGD869 |
| | **AZM98AC-PS25** | SGD1,019 |
| | **AZM98AC-PS36** | SGD1,019 |
| | **AZM98AC-PS50** | SGD1,019 |

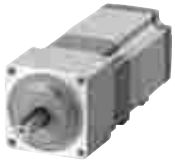

### ◇**PS** Geared Type with Electromagnetic Brake

| Frame Size | Product Name | List Price |
|---|---|---|
| 42 mm | **AZM46MC-PS5** | SGD803 |
| | **AZM46MC-PS7.2** | SGD803 |
| | **AZM46MC-PS10** | SGD803 |
| | **AZM46MC-PS25** | SGD865 |
| | **AZM46MC-PS36** | SGD865 |
| | **AZM46MC-PS50** | SGD865 |
| 60 mm | **AZM66MC-PS5** | SGD975 |
| | **AZM66MC-PS7.2** | SGD975 |
| | **AZM66MC-PS10** | SGD975 |
| | **AZM66MC-PS25** | SGD1,063 |
| | **AZM66MC-PS36** | SGD1,063 |
| | **AZM66MC-PS50** | SGD1,063 |
| 90 mm | **AZM98MC-PS5** | SGD1,119 |
| | **AZM98MC-PS7.2** | SGD1,119 |
| | **AZM98MC-PS10** | SGD1,119 |
| | **AZM98MC-PS25** | SGD1,269 |
| | **AZM98MC-PS36** | SGD1,269 |
| | **AZM98MC-PS50** | SGD1,269 |

### ◇**HPG** Geared Type

| Frame Size | Product Name | List Price |
|---|---|---|
| 40 mm | **AZM46AC-HP5** | SGD740 |
| | **AZM46AC-HP5F** | SGD728 |
| | **AZM46AC-HP9** | SGD740 |
| | **AZM46AC-HP9F** | SGD728 |
| 60 mm | **AZM66AC-HP5** | SGD1,000 |
| | **AZM66AC-HP5F** | SGD981 |
| | **AZM66AC-HP15** | SGD1,184 |
| | **AZM66AC-HP15F** | SGD1,165 |
| 90 mm | **AZM98AC-HP5** | SGD1,260 |
| | **AZM98AC-HP5F** | SGD1,235 |
| | **AZM98AC-HP15** | SGD1,399 |
| | **AZM98AC-HP15F** | SGD1,374 |

### ◇**HPG** Geared Type with Electromagnetic Brake

| Frame Size | Product Name | List Price |
|---|---|---|
| 40 mm | **AZM46MC-HP5** | SGD915 |
| | **AZM46MC-HP5F** | SGD903 |
| | **AZM46MC-HP9** | SGD915 |
| | **AZM46MC-HP9F** | SGD903 |
| 60 mm | **AZM66MC-HP5** | SGD1,225 |
| | **AZM66MC-HP5F** | SGD1,206 |
| | **AZM66MC-HP15** | SGD1,409 |
| | **AZM66MC-HP15F** | SGD1,390 |
| 90 mm | **AZM98MC-HP5** | SGD1,510 |
| | **AZM98MC-HP5F** | SGD1,485 |
| | **AZM98MC-HP15** | SGD1,649 |
| | **AZM98MC-HP15F** | SGD1,624 |

### ◇Harmonic Geared Type

| Frame Size | Product Name | List Price |
|---|---|---|
| 42 mm | **AZM46AC-HS50** | SGD996 |
| | **AZM46AC-HS100** | SGD996 |
| 60 mm | **AZM66AC-HS50** | SGD1,344 |
| | **AZM66AC-HS100** | SGD1,344 |
| 90 mm | **AZM98AC-HS50** | SGD1,613 |
| | **AZM98AC-HS100** | SGD1,613 |

### ◇Harmonic Geared Type with Electromagnetic Brake

| Frame Size | Product Name | List Price |
|---|---|---|
| 42 mm | **AZM46MC-HS50** | SGD1,171 |
| | **AZM46MC-HS100** | SGD1,171 |
| 60 mm | **AZM66MC-HS50** | SGD1,569 |
| | **AZM66MC-HS100** | SGD1,569 |
| 90 mm | **AZM98MC-HS50** | SGD1,863 |
| | **AZM98MC-HS100** | SGD1,863 |

## ●Drivers

### ◇Built-in Controller Type

| Power Supply Input | Product Name | List Price |
|---|---|---|
| Single-Phase 100-120 VAC | **AZD-AD** | SGD650 |
| Single-Phase/Three-Phase 200-240 VAC | **AZD-CD** | SGD650 |

### ◇Pulse Input Type

| Power Supply Input | Product Name | List Price |
|---|---|---|
| Single-Phase 100-120 VAC | **AZD-A** | SGD588 |
| Single-Phase/Three-Phase 200-240 VAC | **AZD-C** | SGD588 |

### ◇Pulse Input Type with RS-485 Communication NEW

| Power Supply Input | Product Name | List Price |
|---|---|---|
| Single-Phase 100-120 VAC | **AZD-AX** | SGD650 |
| Single-Phase/Three-Phase 200-240 VAC | **AZD-CX** | SGD650 |

## Connection Cable Sets/Flexible Connection Cable Sets

Use a flexible connection cable set if the cable will be bent repeatedly. We provide connection cables and flexible extension cables that can be connected to connection cables for extension. See page 06-118.

The motor cable and electromagnetic brake cable from the motor cannot be directly connected to a driver. To connect the motor to the driver, use a connection cable.

For Motor For Encoder

### ◇For the product with no Electromagnetic Brakes

| Type | Length L (m) | Product Name | List Price |
|---|---|---|---|
| Connection Cable Set | 0.5 | **CC005VZF** | SGD38 |
| | 1 | **CC010VZF** | SGD38 |
| | 1.5 | **CC015VZF** | SGD44 |
| | 2 | **CC020VZF** | SGD50 |
| | 2.5 | **CC025VZF** | SGD56 |
| | 3 | **CC030VZF** | SGD63 |
| | 4 | **CC040VZF** | SGD98 |
| | 5 | **CC050VZF** | SGD110 |
| | 7 | **CC070VZF** | SGD136 |
| | 10 | **CC100VZF** | SGD176 |
| | 15 | **CC150VZF** | SGD244 |
| | 20 | **CC200VZF** | SGD310 |
| Flexible Connection Cable Set | 0.5 | **CC005VZR** | SGD84 |
| | 1 | **CC010VZR** | SGD84 |
| | 1.5 | **CC015VZR** | SGD92 |
| | 2 | **CC020VZR** | SGD99 |
| | 2.5 | **CC025VZR** | SGD106 |
| | 3 | **CC030VZR** | SGD111 |
| | 4 | **CC040VZR** | SGD126 |
| | 5 | **CC050VZR** | SGD141 |
| | 7 | **CC070VZR** | SGD180 |
| | 10 | **CC100VZR** | SGD236 |
| | 15 | **CC150VZR** | SGD333 |
| | 20 | **CC200VZR** | SGD426 |

For Motor For Encoder For Electromagnetic Brake

### ◇For the product with Electromagnetic Brakes

| Type | Length L (m) | Product Name | List Price |
|---|---|---|---|
| Connection Cable Set | 0.5 | **CC005VZFB** | SGD53 |
| | 1 | **CC010VZFB** | SGD53 |
| | 1.5 | **CC015VZFB** | SGD60 |
| | 2 | **CC020VZFB** | SGD68 |
| | 2.5 | **CC025VZFB** | SGD75 |
| | 3 | **CC030VZFB** | SGD83 |
| | 4 | **CC040VZFB** | SGD121 |
| | 5 | **CC050VZFB** | SGD135 |
| | 7 | **CC070VZFB** | SGD166 |
| | 10 | **CC100VZFB** | SGD214 |
| | 15 | **CC150VZFB** | SGD294 |
| | 20 | **CC200VZFB** | SGD373 |
| Flexible Connection Cable Set | 0.5 | **CC005VZRB** | SGD114 |
| | 1 | **CC010VZRB** | SGD114 |
| | 1.5 | **CC015VZRB** | SGD124 |
| | 2 | **CC020VZRB** | SGD134 |
| | 2.5 | **CC025VZRB** | SGD143 |
| | 3 | **CC030VZRB** | SGD151 |
| | 4 | **CC040VZRB** | SGD171 |
| | 5 | **CC050VZRB** | SGD191 |
| | 7 | **CC070VZRB** | SGD240 |
| | 10 | **CC100VZRB** | SGD311 |
| | 15 | **CC150VZRB** | SGD433 |
| | 20 | **CC200VZRB** | SGD551 |

# Accessories

## Motors

| Type \ Accessories | | Parallel Key | Motor Installation Screws | Operating Manual |
|---|---|---|---|---|
| Standard Type | | — | — | 1 set |
| **TS** Geared Type | Frame Size 42 mm | — | — | |
| | Frame Size 60 mm | 1 piece | M4×60 P0.7 (4 pieces) | |
| | Frame Size 90 mm | 1 piece | M8×90 P1.25 (4 pieces) | |
| **FC** Geared Type | | 1 piece | — | |
| **PS** Geared Type | | 1 piece | — | |
| **HPG** Geared Type | Shaft Output | 1 piece | — | |
| | Flange Output | — | — | |
| Harmonic Geared Type | | 1 piece | — | |

For the details of the functions and operation methods of the product, refer to the Operating Manual (Functions). The Operating Manual for Functions does not come with the product. Contact the nearest Oriental Motor sales office, or download the Operating Manual from the Oriental Motor website.

## Drivers

| Type \ Accessories | Connector | Operating Manual |
|---|---|---|
| For All Types | ・Connector for CN4 (1 piece)<br>・Connector for CN1 (1 piece)<br>・Connector for CN5 (1 piece)<br>・Connector Wiring Lever (1 piece) | 1 set |

## Connection Cable Sets/Flexible Connection Cable Sets

| Type \ Accessories | Operating Manual |
|---|---|
| Connection Cable Sets | — |
| Flexible Connection Cable Sets | 1 set |

## Estimate of Output from Stepping Motors

As for output (W) from an AC servo motor, the output (W) generated during rotation at the "Rated Speed" is expressed as the "Rated Output".
On the other hand, stepping motors which feature high-precision positioning and high torque in medium and low-speed areas do not have any rated speed. Therefore, there is no expression of "Rated Output". The table below shows the correspondence between the torque of each **AZ** Series standard type motor and the corresponding rated torque W of an applicable servo motor.

| **AZ** Series (Standard type) | | Servo motor with Corresponding Rated Torque (Estimate) |
|---|---|---|
| Frame Size | Product Name | |
| 42 mm | **AZM46** | Corresponds to a rated torque of 50～100 W |
| | **AZM48** | |
| 60 mm | **AZM66** | Corresponds to a rated torque of 100～200 W |
| | **AZM69** | Corresponds to a rated torque of 200～400 W |
| 85 mm | **AZM98** | Corresponds to a rated torque of 400～750 W |
| | **AZM911** | |

✻These are samples of total prices of a motor, driver, and 1 m connection cable.

● Frame Size 42 mm

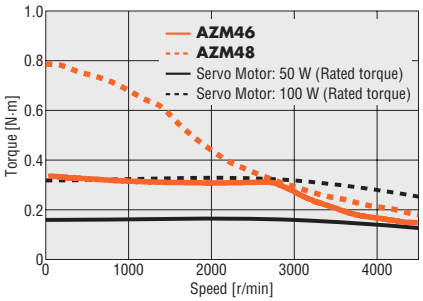


● Frame Size 60 mm

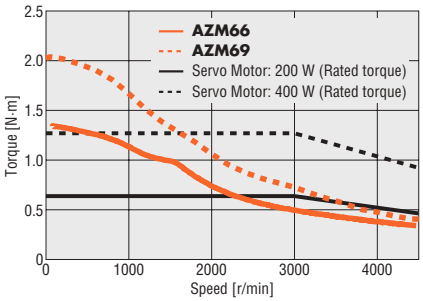


● Frame Size 85 mm

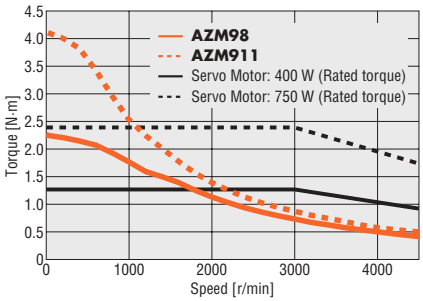


● The speed–torque characteristics shows the data based on the company's measurement conditions. If conditions change, the characteristics may change.

# Standard Type Frame Size 42 mm, 60 mm, 85 mm

Lineup Added

## Specifications

| Motor Product Name | | AZM46A□C | AZM48A□C | AZM66A□C | AZM69A□C | AZM98A□C | AZM911A□C |
|---|---|---|---|---|---|---|---|
| | With Electromagnetic Brake | AZM46M□C | — | AZM66M□C | AZM69M□C | AZM98M□C | — |
| Driver Product Name | Built-in Controller | AZD-AD (Single-Phase 100-120 VAC), AZD-CD (Single-Phase/Three-Phase 200-240 VAC) | | | | | |
| | Pulse Input with RS-485 Communication | AZD-AX (Single-Phase 100-120 VAC), AZD-CX (Single-Phase/Three-Phase 200-240 VAC) | | | | | |
| | Pulse Input | AZD-A (Single-Phase 100-120 VAC), AZD-C (Single-Phase/Three-Phase 200-240 VAC) | | | | | |
| Maximum Holding Torque N·m | | 0.3 | 0.77 | 1.2 | 2 | 2 | 4 |
| Holding Torque at Motor Standstill | Power ON N·m | 0.15 | 0.38 | 0.6 | 1 | 1 | 2 |
| | Electromagnetic Brake N·m | 0.15 | — | 0.6 | 1 | 1 | — |
| Rotor Inertial J: kg·m² | | $55\times10^{-7}$ ($71\times10^{-7}$)*1 | $115\times10^{-7}$ | $370\times10^{-7}$ ($530\times10^{-7}$)*1 | $740\times10^{-7}$ ($900\times10^{-7}$)*1 | $1090\times10^{-7}$ ($1250\times10^{-7}$)*1 | $2200\times10^{-7}$ |
| Resolution | Resolution Setting: 1000 P/R | 0.36°/Pulse | | | | | |
| Power Supply Input | Voltage and Frequency | Single-Phase 100-120 VAC, Single-Phase/Three-Phase 200-240 VAC −15~+6% 50/60 Hz | | | | | |
| | Input Current A: Single-Phase 100-120 VAC | 2.7 | 2.7 | 3.8 | 5.4 | 5.5 | 6.4 |
| | Input Current A: Single-Phase 200-240 VAC | 1.7 | 1.6 | 2.3 | 3.3 | 3.3 | 3.9 |
| | Input Current A: Three-Phase 200-240 VAC | 1.0 | 1.0 | 1.4 | 2.0 | 2.0 | 2.3 |
| Control Power Source | | 24 VDC ±5%*2 0.25 A (0.33 A)*1 | 24 VDC ±5% 0.25 A | 24 VDC ±5%*2 0.25 A (0.5 A)*1 | | | |

- Either **0** (Straight) or **1** (With a key) indicating the configuration is entered where the box □ is located within the product name. (For **AZM46**, straight only)
  For single-sided milling, no character is entered into the □ mark.
- For details of the standards, check the Oriental Motor website.

*1 The values in the ( ) are those measured when a motor with electromagnetic brake is connected.

*2 For the electromagnetic brake type, the 24 VDC±4% specification applies if the wiring distance between the motor and driver is extended by 20 m using a cable.

## Speed – Torque Characteristics (Reference values)

**AZM46**

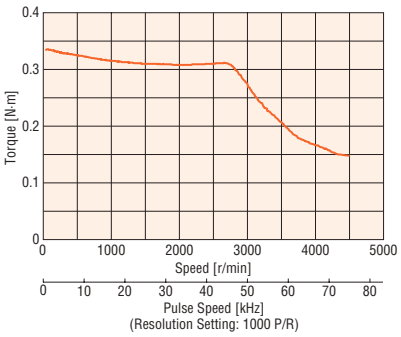


**AZM48**

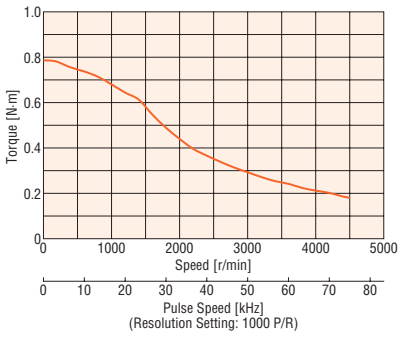


**AZM66**

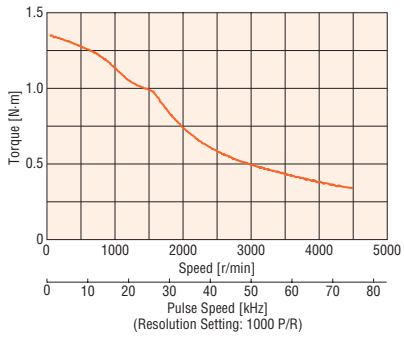


**AZM69**

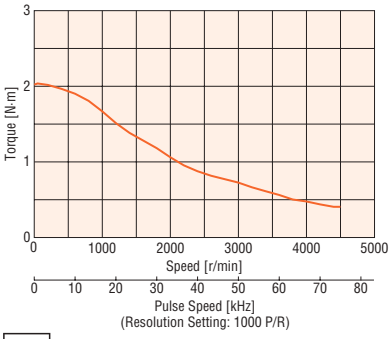


**AZM98**

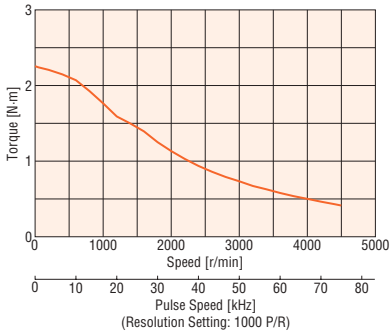


**AZM911**

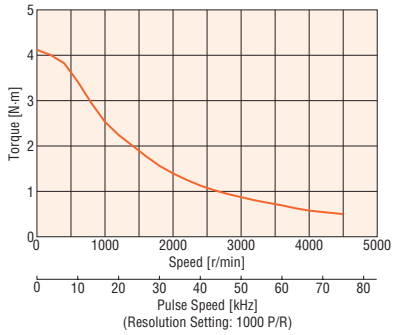


Note

- The speed–torque characteristics shows the data based on the company's measurement conditions. If conditions change, the characteristics may change.
- Depending on the driving conditions, a considerable amount of heat may be generated by the motor. To protect the ABZO sensor, ensure that the motor case temperature is 80°C or less.
  (When conforming to the UL Standards, it is required to keep the temperature of the motor case at 75°C or less, since the motor is recognized as insulation class A.)

## Descriptions of the Terms on the Specification Table

| | |
|---|---|
| Maximum Holding Torque | : The maximum holding torque (holding force) of the motor when power (rated current) is being supplied but the motor shaft is at standstill. (With geared types, the permissible strength of the gear is given consideration for this value.) |
| Permissible Torque | : The maximum value of the torque that can be continuously applied on the output gear shaft. |
| Maximum Instantaneous Torque | : This is the maximum torque value that can be applied to the output gear shaft during acceleration/deceleration like when an inertial load is started and stopped. |
| Holding Torque at Motor Standstill | Power ON : Holding torque when the automatic current cutback function is active.<br>Electromagnetic Brake : Static friction torque when the electromagnetic brake is activated at standstill. (Electromagnetic brake is power off activated type.) |

# TS Geared Type Frame Size 42 mm

## Specifications

| | | | | | | | |
|---|---|---|---|---|---|---|---|
| Motor Product Name | Single Shaft | | **AZM46AC-TS3.6**□ | **AZM46AC-TS7.2**□ | **AZM46AC-TS10**□ | **AZM46AC-TS20**□ | **AZM46AC-TS30**□ |
| | With Electromagnetic Brake | | **AZM46MC-TS3.6**□ | **AZM46MC-TS7.2**□ | **AZM46MC-TS10**□ | **AZM46MC-TS20**□ | **AZM46MC-TS30**□ |
| Driver Product Name | Built-in Controller | | **AZD-AD** (Single-Phase 100-120 VAC), **AZD-CD** (Single-Phase/Three-Phase 200-240 VAC) | | | | |
| | Pulse Input with RS-485 Communication | | **AZD-AX** (Single-Phase 100-120 VAC), **AZD-CX** (Single-Phase/Three-Phase 200-240 VAC) | | | | |
| | Pulse Input | | **AZD-A** (Single-Phase 100-120 VAC), **AZD-C** (Single-Phase/Three-Phase 200-240 VAC) | | | | |
| Maximum Holding Torque | | N·m | 0.65 | 1.2 | 1.7 | 2 | 2.3 |
| Rotor Inertial | | J: kg·m$^2$ | $55\times10^{-7}$ ($71\times10^{-7}$)*1 | | | | |
| Gear Ratio | | | 3.6 | 7.2 | 10 | 20 | 30 |
| Resolution | Resolution Setting: 1000 P/R | | 0.1°/Pulse | 0.05°/Pulse | 0.036°/Pulse | 0.018°/Pulse | 0.012°/Pulse |
| Permissible Torque | | N·m | 0.65 | 1.2 | 1.7 | 2 | 2.3 |
| Maximum Instantaneous Torque | | N·m | 0.85 | 1.6 | 2 | 3 | |
| Holding Torque at Motor Standstill | Power ON | N·m | 0.54 | 1 | 1.5 | 1.9 | 2.2 |
| | Electromagnetic Brake | N·m | 0.54 | 1 | 1.5 | 1.9 | 2.2 |
| Speed Range | | r/min | 0～833 | 0～416 | 0～300 | 0～150 | 0～100 |
| Backlash | | arcmin | 45 (0.75°) | 25 (0.42°) | | 15 (0.25°) | |
| Power Supply Input | Voltage and Frequency | | Single-Phase 100-120 VAC, Single-Phase/Three-Phase 200-240 VAC −15～+6% 50/60 Hz | | | | |
| | Input Current A | Single-Phase 100-120 VAC | 2.7 | | | | |
| | | Single-Phase 200-240 VAC | 1.7 | | | | |
| | | Three-Phase 200-240 VAC | 1.0 | | | | |
| Control Power Source | | | 24 VDC ±5%*2 0.25 A (0.33 A)*1 | | | | |

- The □ mark in the product name is replaced by **R** (Right), **U** (Upward), or **L** (Left) which shows the cable drawing direction. For the downward direction, no character is entered into the □ mark.
- For details of the standards, check the Oriental Motor website.

*1 The values in the ( ) are those measured when a motor with electromagnetic brake is connected.

*2 For the electromagnetic brake type, the 24 VDC±4% specification applies if the wiring distance between the motor and driver is extended by 20 m using a cable.

## Speed – Torque Characteristics (Reference values)

**AZM46** Gear Ratio **3.6**

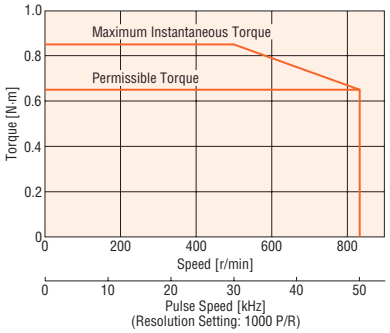


**AZM46** Gear Ratio **7.2**

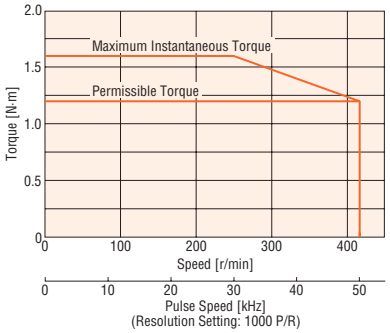


**AZM46** Gear Ratio **10**

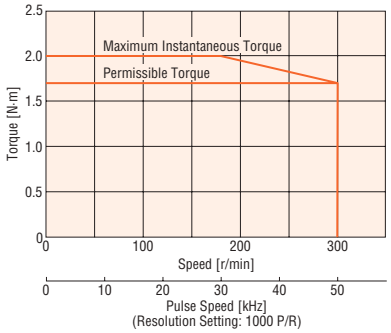


**AZM46** Gear Ratio **20**

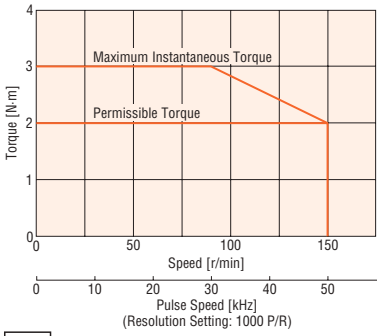


**AZM46** Gear Ratio **30**

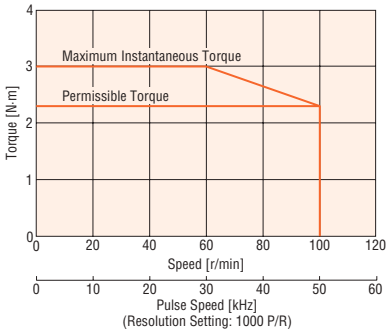


Note

- The speed–torque characteristics shows the data based on the company's measurement conditions. If conditions change, the characteristics may change.
- Depending on the driving conditions, a considerable amount of heat may be generated by the motor. To protect the ABZO sensor, ensure that the motor case temperature is 80°C or less. (When conforming to the UL Standards, it is required to keep the temperature of the motor case at 75°C or less, since the motor is recognized as insulation class A.)

# TS Geared Type Frame Size 60 mm

## Specifications

| | | | | | | | |
|---|---|---|---|---|---|---|---|
| Motor Product Name | Single Shaft | **AZM66AC-TS3.6□** | **AZM66AC-TS7.2□** | **AZM66AC-TS10□** | **AZM66AC-TS20□** | **AZM66AC-TS30□** |
| | With Electromagnetic Brake | **AZM66MC-TS3.6□** | **AZM66MC-TS7.2□** | **AZM66MC-TS10□** | **AZM66MC-TS20□** | **AZM66MC-TS30□** |
| Driver Product Name | Built-in Controller | **AZD-AD** (Single-Phase 100-120 VAC), **AZD-CD** (Single-Phase/Three-Phase 200-240 VAC) | | | | |
| | Pulse Input with RS-485 Communication | **AZD-AX** (Single-Phase 100-120 VAC), **AZD-CX** (Single-Phase/Three-Phase 200-240 VAC) | | | | |
| | Pulse Input | **AZD-A** (Single-Phase 100-120 VAC), **AZD-C** (Single-Phase/Three-Phase 200-240 VAC) | | | | |
| Maximum Holding Torque | N·m | 1.8 | 3 | 4 | 5 | 6 |
| Rotor Inertial | J: kg·m$^2$ | $370\times10^{-7}$ ($530\times10^{-7}$)✻1 | | | | |
| Gear Ratio | | 3.6 | 7.2 | 10 | 20 | 30 |
| Resolution | Resolution Setting: 1000 P/R | 0.1°/Pulse | 0.05°/Pulse | 0.036°/Pulse | 0.018°/Pulse | 0.012°/Pulse |
| Permissible Torque | N·m | 1.8 | 3 | 4 | 5 | 6 |
| Maximum Instantaneous Torque✻ | N·m | ✻ | 4.5 | 6 | 8 | 10 |
| Holding Torque at Motor Standstill | Power ON N·m | 1.3 | 2.6 | 3.7 | 5 | 6 |
| | Electromagnetic Brake N·m | 1.3 | 2.6 | 3.7 | 5 | 6 |
| Speed Range | r/min | 0～833 | 0～416 | 0～300 | 0～150 | 0～100 |
| Backlash | arcmin | 35 (0.59°) | 15 (0.25°) | | 10 (0.17°) | |
| Power Supply Input | Voltage and Frequency | Single-Phase 100-120 VAC, Single-Phase/Three-Phase 200-240 VAC −15～+6% 50/60 Hz | | | | |
| | Input Current A: Single-Phase 100-120 VAC | 3.8 | | | | |
| | Input Current A: Single-Phase 200-240 VAC | 2.3 | | | | |
| | Input Current A: Three-Phase 200-240 VAC | 1.4 | | | | |
| Control Power Source | | 24 VDC ±5%✻2 0.25 A (0.5 A)✻1 | | | | |

✻ For the geared motor output torque, refer to the Speed – Torque Characteristics.

● The □ mark in the product name is replaced by **R** (Right), **U** (Upward), or **L** (Left) which shows the cable drawing direction. For the downward direction, no character is entered into the □ mark.

● For details of the standards, check the Oriental Motor website.

✻1 The values in the ( ) are those measured when a motor with electromagnetic brake is connected.

✻2 For the electromagnetic brake type, the 24 VDC±4% specification applies if the wiring distance between the motor and driver is extended by 20 m using a cable.

## Speed – Torque Characteristics (Reference values)

**AZM66** Gear Ratio **3.6**

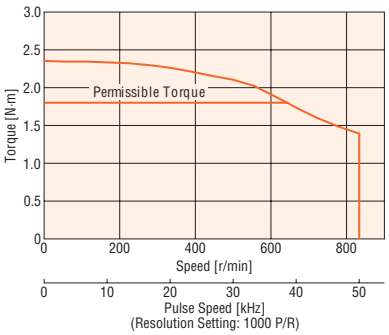


**AZM66** Gear Ratio **7.2**

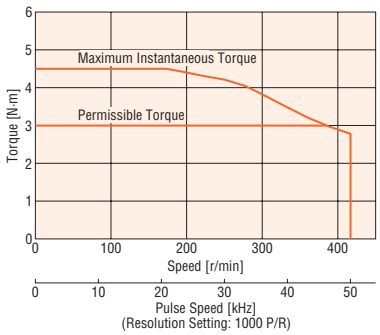


**AZM66** Gear Ratio **10**

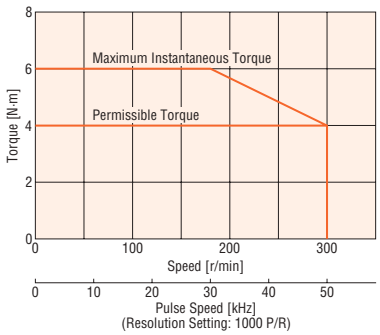


**AZM66** Gear Ratio **20**

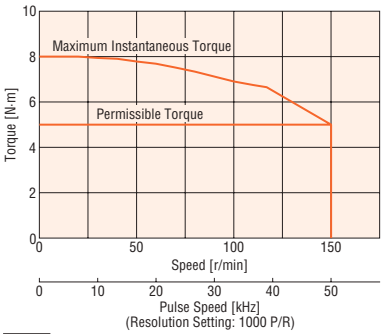


**AZM66** Gear Ratio **30**

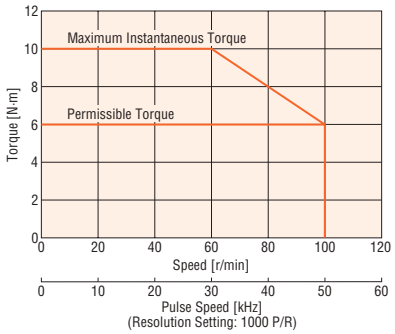


Note

● The speed–torque characteristics shows the data based on the company's measurement conditions. If conditions change, the characteristics may change.

● Depending on the driving conditions, a considerable amount of heat may be generated by the motor. To protect the ABZO sensor, ensure that the motor case temperature is 80°C or less. (When conforming to the UL Standards, it is required to keep the temperature of the motor case at 75°C or less, since the motor is recognized as insulation class A.)

# TS Geared Type Frame Size 90 mm

## Specifications

| | | | | | | | |
|---|---|---|---|---|---|---|---|
| Motor Product Name | Single Shaft | **AZM98AC-TS3.6□** | **AZM98AC-TS7.2□** | **AZM98AC-TS10□** | **AZM98AC-TS20□** | **AZM98AC-TS30□** |
| | With Electromagnetic Brake | **AZM98MC-TS3.6□** | **AZM98MC-TS7.2□** | **AZM98MC-TS10□** | **AZM98MC-TS20□** | **AZM98MC-TS30□** |
| Driver Product Name | Built-in Controller | **AZD-AD** (Single-Phase 100-120 VAC), **AZD-CD** (Single-Phase/Three-Phase 200-240 VAC) | | | | |
| | Pulse Input with RS-485 Communication | **AZD-AX** (Single-Phase 100-120 VAC), **AZD-CX** (Single-Phase/Three-Phase 200-240 VAC) | | | | |
| | Pulse Input | **AZD-A** (Single-Phase 100-120 VAC), **AZD-C** (Single-Phase/Three-Phase 200-240 VAC) | | | | |
| Maximum Holding Torque | N·m | 6 | 10 | 14 | 20 | 25 |
| Rotor Inertial | J: kg·m$^2$ | $1090\times10^{-7}$ ($1250\times10^{-7}$)*1 | | | | |
| Gear Ratio | | 3.6 | 7.2 | 10 | 20 | 30 |
| Resolution | Resolution Setting: 1000 P/R | 0.1°/Pulse | 0.05°/Pulse | 0.036°/Pulse | 0.018°/Pulse | 0.012°/Pulse |
| Permissible Torque | N·m | 6 | 10 | 14 | 20 | 25 |
| Maximum Instantaneous Torque* | N·m | * | * | 20 | * | 45 |
| Holding Torque at Motor Standstill | Power ON N·m | 3.6 | 7.2 | 10 | 20 | 25 |
| | Electromagnetic Brake N·m | 3.6 | 7.2 | 10 | 20 | 25 |
| Speed Range | r/min | 0～833 | 0～416 | 0～300 | 0～150 | 0～100 |
| Backlash | arcmin | 25 (0.42°) | 15 (0.25°) | | 10 (0.17°) | |
| Power Supply Input | Voltage and Frequency | Single-Phase 100-120 VAC, Single-Phase/Three-Phase 200-240 VAC −15～+6% 50/60 Hz | | | | |
| | Input Current A: Single-Phase 100-120 VAC | 5.5 | | | | |
| | Input Current A: Single-Phase 200-240 VAC | 3.3 | | | | |
| | Input Current A: Three-Phase 200-240 VAC | 2.0 | | | | |
| Control Power Source | | 24 VDC ±5%*2 0.25 A (0.5 A)*1 | | | | |

* For the geared motor output torque, refer to the Speed – Torque Characteristics.
- The □ mark in the product name is replaced by **R** (Right), **U** (Upward), or **L** (Left) which shows the cable drawing direction. For the downward direction, no character is entered into the □ mark.
- For details of the standards, check the Oriental Motor website.

*1 The values in the ( ) are those measured when a motor with electromagnetic brake is connected.
*2 For the electromagnetic brake type, the 24 VDC±4% specification applies if the wiring distance between the motor and driver is extended by 20 m using a cable.

## Speed – Torque Characteristics (Reference values)

**AZM98** Gear Ratio **3.6**

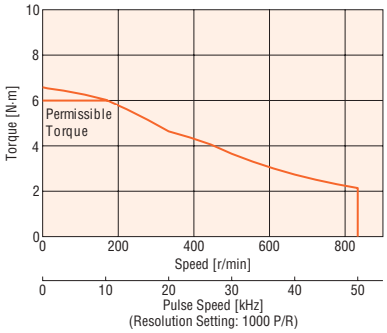


**AZM98** Gear Ratio **7.2**

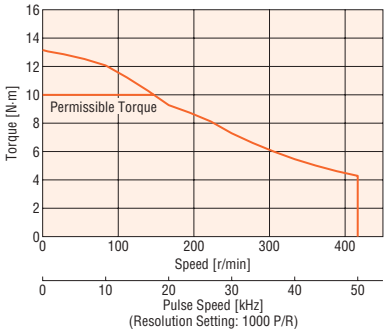


**AZM98** Gear Ratio **10**

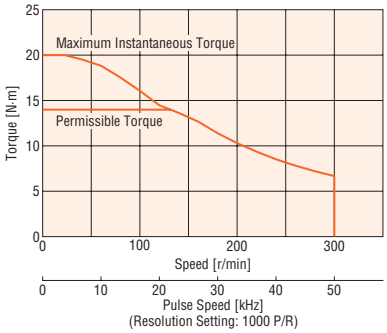


**AZM98** Gear Ratio **20**

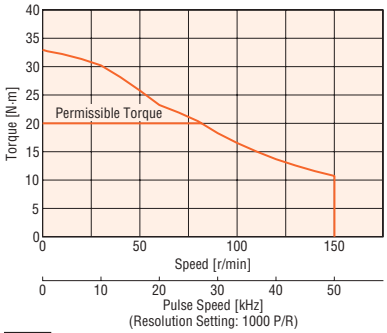


**AZM98** Gear Ratio **30**

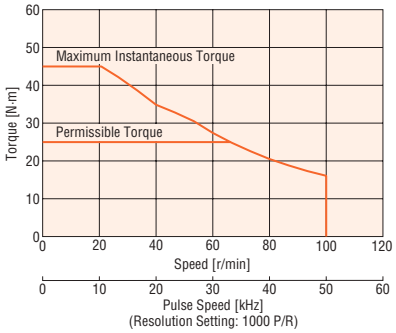


Note

- The speed–torque characteristics shows the data based on the company's measurement conditions. If conditions change, the characteristics may change.
- Depending on the driving conditions, a considerable amount of heat may be generated by the motor. To protect the ABZO sensor, ensure that the motor case temperature is 80°C or less. (When conforming to the UL Standards, it is required to keep the temperature of the motor case at 75°C or less, since the motor is recognized as insulation class A.)