Undervoltage Trip (UVT)

(1) Specifications for UVT and coil ratings

Table 11

Model	Specification		Coil ratings			
	Reset type	Non-reset type	Voltage (V) Standard voltage	Voltage (V) Special voltage (*1)	Input (VA)	Operating time (*2) (ms)
NF50-SVFU NV50-SVFU	–	○	AC/DC100-130V AC200-250V AC380-480V	AC/DC24V AC/DC48V	5	30 or less
NF32-SV, NF63-CV/SV/HV/HRV NF125-CV/SV/HV/RGV/SEV/HEV/UV NF125-SGV/LGV/HGV, NF160-SGV/LGV/HGV NF250-CV/SV/HV/RGV/SEV/HEV/UV NF250-SGV/LGV/HGV NV32-SV, NV63-CV/SV/HV NV125-CV/SV/HV/SEV/HEV NV250-CV/SV/HV/SEV/HEV NF100-CVFU, NF125-SVU/HVU, NF250-SVU/HVU NV100-CVFU, NV125-SVU/HVU, NV250-SVU/HVU	○	○		AC/DC24V AC/DC48V AC500-600V		
NF400-CW/SW/SEW/HEW/REW/UEW NF630-CW/SW/SEW/HEW/REW NF800-CEW/SDW/SEW/HEW/REW/UEW NV400-CW/SW/SEW/HEW/REW NV630-CW/SW/SEW/HEW NV800-SEW/HEW	○ (*4)	○ (*5)	Switching between 100 to 110 and 120 to 130 AC Switching between 200 to 220 and 230 to 250 AC Switching between 380 to 415 and 440 to 480 AC Switching between 100 and 110 DC (*3)	Switching between 24/48 AC Switching between 500 to 550/600 AC Switching between 24/48DC Switching between 110/125DC (*3)	5	5-30
NF1000-SEW, NF1250-SEW NF1600-SEW	○	○				5-35
NF400-SWU/HWU, NF630-SWU/HWU	○ (*4)	–				5-30
NF225-CWU	–	○		Switching between 24/48 AC Switching between 24/48DC Switching between 110/125DC (*3)		30 or less

Notes *1 Some special voltage models vary in voltage range.
*2 The operating time is the time from when the undervoltage tripping device is set to the no-voltage state until the main contact starts opening.
*3 The accessory is usable at 50 Hz and 60 Hz.
*4 If UVT is turned on without excitation, the circuit breaker instantaneously opens and immediately trips.
*5 Only for installation on the left pole

(2) Reset type and non-reset type UVT

■ Reset type (Refer to Table 12.)

The reset type UVT has a structure which does not trip a circuit breaker even if the UVT coil is not excited when the circuit breaker handle is in the OFF or reset position. Therefore, it keeps the circuit breaker in the reset state even if the coil is not excited when the breaker is reset electrically.
When the coil in the unexcited state is turned on, the circuit breaker is normally tripped. However, the major contacts of some models of circuit breakers may instantaneously close, or, on circuit breakers with AX, the AX switches may instantaneously change over. For electrical interlock, use a non-reset type UVT.

■ Non-reset type (Refer to Table 12.)

When the UVT coil is not excited, the circuit breaker cannot be set to the off state even if the circuit breaker is tried to be reset from the tripped state. When the coil exciting voltage restores to the reference voltage or more, the circuit breaker can be reset to the off state.

(3) Time delay UVT

- This type of UVT has a time delay in operation.
- It can prevent operation upon occurrence of instantaneous power failure.

Table 12

UVT module type name	Time delay	Voltage (V) Standard voltage	Voltage (V) Special voltage
U-05W	Switching among 0.1, 0.3 and 0.5 s	AC24/48 AC100−120/200−240/380−450 AC220−250/380−450/460−550 (Compatible with 50 Hz and 60 Hz) DC100−110	AC380−450/460−550/600−690 (Compatible with 50 Hz and 60 Hz) DC24/48
U-30W	Switching among 0.5, 1 and 3 s	AC100−120/200−240/380−450 AC220−250/380−450/460−550 (Compatible with 50 Hz and 60 Hz)	–

(4) Structure of UVT

The UVT mechanical unit is installed in a circuit breaker, and the UVT voltage module is installed on the outside of the circuit breaker. When the voltage drops, the UVT voltage module detects the voltage drop, and the UVT mechanical unit trips the circuit breaker.
The UVT voltage module has a vertical lead wire terminal block and is normally installed on the body. The external module will be manufactured to order.

●Outline drawing

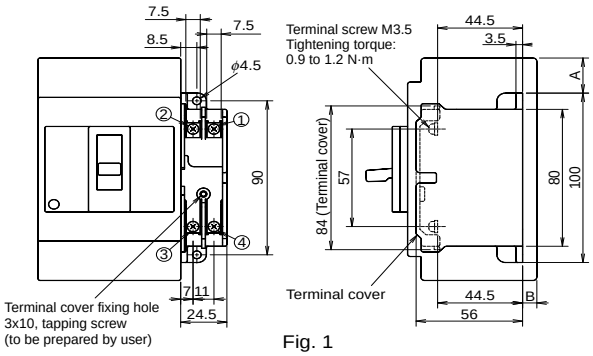

Fig. 1

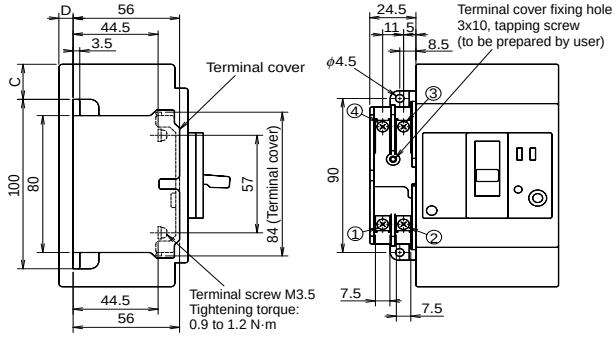

Fig. 2

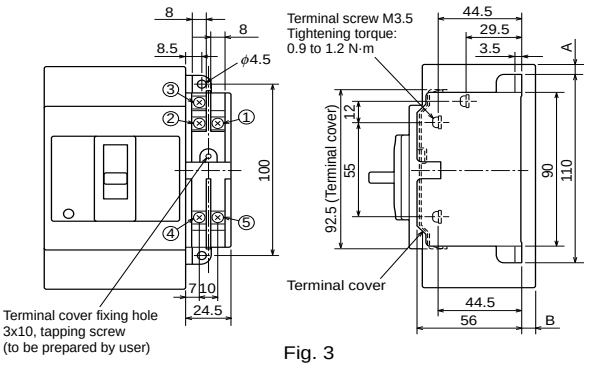

Fig. 3

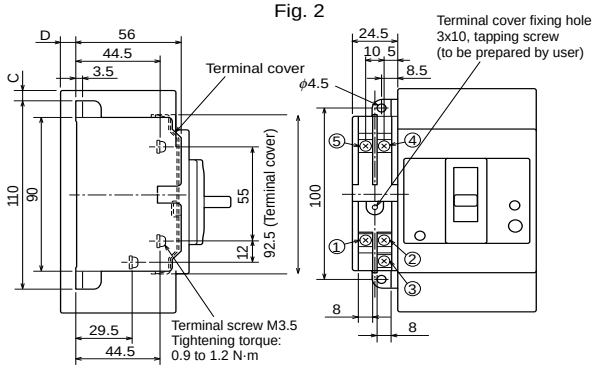

Fig. 4

●Examples of connection

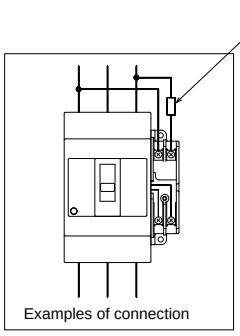

Terminal symbols

①	D1/P1	Control power supply terminal (COM)
②	D2/P2	Control power supply terminal (rated voltage)
③	J1/UC1	UVT coil connecting terminal
④	J2/UC2	UVT coil connecting terminal

Remarks: 1. When the UVT voltage module is installed on the body (standard), the UVT is supplied with J1/UC1 and J2/UC2 terminals connected with the UVT coil.
2. When the UVT is installed on the left pole side, the UVT module terminal positions are reversed (on the power supply and load sides). Carefully connect the terminals.

Fig. 5

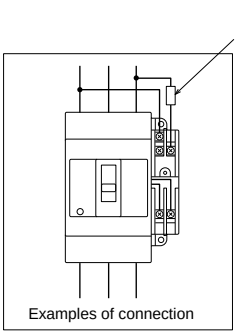

Terminal symbols

①	D1/P1	Control power supply terminal (COM)
②	D2/P2	Control power supply terminal (rated voltage Lo)
③	D3/P3	Control power supply terminal (rated voltage Hi)
④	J1/UC1	UVT coil connecting terminal
⑤	J2/UC2	UVT coil connecting terminal

Remarks: 1. When the UVT is used at the rated voltage Lo, connect the control voltage to D1/P1 and D2/P2 terminals.
When the UVT is used at the rated voltage Hi, connect the control voltage to D1/P1 and D3/P3 terminals.
(Ex.) 100 to 110/120 to 130 V AC
(Rated voltage Lo/rated voltage Hi)
2. When the UVT voltage module is installed on the body (standard), the UVT is supplied with J1/UC1 and J2/UC2 terminals connected with the UVT coil.
3. When the UVT is installed on the left pole side, the UVT module terminal positions are reversed (on the power supply and load sides). Carefully connect the terminals.

Fig. 6

Table 13 Installation on right pole side

Model	Reference drawing	Variable dimensions A	Variable dimensions B
NF50-SVFU	Fig. 1 Fig. 5	11	7.5
NF32-SV, NF63-CV/SV/HV		20.5	7.5
NF100-CVFU		20.5	7.5
NF125-CV/SV/HV		20.5	7.5
NF125-SVU/HVU		41.5	7.5
NF125-UV		81.5	7.5
NF125-SEV/HEV/RGV, NF250-CV/SV/HV/RGV/SEV/HEV NF125-SGV/LGV/HGV, NF160-SGV/LGV/HGV NF250-SGV/LGV/HGV		38	7.5
NF250-SVU/HVU		48	7.5
NF250-UV		113	7.5
NF225-CWU	Fig. 3 Fig. 6	25.5	7.5
NF400-CW/SW/SEW/HEW/REW NF630-CW/SW/SEW/HEW/REW, NF400-SWU/HWU		67.5	41.5
NF400-UEW(3P)		107.5	138.5
NF800-CEW/SDW/SEW/HEW/REW, NF630-SWU/HWU		76.5	41.5
NF400-UEW(4P), NF800-UEW		123.5	138.5
NF1000-SEW, NF1250-SEW, NF-1600-SEW		161	63

Table 14 Installation on left pole side

Model	Reference drawing	Variable dimensions C	Variable dimensions D
NV125-CV/SV/HV	Fig. 2	20.5	7.5
NV125-SEV/HEV, NV250-CV/SV/HV/SEV/HEV	Fig. 5	38	7.5
NF400-CW/SW/SEW/HEW/REW NF630-CW/SW/SEW/HEW/REW NV400-CW/SW/SEW/HEW/REW NV630-CW/SW/SEW/HEW NF400-ZCW/ZSW/ZEW NF400-SWU/HWU	Fig. 4 Fig. 6	67.5	41.5
NF400-UEW(3P)		107.5	138.5
NF800-CEW/SDW/SEW/HEW/REW NV800-SEW/HEW, NF630-SWU/HWU		76.5	41.5
NF400-UEW(4P), NF800-UEW		123.5	138.5

Lead Wire Drawing

Lead wire lateral drawing … Available to all models

Note *1 Except for BH, BH-P, BH-S, BH-PS, BH-D6, BH-D10, BH-DN, BV-D, BV-DN and KB-D.

Remark: 1. Although the following models are applicable to lead wires drawn laterally, they are normally applicable to installation in close contact with the circuit breaker side faces. (The circuit breaker side faces have grooves.)

NF32-SV, NF63-CV/SV/HV~NF250-CV/SV/HV/UV
NF125-SEV/HEV, NF250-SEV/HEV, NF125-RGV
NF250-RGV, NF125-SGV/LGV/HGV~NF250-SGV/LGV/HGV
NV32-SV, NV63-CV/SV/HV~NV250-CV/SV/HV
NV125-SEV/HEV, NV250-SEV/HEV
NF50-SVFU, NF100-CVFU, NF125-SVU/HVU, NF250-SVU/HVU, NF225-CWU
NV100-CVFU, NV125-SVU/HVU
NV250-SVU/HVU

(When a 4-pole model among the above models has accessories installed on the right pole side, the lead wires are 400 mm long.)

Lead wires drawing to load

Table 15

Model applicable to lead wire drawing to load	(only front connection type)
NF30-CS	

Specifications for lead wires

Table 16

Applicable model	Kind of lead wire	Lead wire thickness	Lead wire length	Example of ring mark
NF30-CS	Heat-resistant wire	0.4mm²	450mm	98/ALa (Red), 96/ALb (Blue) 95/ALc (Gray), 14/AXa (Brown) 12/AXb (Black), 11/AXc (White) C1/S1 (Red), C2/S2 (Red) J1/UC1 (White), J2/UC2 (White) A terminal symbol is indicated on each lead wire with a ring mark.
1000A frame or above		0.75mm²		
30 to 800A frames except above models		0.5mm²		

Lead Wire Terminal Block

(1) Vertical lead wire terminal block (SLT)

The lead wire terminal blocks for plug-in terminal blocks are available (P-LT).
The drilling size of these terminal blocks differs from the standard size. Consult us for details.
For a flush plate type circuit breaker, a terminal block will be installed on the circuit breaker rear face. (Specify as FP-LT.)

Note *1 When the circuit breaker body is equipped with internal accessories and electrical operation device of motor-driven type (2) or spring charge type (2), the circuit breaker is normally provided with a lead wire terminal block.

MCCB

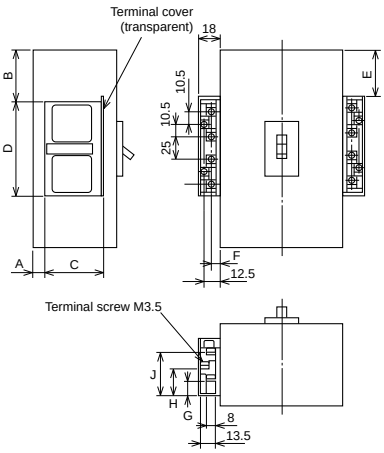

Table 17-1 Table of variable dimensions

Model	A	B	C	D	E	F	G	H	J
NF30-CS (*1)	4	4.5	44.5	86.5	4.5	7	10	22	34
NF32-SV, NF63-CV/SV/HV	7	26.5	54	86.5	26.5	7	14	26	38
NF125-CV/SV/HV	7	26.5	54	86.5	26.5	7	14	26	38
NF125-UV	7	87.5	54	86.5	87.5	7	14	26	38
NF250-UV	7	119	54	86.5	119	7	14	26	38
NF125-SEV/HEV/RGV, NF250-CV/SV/HV/SEV/HEV/RGV NF125-SGV/LGV/HGV, NF160-SGV/LGV/HGV NF250-SGV/LGV/HGV	7	44	54	86.5	44	7	14	26	38
NF50-SVFU	7	27.5	54	86.5	27.5	7	14	26	38
NF100-CVFU	7	28.5	54	86.5	28.5	7	14	26	38
NF125-SVU/HVU	7	47.5	54	86.5	47.5	7	14	26	38
NF225-CWU	7	37	54	86.5	37	7	14	26	38
NF400-CW/SW/SEW/HEW/REW, NF400-SWU/HWU NF630-CW/SW/SEW/HEW/REW	41	79.5	54	86.5	79.5	7	14	26	38
NF800-CEW/SDW/SEW/HEW/REW, NF630-SWU/HWU		88.5	54	86.5	88.5	7	14	26	38
NF1000-SEW, NF1250-SEW, NF1600-SEW	62.5	173	54	86.5	173	7	14	26	38
NF400-UEW(3P) (*1)	138	119.5	54	86.5	119.5	7	14	26	38
NF400-UEW(4P), NF800-UEW (*1)		135.5	54	86.5	135.5	7	14	26	38

Note *1 The terminal positions are different from those shown in the left figure. Consult us for details.
Remark: 1. Terminal screw tightening torque: M3.5 … 0.9 to 1.2 N·m

ELCB

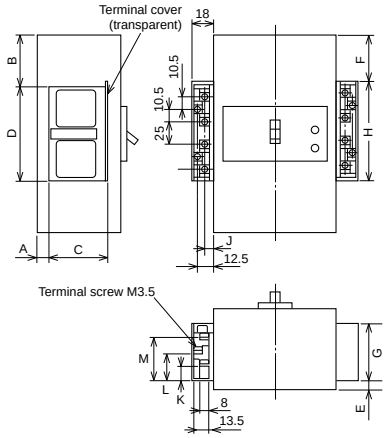

Table 17-2 Table of variable dimensions

Model	A	B	C	D	E	F	G	H	J	K	L	M
NV50-SVFU	16.5	17	54	86.5	16.5	17	54	86.5	6	10.5	22.5	34.5
NV32-SV, NV63-CV/SV/HV	7	26.5	54	86.5	7	26.5	54	86.5	7	14	26	38
NV100-CVFU	7	36.5	54	86.5	7	36.5	54	86.5	7	14	26	38
NV125-CV/SV/HV	7	26.5	54	86.5	7	26.5	54	86.5	7	14	26	38
NV125-SVU/HVU	7	47.5	54	86.5	7	47.5	54	86.5	7	14	26	38
NV125-SEV/HEV, NV250-CV/SV/HV/SEV/HEV	7	44	54	86.5	7	44	54	86.5	7	14	26	38
NV250-SVU/HVU	7	54	54	86.5	7	54	54	86.5	7	14	26	38
NV400-CW/SW/SEW/HEW/REW NV630-CW/SW/SEW/HEW	41	79.5	54	86.5	26.5	79.5	52	92	7	14	26	38
NV800-SEW/HEW (*1)	41	88.5	54	86.5	26.5	88.5	52	92	7	14	26	38

Note *1 The terminal positions are different from those shown in the left figure. Consult us for details.
Remarks: 1. Terminal screw tightening torque: M3.5 … 0.9 to 1.2 N·m
2. The lead wire terminal block for TBL is provided on the right pole side. However, the lead wire terminal blocks for TBL of NV30-FA and NV50-FA are provided on the left pole side.

14-terminal SLT

SLT for installing three or more internal accessories on the left pole side

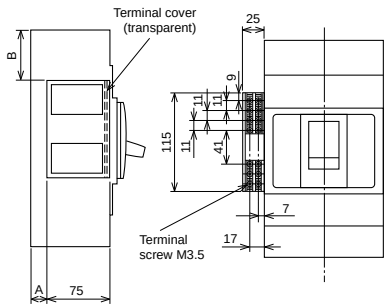

Table 17-3

Model		A	B
MCCB	ELCB		
NF400-CW/SW/SEW NF400-HEW/REW NF630-CW/SW/SEW NF630-HEW/REW	NV400-CW/SW/SEW NV400-HEW/REW NV630-CW/SW/SEW/HEW	20	60
NF400-UEW(3P)	–	117	100
NF800-CEW/SDW/SEW NF800-HEW/REW	NV800-SEW/HEW	20	69
NF400-UEW(4P), NF800-UEW	–	117	116
NF1000-SEW, NF1250-SEW NF1600-SEW	–	35	154

Remark: 1. The terminal positions are different from those shown in the left figure. Consult us for details.

Test Button Module (TBM)

- The test button is kept pressed while control input voltage is applied to the button. (When ELCB of time delay type is used, apply voltage for 2 seconds or more.)
- The test button module is supplied with voltage through a circuit isolated from the main circuit. It can share the control sequence with SHT of a molded case circuit breaker.
- Unlike TBL, the test button modules can be connected in parallel.
- The module is normally provided with a vertical lead wire terminal block (SLT).

Table 18

Model	NV32-SV NV63-CV/SV/HV NV125-CV/SV/HV NV125-SEV/HEV NV250-CV/SV/HV/SEV/HEV NV50-SVFU NV100-CVFU NV125-SVU/HVU NV250-SVU/HVU	NV400-CW/SW NV630-CW/SW NV400-SEW~NV800-SEW NV400-HEW~NV800-HEW NV400-REW
Control input Rated voltage (V)	Compatible with 100 to 240 AC and 100 to 240 DC (DC24) (*1)	
Control input (VA)	1.5 VA or less	1 VA or less
Reference drawing	Fig. 1	Fig. 2

Note *1 Unless otherwise specified, the module will be manufactured for 100 to 240 V AC and 100 to 240 V DC.
In the case of 24 V DC, specify the voltage.
Remark: 1. The length of the lead wires to be connected to TBM1 and 2 shall be 100 m or more.

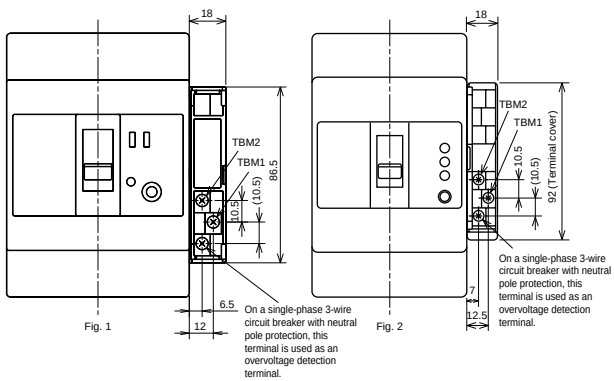

For a flush plate type with 250A frame or below, the external dimensions of the flush plate type differ from the standard dimensions.

Pre-Alarm Module (PAL)

The pre-alarm is a function to output an alarm when the load current exceeds the preset current value. It is helpful in securing continuous power supply and preventive maintenance.
It can be fitted to electronic circuit breakers with a frame size from 125 to 1600 A.

■ 125 and 250A frames

● Pre-alarm module (PAL module)

The standard modules have SLT. Other internal accessories cannot be installed on the right pole side.
A control power supply (compatible with 100 to 240 V AC and DC) is necessary. The control power supply voltage range is 85 to 246 V AC/DC, and the required volt-ampere is 5 VA.

Table 19-1

Model	Switching capacity Contact output (1a)		Resetting method
NF125-SEV NF125-HEV NF250-SEV NF250-HEV NV125-SEV NV125-HEV NV250-SEV NV250-HEV	AC125V 2A AC250V 2A	DC 30V 2A DC100V 0.3A	Press the reset button, or turn off the control power supply.

Pre-alarm characteristics

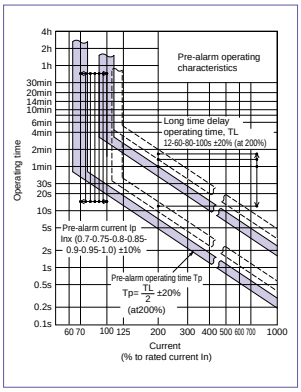

Dimensional drawing of pre-alarm module

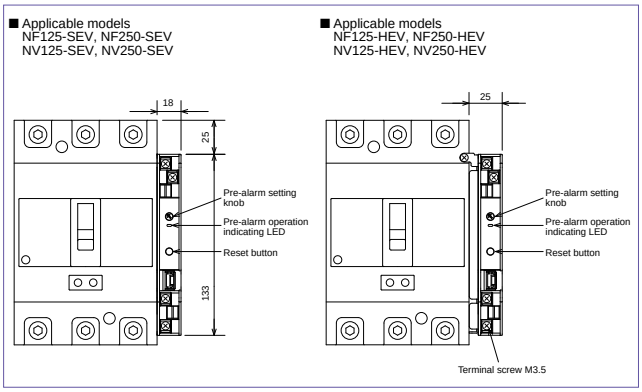

Terminal arrangement

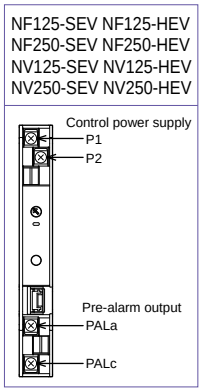

● Pre-alarm LED indication

When the load current exceeds the preset current value, the LED lamp on the pre-alarm module front panel starts blinking. When the pre-alarm output is given, the lamp stops blinking and turns on.

● Pre-alarm current setting (IP setting)

The pre-alarm current can be set to the rated current In × 0.7, 0.75, 0.8, 0.85, 0.9, 0.95 or 1.0 with the knob on the pre-alarm module front panel.

■ 400 A frame or above

● Solid state relay (SSR) output (PAL lead)

The lead wires are drawn out. On the right pole side, only internal accessories with lead wires drawn out can be installed. A control power supply is unnecessary.

Table 19-2

Model	Switching capacity Solid state relay (SSR) – Non-contact output	Resetting method
NF400-SEW NF400-HEW NF400-REW NF400-UEW NF630-SEW NF630-HEW NF630-REW NF800-CEW NF800-SEW NF800-HEW NF800-REW NF800-UEW NF1000-SEW NF1250-SEW NF1600-SEW NV400-SEW NV400-HEW NV400-REW NV630-SEW NV630-HEW NV800-SEW NV800-HEW	AC/DC24 to 240V 20mA	When the load current becomes lower than the preset current value, the alarm is reset.

● Pre-alarm module (PAL module)

The standard modules have SLT. Other internal accessories cannot be installed on the right pole side.
A control power supply (compatible with 100 to 200 V AC) is necessary except for NF-ZEW. The control power supply voltage range is 80 to 242 V AC, and the required volt-ampere is 10 VA.

Table 19-3

Model	Switching capacity Contact output (1a)	Resetting method
NF400-SEW NF400-HEW NF400-REW NF400-UEW NF630-SEW NF630-HEW NF630-REW NF800-CEW NF800-SEW NF800-HEW NF800-REW NF800-UEW NF1000-SEW NF1250-SEW NF1600-SEW NV400-SEW NV400-HEW NV400-REW NV630-SEW NV630-HEW NV800-SEW NV800-HEW	100 V AC or 200 V AC, 2 A	Press the reset button, or turn off the control power supply.

Pre-alarm characteristics

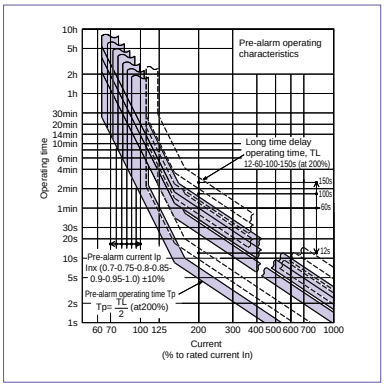

Detailed drawing of pre-alarm module

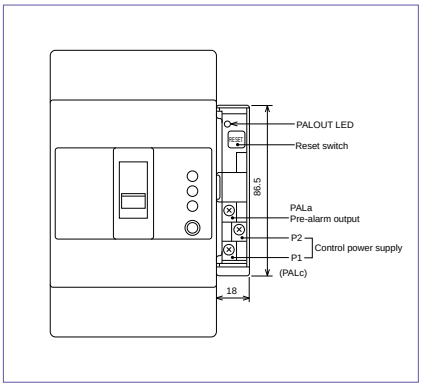

Pre-alarm module output rating

AC		
Voltage	Current (A)	
V	Resistive load	Inductive load
200	3	2
100	3	2

A control power supply (compatible with 100 to 200 V AC) is necessary. For the wiring method, see the following figure. (The control power supply voltage range is 80 to 242 V AC.) The required volt-ampere is 10 VA.

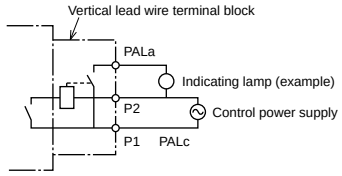

● Pre-alarm LED display (standard device)

When the load current exceeds the preset current value, the LED lamp on the circuit breaker front panel starts blinking. When the pre-alarm output is given, the lamp stops blinking and turns on.

● Pre-alarm current setting (IP setting)

The pre-alarm current can be set to the rated current In × 0.7, 0.75, 0.8, 0.85, 0.9, 0.95 or 1.0 with the knob on the circuit breaker front panel.

F-Type Operating Handle

Operating handle of breaker mount type to be installed to circuit breaker body

Appearance (Color: Munsell N1.5)

- The handle provides an isolating function in combination with the circuit breaker body (except F10SW and above).
- It has a safety device which prevents the circuit breaker turning on while the door is open.
- It can be locked in the OFF position. (Up to 3 commercially available padlocks (35 mm and 40 mm) can be fitted. A type which can be locked in the ON or OFF position can be manufactured. Specify the type if required.) On circuit breakers with a frame size of 1000A or above, the handle can be locked in the ON or OFF position. (If it is necessary to lock the handle only in the OFF position, specify so.)
- It is in protection class IP54 (IEC 60529). (For circuit breakers with a frame size of 1000A or above, the protection class (IEC 60529) is IP3X (IP5X when dust-proof packing is provided).

Dust-proof packing (optional)

Type name	Operating handle type name	Delivery category
PFL	F10SW~F120UR	●

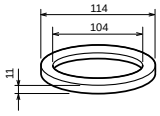

Outline drawings

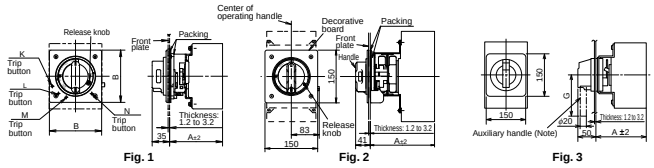

Fig. 1 Fig. 2 Fig. 3

Note Auxiliary handles are provided with F10SW, F10SW4P and F120UR as standard.
Auxiliary handles (F-HT) are provided for F-4S ~ F-6SUL as option.

Center of hinge and breaker

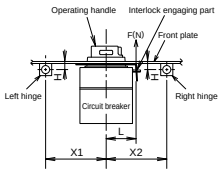

- The left drawing shows the relationship between the hinges and circuit breaker viewed from the load side of the circuit breaker.

Center of hinge and circuit breaker

	Hinge on left side		Hinge on right side	
	H	X_1	H	X_2
For 30 to 250 A frames	0 or more	(5H+85) or more	Less than 10	170 or more
			10 or more	(5H+120) or more
For 400 to 800 A frames	0 or more	(5H+85) or more	0 or more	(4H+120) or more
For 1000 to 1600 A frames	0 or more	(8H+150) or more	0 or more	(4H+120) or more

Remarks: 1. The handle is opened and closed in the projection area of the handle and does not run over the projection area of the circuit breaker (except when the auxiliary handle is provided.)
2. When the operating handle is fitted to NV, the test button cannot be pressed easily. If necessary, use a circuit breaker with TBL or TBM. When using an Earth Leakage Alarm Breaker, use the externally resetting type (ECA-SLT RST) or automatically resetting type (ARS).

Dimensional drawings of front plate drilling

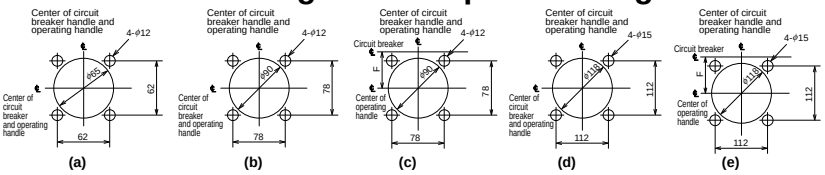

(a) (b) (c) (d) (e)

Dimensional drawings of circuit breaker mounting holes

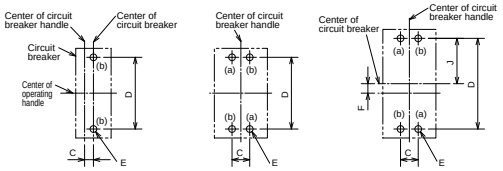

(f) (g) (h)

Door lock withstand load

	F(N)	L(mm)
F-05~F-2	500	50
F-4~F-8		68

Table 20 Summary of dimensions

Type name	Door opening position: OFF position	Door opening position: Reset position	Applicable model: MCCB	MCCB: Number of poles	Applicable model: ELCB	ELCB: Number of poles	Reference drawing: Dimensional drawing	Reference drawing: Drilling plan		Dimensions (mm): A (*1)	B	C	D	E	F	G	J	Trip button position (*4)	Mounting screw
F-05SV2 F-05SVE2	–	○	NF32-SV NF63-CV, NF63-SV, NF63-HV	2P	–	–	Fig. 1	b	f	105	104	13	111	M4 screw or ϕ5	–	–	–	N	(a) Circuit breaker mounting screw (2 pcs.) (b) Circuit breaker handle mounting screw (2 pcs.) F-05SV2 F-05SVE2 F-1SV2 F-1SVE2 F-05SRUL2 F-03SVUL2 F-05SVUL2 Only the screws (b) are used for the following models.
F-05SV F-05SVE (*2)	–	○	NF32-SV NF63-CV, NF63-SV, NF63-HV	3P • 4P	NV32-SV NV63-CV, NV63-SV, NV63-HV	2P • 3P			g			25						L	
F-1SV2, F-1SVE2	–	○	NF125-CV, NF125-SV	2P	–	–			f	105		15			–		–	N	
F-1SV F-1SVE	–	○	NF125-CV, NF125-SV	3P • 4P	NV125-CV, NV125-SV, NV125-HV	3P • 4P			g			30						L	
			NF125-HV	2P • 3P • 4P															
F-1UV, F-1UVE	–	○	NF125-UV	2P • 3P • 4P	–	–		c	h				172		31		86	L	
F-2SV F-2SVE	–	○	NF125-SEV, NF125-HEV, NF125-RV NF125-SGV, NF125-LGV, NF125-HGV NF160-SGV, NF160-LGV, NF160-HGV NF250-SGV, NF250-LGV, NF250-HGV NF250-CV, NF250-SV, NF250-HV NF250-SEV, NF250-HEV, NF250-RV	2P • 3P • 4P	NV125-SEV, NV125-HEV NV250-CV, NV250-SV, NV250-HV NV250-SEV, NV250-HEV	3P • 4P		b	f	107		35	126		–		–	K	
F-2UV, V-2UVE	–	○	NF250-UV	2P • 3P • 4P	–	–		c	h				201		38		100.5	K	
F-1SVUL	–	○	NF125-SVU, NF125-HVU	3P	NV125-SVU, NV125-HVU	3P		c	h	105		30	123		6		61.5	L	
F-2SVUL	–	○	NF250-SVU, NF250-HVU	3P	NV250-SVU, NV250-HVU	3P		b	g	107		35	126		–		–	K	
F-03SVUL2	–	○	NF50-SVFU	2P	NV50-SVFU	2P		a	f	105	80	9	82.5					M	
F-03SVUL	–	○		3P		3P			g			18							
F-05SVUL2	–	○	NF100-CVFU	2P	–	–		b	f		104	13	111					N	
F-05SVUL	–	○		3P	NV100-CVFU	3P			g			25						L	
F-2SUL	–	○	NF225-CWU	3P	–	–		b	g	107	104	35	126					–	
F-4S F-4SE	–	○	NF400-CW, SW, SEW, HEW, REW NF630-CW, SW, SEW, HEW, REW	2P, 3P, 4P	NV400-CW, SW, SEW, HEW, REW NV630-CW, SW, SEW, HEW	3P, 4P	Fig. 2	d	g	183	–	44	194	M6 screw or ϕ7	–	–	–	–	(a)(b) Circuit breaker mounting screw (4 pcs.)
F-4U F-4UE	–	○	NF400-UEW	3P	–	–		e	h	280			234		20				
F-8S F-8SE	–	○	NF800-CEW, SDW, SEW NF800-HEW, REW	2P, 3P, 4P	NV800-SEW, HEW	3P		d	g	183		70	243		–				
F-8U F-8UE	–	○	NF800-UEW NF400-UEW(4P)	3P, 4P	–	–		e	h	280			290		23.5				
F-4SUL	–	○	NF400-SWU/HWU	3P	–	3P		d	g	183		44	194		–				
F-6SUL	–	○	NF630-SWU/HWU	3P	–	–						70	243						
F10SW (*3)	–	○	NF1000-SEW NF1250-SEW/SDW NF1600-SEW/SDW	2P, 3P	–	–	Fig. 3	d	g	221	–	70	375	M8 screw or ϕ10	–	200			
F10SW4P (*3)				4P															

Notes *1 The dimensions for the front connection type are shown. On some models of the rear connection type and plug-in type, the reference surface for mounting the circuit breaker may change.
*2 For the 4-pole plug-in type, a special handle is required. Consult us for details.
*3 If a handle which can be locked only in the OFF position is required, specify so.
*4 The circuit breaker can be tripped by operating the trip button while the door is open.
*5 Do not remove the sponge packing used to secure the protection class IP51. Fit the supplied packing without fail.
*6 The handle cannot be used when the circuit breaker is installed on IEC 35-mm rails.

Remarks: 1. The handles with E in their model names are designed for emergency stop devices. Their delivery category is ●.
2. The standard handles are Reset Open Type which can open the doors only when they are reset to open. OFF Open type handles which can open the doors when they are in the OFF position can be manufactured to order.
3. A handle which can be operated and can indicate the ON and OFF positions in the same manner as the standard models even if the circuit breaker is installed horizontally can be manufactured to order.
4. F10SW and higher models do not conform to the isolation function.
5. Handles which are opened and closed in the OFF position can be opened also in the reset position.

●Installation procedure For details, please refer to Operating Handle Installation Manual supplied with the product.

① Installation to a breaker Install the operating handle to the circuit breaker in accordance with the following procedure.

Installation procedure

250A frame and below

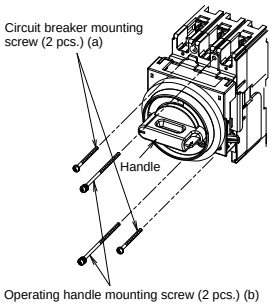

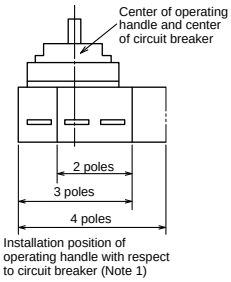

(Installation procedure)
① Install the circuit breaker on the panel with the two circuit breaker mounting screws through the holes (a).
② Install the operating handle with the supplied two operating handle mounting screws through the holes (b).

(In the case of F-05SV2, F-1SV2, F-05SRUL2, F-05SUL2 and F-1SUL2)
Tighten the circuit breaker and operating handle together with the supplied two operating handle mounting screws.

400 to 1600A frames

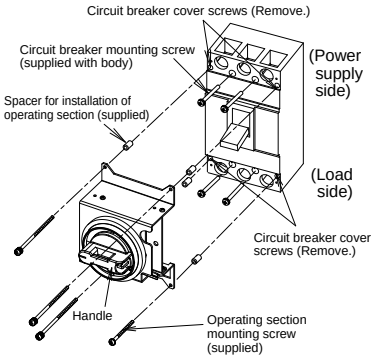

(In the case of F-4S to F-6SUL)
The operating handle mounting screws are tapping screws without washers or spring washers.

(Installation procedure)
① Remove the circuit breaker cover screws in the same positions as the operating handle mounting holes.
② Install the circuit breaker with the four circuit breaker mounting screws.
③ Fit the spacer(s) for installation of operating handle between the circuit breaker and operating handle. (The number of the spacers varies depending on the model.)
④ Install the operating handle with the supplied operating handle mounting screws.

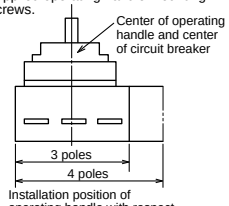

Note *1 In the case of F-05SRUL2, the center of the operating handle is the same as the center of the circuit breaker.

② Installation of decorative board and retaining board

Drill holes in the door according to the drilling size shown on the previous page, and tighten the decorative board and retaining board with the supplied countersunk screws. In the case of 800A frame or below, fit the supplied packing to the position shown right.

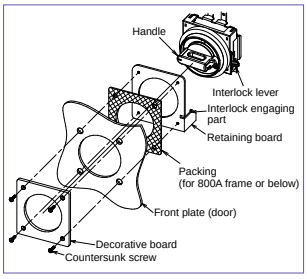

●Door locking mechanism

The panel door can be opened only when the operating handle is operated to open (reset). (On F-4S to F10SW, the door lock is held in the released state even if the handle is returned to OFF.) The door can be opened when the handle is in the ON position if the release knob is operated with a tool.

●Operation locking mechanism

Circuit breakers with a frame size of 800A or below can be locked by setting the handle in the OFF position. (Operating handles which can lock circuit breakers in the ON or OFF position can be manufactured.) Operate the locking part, and lock the handle with padlocks. Up to three padlocks can be fitted.
Lockout hasps (scissors locks) can be used.
If the circuit breaker trips even when the operating handle is locked in the ON position, also the operating handle indicates that it has tripped.
[F-2SUL or below: Only when one 35-mm padlock (weighing 70 g or less) is used
F-4S or above: Only when one 40-mm padlock (weighing 100 g or less) is used]
To 800A frame or below, padlocks with dimension C of 3 mm to 8 mm can be applied.
For 1000A or above, padlocks with dimension of 3 mm to 6 mm can be applied. (When using padlocks of 3 mm or less, please consult us.)

●Circuit breaker installation direction (except UL 489 listed circuit breakers)

We can supply circuit breakers on which the handles and their ON and OFF positions are in the same directions as on vertically installed circuit breakers even when they are installed horizontally. The door drilling size is identical. If you intend to install an operating handle on a horizontally installed circuit breaker, specify "Y" (horizontal installation with power supply on the left) or "Z" (horizontal installation with power supply on the right) at the end of the model name. (Ex.: F-4S Y)

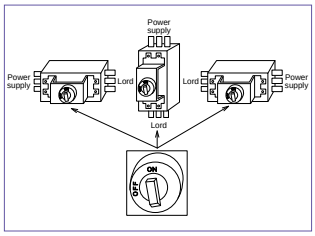

●Sealing of release knob

The use of an optional part, Release Protection "F-RCS", can prevent the panel door being opened by operating the release knob. (800A frame or below)

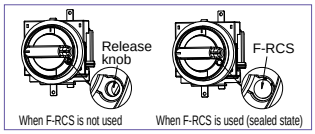

●Operation Lock Devices

(1) Padlock

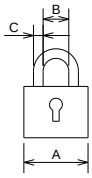

Padlock Dimensions
Use commercially available padlocks. (mm)

Applicable model	A (Nominal size)	B	C
All models	35	19	5
	40	22 or 23	5.5

Dimension C: Maximum 8mm.

(2) Lockout Devices (Scissors Lock)

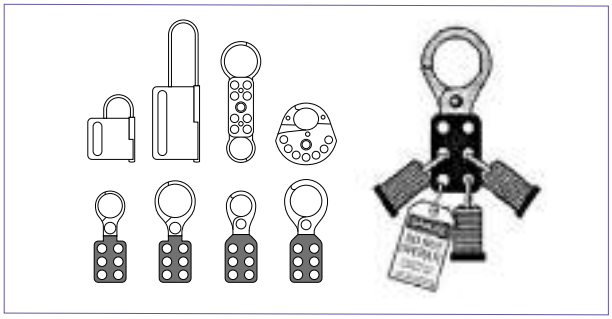

●How to order

For 800A frame or below, specify the following specification symbols together with the model name.
- · Operation lock: LF ····· Lock in OFF position
- · Operation lock: LN ····· Lock in ON or OFF position
- · Door opening: DR ····· Reset to open
- · Operation lock: DF ····· Open in OFF position
- · Installation direction: Blank ··· Power supply upward
- · Installation direction: Y ····· Power supply on left
- · Operation lock: Z ····· Power supply on right

For a standard product with a frame size of 1000A or above, specify the model name. When it is required to enable the operation lock only in the OFF position, specify the model name and "only lock in OFF position."
If you intend to seal the release knob, place an order for the release protection. (Lot: 10 pcs.)

●Interpretation of model name

(1) For 800A frame or below

F	–	1	SV	UL	E	2
1)		2)	3)	4)	5)	6)

1) F: Operating handle type name
2) 1: Circuit breaker group (0.5, 1, 2, 4, 6 or 8)
3) SV: Classification of circuit breaker (S, SV, H, U, UV, SR or SG)
4) UL: Blank···General product UL···UL 489 listed product
5) E: Blank···Standard E···For emergency stop
6) 2: Blank···3P or 4P 2···2P

(2) For 1000A frame or above

F	10	SW	4P
1)	2)	3)	4)

1) F: Operating handle type name
2) 4: Circuit breaker A frame (10 or 120)
3) SW: Series name
4) 4P: Number of poles (4P) * Not indicated for 3P

V-Type Operating Handle

Operating handle of door mount type consisting of operating section to be mounted on circuit breaker body and operating handle on panel door

Appearance (Color: Munsell N1.5)

- The handle provides an isolation function in combination with the circuit breaker body.
- Conforming to the safety regulations of EN Standard (EN 60204-1)
- Protection class (IEC 60529) IP65 as standard
- The handle can be locked only in the OFF position with up to three commercially available padlocks (35 mm or 40 mm).
- The panel door can be opened in the OFF position. In the ON and trip positions, the panel door is locked and cannot be opened. However, the door can be opened even in the ON and trip positions by operating the release part with a tool.

Outline drawings

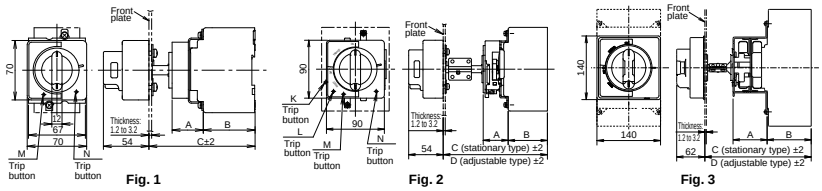

Fig. 1 Fig. 2 Fig. 3

Note Auxiliary handles (F-HT) are provided for V-4S ~ V-6SUL as option.

Center of hinge and breaker

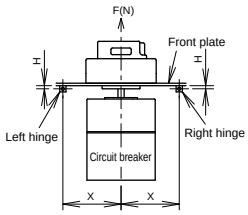

Relationship between hinges and circuit breaker viewed from load side of circuit breaker

	H	X
For 30 to 250 A frames	0 or more	5H+100 or more
For 400 to 800 A frames		8H+150 or more

* The above figure shows the relationship viewed from the load side.

Dimensional drawings for front plate drilling

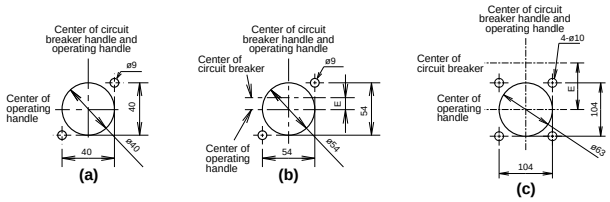

(a) (b) (c)

Dimensional drawings of circuit breaker mounting holes

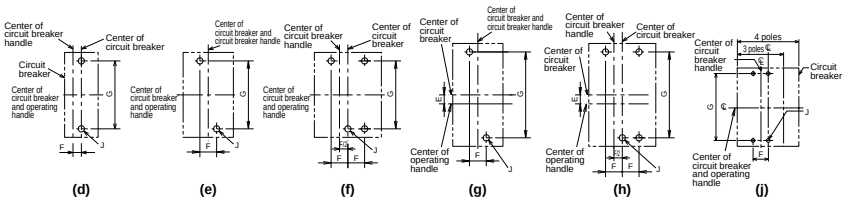

(d) (e) (f) (g) (h) (j)

Door lock withstand load

	F(N)
30 to 800A frames	200

Table 21 Summary of dimension

Type name: Stationary type	Type name: Adjustable type	Applicable model: MCCB	MCCB: Number of poles	Applicable model: ELCB	ELCB: Number of poles	Reference drawing: Dimensional drawing	Reference drawing: Drilling plan		Dimensions (mm): A	B	Stationary type C	Adjustable type(*2) D (min)	D (max)	E	F	G	J	Trip button position (*5)
V-05SV2 V-05SVE2	(*1) Adjusting unit V-AD3S is mounted on stationary type.	NF32-SV NF63-CV, NF63-SV, NF63-HV	2P	–	–	Fig. 2	b	d	39	61	125	–	–	–	12.5	111	M4 screw or ϕ5	N
V-05SV V-05SVE		NF32-SV NF63-CV, NF63-SV, NF63-HV	3P	NV32-SV NV63-CV, NV63-SV, NV63-HV	2P, 3P			e				162	300		25			L
			4P	–	–													
V-1SV2, V-1SVE2		NF125-CV, NF125-SV	2P	–	–			d				–	–	–	15			N
V-1SV V-1SVE		NF125-CV, NF125-SV	3P	NV125-CV, NV125-SV NV125-HV	3P			e				162	300		30			L
			4P		4P			f										
		NF125-HV	2P, 3P	–	–			e										
			4P					f										
V-1UV V-1UVE		NF125-UV	2P, 3P	–	–			g	39					30.5		172		
			4P					h										
V-2SV V-2SVE		NF125-SEV, NF125-HEV, NF125-SGV NF125-LGV, NF125-HGV, NF125-RGV NF160-SGV, NF160-LGV, NF160-HGV NF250-CV, NF250-SV, NF250-HV NF250-SGV, NF250-LGV, NF250-HGV NF250-SEV, NF250-HEV, NF250-RGV	2P, 3P	NV125-SEV, NV125-HEV NV250-CV, NV250-SV, NV250-HV NV250-SEV, NV250-HEV	3P			e	41					–	35	126		K
			4P		4P			f										
V-2UV V-2UVE		NF250-UV	2P, 3P	–	–			g						37.5		201		
			4P					h										
V-03SVUL2	–	NF50-SVFU	2P	NV50-SVFU	2P	Fig. 1	a	d	39	61	125	–	–	–	9	82.5	M4 screw or ϕ5	M
V-03SVUL			3P		3P			e							18			N
V-05SVUL2	(*1) Adjusting unit V-AD3S is mounted on stationary type.	NF100-CVFU	2P	–	–	Fig. 2	b	d	39	61	125	–	–	–	12.5	111		N
V-05SVUL			3P	NV100-CVFU	3P			e				162	300		25			L
V-1SVUL		NF125-SVU, NF125-HVU	3P	NV125-SVU, NV125-HVU	3P	Fig. 2	b	g	39	61	125	162	300	6	30	123		L
V-2SVUL		NF250-SVU, NF250-HVU	3P	NV250-SVU, NV250-HVU	3P			e	41					–	35	126		K
V-2SUL		NF225-CWU	3P	–	3P					61	125	162	300		35	126		–
V-4S V-4SE	(*1) Adjusting unit V-AD3L is mounted on stationary type.	NF400-CW/SW/SEW/HEW/REW NF630-CW/SW/SEW/HEW/REW	2P, 3P, 4P	NV400-CW/SW/SEW/HEW/REW NV630-CW/SW/SEW/HEW	3P, 4P	Fig. 3	c	j	76	97	191	233	300	–	44	194	M6 screw or ϕ7	–
V-4U V-4UE		NF400-UEW	3P	–	–			h		194	288	330	397	20		234		
V-8S V-8SE		NF800-CEW/SDW/SEW/HEW/REW	2P, 3P, 4P	NV800-SEW/HEW	3P			j		97	191	233	300	–	70	243		
V-4SUL		NF400-SWU/HWU	3P	–	3P										44	194		
V-6SUL		NF630-SWU/HWU	3P	–	–										70	243		

Notes
*1 For the adjustable type, purchase the optional adjusting unit V-AD3S or V-AD3L.
*2 The dimensions of the adjustable type models provided with the adjusting unit V-AD3S or V-AD3L are shown.
*3 When using the operating handle for a plug-in type model with a frame size of 250A or below, specify so.
*4 The dimensions on the front connection type are shown. For the rear connection and plug-in types, separately consult us.
*5 The circuit breaker can be tripped by operating the trip button while the door is open. (The trip button position varies depending on the model.)
*6 The handle cannot be used when the circuit breaker is installed on IEC 35-mm rails.

Remarks:
1. The products whose model names contain E are designed for emergency stop. The delivery category is ●. That of V-05SVE is ●.
2. When the operating handle is fitted to NV, the test button cannot be pressed easily. If necessary, use a circuit breaker with TBL or TBM. When using an Earth Leakage Alarm Breaker, use the externally resetting type (ECA-SLT) or automatically resetting type (ARS).

●Installation procedure For details, please refer to Operating Handle Installation Manual supplied with the product.

① Installation to a breaker Install the operating handle to the circuit breaker in accordance with the following procedure.

	250A frame and below	400 to 800A frames
Installation procedure	**(Installation procedure)** ① Operating handle for 3- or 4-pole circuit breaker Set the rotary plate of the operating section to the OFF (symbol O) position, and fit the plate to the circuit breaker with the supplied operating section mounting screws and nuts. Install the circuit breaker to the panel with the circuit breaker mounting screws (2 pcs.). ② Operating handle for 2-pole circuit breaker Install the operating section together with the circuit breaker to the panel with the supplied operating section mounting screws (2 pcs.)	**(Installation procedure)** ① Remove the circuit breaker cover screws (4 pcs.) in the same positions as the operating handle mounting holes. ② Install the circuit breaker with the circuit breaker mounting screws (4 pcs.). ③ Fit the supplied operating section mounting spacers (4 pcs.) between the circuit breaker and operating handle. ④ Set the rotary plate to the OFF (symbol O) position, and install the operating section to the circuit breaker with the supplied operating section mounting screws.

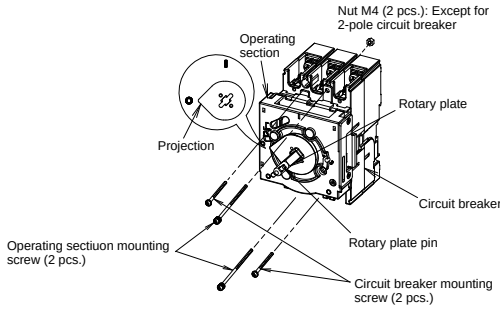

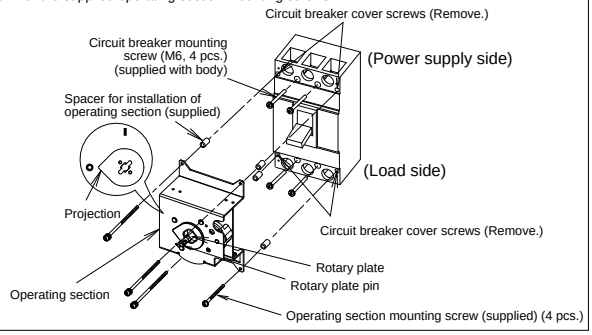

② Installation of operating handle section

Drill a hole in the door according to the dimensional drawing for front plate drilling given on the previous page, and install the operating handle section in accordance with the following procedure.

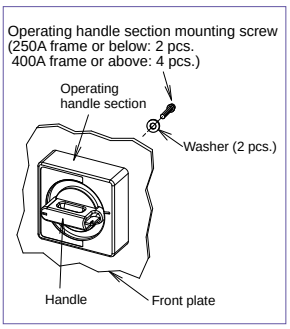

· Tighten the operating handle section from the back of the front plate. Temporarily tighten the screws to center the section in the hole.
· Set the handle of the operating handle section to the OFF state, tighten the front plate, and make sure that the handle can be smoothly turned to the ON and OFF positions.
Turn the handle to the right and left in the OFF state, and make sure that OFF is displayed. If OFF is not displayed, move the operating handle section up and down and to the right and left for adjustment. (Take care that the operating handle section is in parallel with the circuit breaker.) Then, open the front plate, and finally tighten the screws.

●Door locking mechanism

The operating handle is provided with an interlock mechanism to prevent the door opening in the ON and TRIP positions. In the OFF position, the door can be opened. However, the door can be opened in the ON or TRIP position by pressing the release knob in the arrow direction with a tool (3 mm wide and 1.8 mm thick).

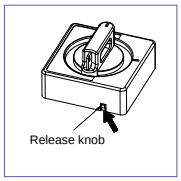

●Operation locking mechanism

① Operating handle section

Operation lock can be set only in the OFF Position. Up to three commercially available padlocks (A = 35 or 40 mm) can be fitted. Lockout hasps (scissors locks) can be used. When the operating handle section is locked with padlocks, also the door is locked.

② Operating section

The operating section can be locked so that the circuit breaker will not be turned on carelessly when the inside of the panel is inspected with the panel door open. Fit a padlock through the hole in the operating section of the operating handle.

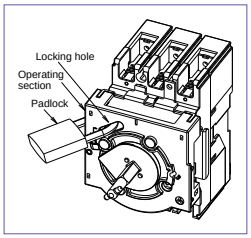

●Adjusting unit

The height from the circuit breaker mounting surface to the panel door can be adjusted by fitting the optional adjusting unit V-AD3S or V-AD3L. Cut the shaft of the adjusting unit according to the height.

Note The adjusting unit is not applicable to 2-pole external type circuit breakers. If it is used on a 2-pole external type circuit breaker, the positions may not be correctly displayed.

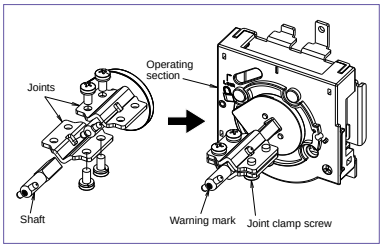

Make adjustments with the adjusting unit as stated below.

①External dimension drawing

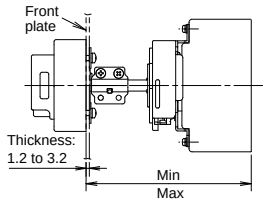

②Calculation of shaft cutting allowance

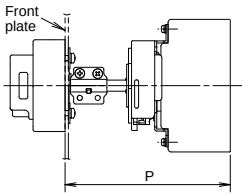

Type name	Dimensions (mm) Min	Dimensions (mm) Max	Cutting allowance	Calculation
V-05SV V-05SVUL V-1SV V-1SVUL V-1SUL V-2SV V-2SVUL V-2SUL	162	300	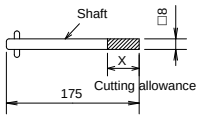	(Cutting allowance)(P max)(panel size) X = 300 mm - P
V-2SGUL	180	318		
V-4S V-8S V-4SUL V-6SUL	233	300	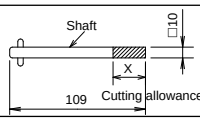	

Note The unit is applicable to operating handles for emergency stop (E).

●Padlocks

The user must prepare padlocks.
The dimensions of the padlocks are the same as those shown on page 752.

●How to order

Specify the model name of the operating handle.
For adjustable type, place an order for the adjustment unit. (One lot includes 1 pc.)
250A frame or below: V-AD3S
400 to 800A frames: V-AD3L

●Interpretation of model name

(1) For 800A frame or below

V – 1 S UL E 2
1) 2) 3) 4) 5) 6)

1) V: Operating handle type name
2) 1: Circuit breaker group (0.5, 1, 2, 4, 6 or 8)
3) S: Classification of circuit breaker (S, SV, H, U, UV)
4) UL: Blank···General product UL···UL 489 listed product
5) E: Blank···Standard E···For emergency stop
6) 2: Blank···3P or 4P 2···2P

Terminal Covers

The terminal covers are used to avoid exposure of live parts. Many kinds of terminal covers, including large terminal covers (TC-L), small terminal covers (TC-S), transparent terminal covers (TTC), rear terminal covers (BTC) and plug-in terminal covers (PTC), for various models and applications are available, and they are helpful. (The terminal covers cannot be fitted to electrically operated circuit breakers of spring charged type (2) and motor-drive type (2). The standard terminal covers can be used for the spring charged type (1). For the motor-drive type, special terminal covers can be manufactured. Consult us for details.)

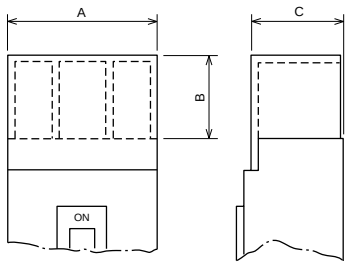

TC-L TC-S TTC

●Quick terminal covers

These covers are very convenient because they can be fitted only by inserting them into the mounting holes in the circuit breaker body. To remove the terminal cover, shift the projections of the terminal cover with the tip of a slotted screwdriver or finger, and draw it out.

●Table of variable dimensions

Table 22 Large terminal covers (TC-L)

Type name	Color	Number of poles of circuit breaker	Applicable model		Dimensions (mm)			Contents			Appearance	Remarks
			MCCB	ELCB	A	B	C	Number of covers	Cover mounting screw	Sealing plate		
TCL-03CS2W	White	2	NF30-CS	– (*1)	43.5	25	30.5	2	–	2	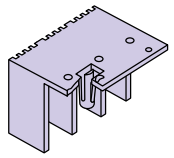 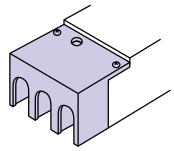 Quick type The cover can be sealed with the sealing plate.	
TCL-03CS3W	White	3		–	67	25	30.5	2	–	2		
TCL-05SV2 (*2)(*8)	White	2	NF32-SV NF63-CV/SV/HV	–	50	25	65.5	2	–	2		
TCL-05SV2L (*2)(*9)	White	2	NF32-SV NF63-CV/SV/HV	–	50	40	65.5	2	–	2		
TCL-05SV3 (*3)(*8)	White	3	NF32-SV NF63-CV/SV/HV	NV32-SV, NV63-HV	75	25	65.5	2	–	2		
	White	2, 3	–	NV63-CV/SV								
TCL-05SV3L (*3)(*9)	White	3	NF32-SV, NF63-CV/SV/HV	NV32-SV, NV63-HV	75	40	65.5	2	–	2		
	White	2, 3	–	NV63-CV/SV								
TCL-05SV4 (*3)	White	4	NF63-SV/HV	–	100	25	65.5	2	–	2		
TCL-1SV2 (*2)	White	2	NF125-CV/SV	–	60	40	65.5	2	–	2		
TCL-1SV3 (*3)	White	3	NF125-CV/SV	NV125-CV/SV/HV	90	40	65.5	2	–	2		
	White	2, 3	NF125-HV/UV	–								
TCL-1SV4 (*3)	White	4	NF125-SV/HV/UV	NV125-SV/HV	120	40	65.5	2	–	2		
TCL-2SV3 (*3)(*10)	White	2, 3	NF125-SGV/LGV/HGV/RGV NF160-SGV/LGV/HGV NF250-SGV/LGV/HGV/RGV NF250-CV/SV/HV/UV, NF250-SEV/HEV NF125-SEV/HEV	NV250-CV/SV/HV NV250-SEV/HEV NV125-SEV/HEV	105	40	65.5	2	–	2		
	White	3	(*6)									
TCL-2SV3L (*3)(*11)	White	2, 3	NF125-SGV/LGV/HGV/RGV NF160-SGV/LGV/HGV NF250-SGV/LGV/HGV/RGV NF250-CV/SV/HV/UV, NF250-SEV/HEV NF125-SEV/HEV	NV250-CV/SV/HV NV250-SEV/HEV NV125-SEV/HEV	105	50	65.5	2	–	2		
TCL-2SV4 (*3)(*5)	White	4	NF250-SV/HV/UV NF250-SEV/HEV NF125-SEV/HEV NF225-SWM (*6)	NV250-SV/HV NV250-SEV/HEV NV125-SEV/HEV	140	40	65.5	2	–	2		
TCL-4SW3 (*3)	White	2, 3	NF400-CW/SW/SEW NF630-CW/SW/SEW	NV400-CW/SW/SEW NV630-CW/SW/SEW	171	110	99.5	2	–	2		
	White	3	NF400-SEP with MDU (*7)	–								
			NF400-UEW (*4)	–	171	110	132.5/196.5	2	–			
TCL-4SW4 (*3)	White	4	NF400-SW/SEW/HEW NF630-SW/SEW NF400-SEP with MDU (*7)	NV400-SEW/HEW NV630-SEW	240	110	105	2	6	–	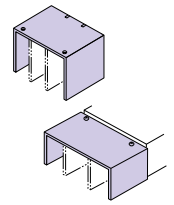 Screw type	Use in combination with insulating barrier.
TCL-8SW3 (*3)	White	2, 3	NF800-CEW/SDW/SEW/HEW/REW	NV800-SEW/HEW	224	155	103.5	2	4	–		
	White	3	NF600-SEP with MDU/HEP with MDU (*7) NF800-SEP with MDU/HEP with MDU (*7)	–								
TCL-8UW3	Transparent	3	NF800-UEW (*4)	–	220	155	146/194.5	2	4	–		
TCL-8SW4 (*3)	White	4	NF800-SEW/HEW NF600-SEP with MDU/HEP with MDU (*7) NF800-SEP with MDU/HEP with MDU (*7)	–	294	155	103.5	2	6	–		
TCL-8UW4	Transparent	4	NF400-UEW, NF800-UEW (*4)	–	290	155	146/194.5	2	6	–		
TCL-10SW3	Transparent	3	NF1000-SEW NF1250-SEW/SDW	–	220	150	139	2	4	–		
TCL-10SW4	Transparent	4	NF1000-SEW NF1250-SEW/SDW	–	290	150	139	2	4	–		
TCL-03SVU2 (*3)	White	2	NF50-SVFU	NV50-SVFU	36	30	65.5	2	–	–	Quick type (Remove the existing cover from the body, and fit the terminal cover.)	
TCL-03SVU3 (*3)	White	3	NF50-SVFU	NV50-SVFU	54	30	65.5	2	–	–		
TCL-05SVU2 (*2)(*8)	White	2	NF100-CVFU	–	50	25	65.5	2	2	–	Screw type	
TCL-05SU2L (*2)(*9)	White	2	NF100-CVFU	–	50	40	65.5	2	2	–		
TCL-05SVU3 (*3)(*8)	White	3	NF100-CVFU	NV100-CVFU	75	25	65.5	2	2	–		
TCL-05SVU3L (*3)(*9)	White	3	NF100-CVFU	NV100-CVFU	75	40	65.5	2	2	–		
TCL-1SVU3 (*3)	White	2, 3	NF125-SVU	–	90	40	65.5	2	2	–	Screw type (Remove the existing cover from the body, and fit the terminal cover.)	
		3	NF125-HVU	NV125-SVU/HVU								
TCL-2SVU3 (*3)(*10)	White	3	NF250-SVU/HVU	NV250-SVU/HVU	105	40	65.5	2	2	–	Screw type (Remove the existing cover from the body, and fit the terminal cover.)	
TCL-2SVU3L (*3)(*11)	White	3	NF250-SVU/HVU	NV250-SVU/HVU	105	50	65.5	2	2	–	Screw type (Remove the existing cover from the body, and fit the terminal cover.)	
TCL-2SWU3 (*10)	White	3	NF225-CWU	–	105	40	65.5	2	–	–	Quick type (Remove the existing cover from the body, and fit the terminal cover.)	
TCL-2SWU3L (*3)(*11)	White	3	NF225-CWU	–	105	50	65.5	2	–	–	Quick type (Remove the existing cover from the body, and fit the terminal cover.)	
TCL-4SWU	White	3	NF400-SWU/HWU	–	171	110	99.5	2	–	2	Quick type	
TCL-6SWU	Transparent	3	NF630-SWU/HWU	–	224	155	103.5	2	4	–	Screw type	Use in combination with insulating barrier.

Notes *1 For 2-pole NV, use TC-L for 3-pole circuit breaker.
*2 For a circuit breaker with F or V type operating handle, specify the model name with F at the end.
(F or V type operating handle dedicated models, screws are used for fixing.)
*3 The standard models can be used in combination with F and V Type Operating Handles.
*4 The dimension C is the size on the power supply side and load side.
*5 When a crimp terminal applicable to wires with a size of 117.2 to 152.05 mm^2 (Model 2CR-150 or CB150-S8) is used, TC-L cannot be fitted. Insulate the terminal from TC-S with insulating tube or taping.
*6 In the case of installation on the body, specify the model name with-MDU at the end.
*7 It cannot be installed in the case of installation on the body.
*8 Applicable to circuit breakers with rating of 75A or less (max. wire size 25 mm^2)
*9 Applicable to circuit breakers with rating of 125A or less (max. wire size 60 mm^2)
*10 Applicable to circuit breakers with rating of 200A or less (max. wire size 100 mm^2)
*11 Applicable to circuit breakers with rating of 250A or less (max. wire size 150 mm^2) (Applicable to UL wire 300MCM)

Remarks: 1. The wire sizes shown in the above notes *10 to *13 are those of the 600-V vinyl insulated wires.
2. Insulate the exposed live parts of crimp terminals with insulating tape or the like.
3. When protection from the power supply and load sides is necessary, separately consult us.

Table 23 Small terminal covers (TC-S)

Type name	Color	Number of poles of circuit breaker	Applicable model		Dimensions (mm)			Contents			Appearance	Remarks
			MCCB	ELCB	A	B	C	Number of covers	Cover mounting screw	Sealing plate		
TCS-03CS2W	White	2	NF30-CS	–	43.5	5	30.5	2	–	2	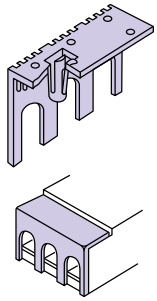 Quick type The cover can be sealed with the sealing plate.	
TCS-03CS3W	White	3		–	67	5	30.5	2	–	2		
TCS-05SV2 (*1)	White	2	NF32-SV, NF63-CV/SV/HV	–	50	5	65.5	2	–	2		
TCS-05SV3 (*2)	White	3	NF32-SV, NF63-CV/SV/HV	NV32-SV, NV63-HV	75	5	65.5	2	–	2		
	White	2, 3	–	NV63-CV/SV								
TCS-1SV2(*2)	White	2	NF125-CV/SV	–	60	6.5	65.5	2	–	2		
TCS-1SV3(*3)	White	3	NF125-CV/SV	NV125-CV/SV/HV	90	6.5	65.5	2	–	2		
	White	2, 3	NF125-HV/UV	–								
TCS-2SV3 (*2)	White	2, 3	NF125-SGV/LGV/HGV/RGV NF160-SGV/LGV/HGV NF250-SGV/LGV/HGV/RGV NF250-CV/SV/HV/UV, NF250-SEV/HEV NF125-SEV/HEV	NV250-CV/SV/HV NV250-SEV/HEV NV125-SEV/HEV	105	6.5	65.5	2	–	2		

Notes *1 For a circuit breaker with F type operating handle, specify the model name with F at the end.
(F type operating handle dedicated models, screws are used for fixing.)
*2 The standard models can be used in combination with F and V Type Operating Handles.

Remarks: 1. Small terminal covers for 4-pole circuit breakers are available.
2. Insulate the exposed live parts of crimp terminals with insulating tape or the like.

Table 24 Transparent terminal covers (TTC)

Type name	Number of poles of circuit breaker	Applicable model		Dimensions (mm)			Contents			Appearance	Remarks
		MCCB	ELCB	A	B	C	Number of covers	Cover mounting screw	Sealing plate		
TTC-03CS2	2	NF30-CS	–	43.5	25	30.5	2	–	2	Transparent 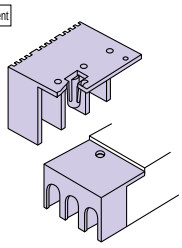 Quick type The cover can be sealed with the sealing plate.	
TTC-03CS3	3		–	67	25	30.5	2	–	2		
TTC-05SV2 (*1)	2	NF32-SV NF63-CV/SV/HV	–	50	25	65.5	2	–	2		
TTC-05SV3 (*2)	3	NF32-SV NF63-CV/SV/HV	NV32-SV, NV63-HV	75	25	65.5	2	–	2		
	2, 3	–	NV63-CV/SV								
TTC-1SV2 (*1)	2	NF125-CV/SV	–	60	40	65.5	2	–	2		
TTC-1SV3 (*2)	3	NF125-CV/SV	NV125-CV/SV/HV	90	40	65.5	2	–	2		
	2, 3	NF125-HV/UV	–								
TTC-2SV3 (*2)(*3)(*5)	2, 3	NF125-SGV/LGV/HGV/RGV NF160-SGV/LGV/HGV NF250-SGV/LGV/HGV/RGV NF250-CV/SV/HV/UV, NF250-SEV/HEV NF125-SEV/HEV	NV250-CV/SV/HV NV250-SEV/HEV NV125-SEV/HEV	105	40	65.5	2	–	2		
	3	–	–								
TTC-4SW3	2, 3	NF400-CW/SW/SEW NF400-HEW/REW NF630-CW/SW/SEW NF630-HEW/REW	NV400-CW/SW/SEW NV400-HEW/REW NV630-CW/SW/SEW NV630-HEW	171	110	104.5	2	4	–		
	3	NF400-SEP with MDU/HEP with MDU(*4)	–								
TTC-4SW4	4	NF400-SW/SEW/HEW NF630-SW/SEW/HEW NF400-SEP with MDU/HEP with MDU(*4)	NV400-SEW/HEW NV630-SEW	240	110	104.5	2	6	–	Transparent 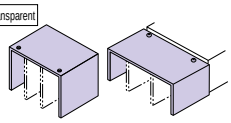 Screw type	Use in combination with insulating barrier.
TTC-8SW3	2, 3	NF800-CEW/SDW/SEW NF800-HEW/REW	NV800-SEW/HEW	224	155	103.5	2	4	–		
	3	NF600-SEP with MDU/HEP with MDU (*4) NF800-SEP with MDU/HEP with MDU (*4)	–								
TTC-8SW4	4	NF800-SEW/HEW NF600-SEP with MDU/HEP with MDU (*4) NF800-SEP with MDU/HEP with MDU (*4)	–	294	155	103.5	2	6	–		

Notes *1 For a circuit breaker with F type operating handle, specify the model name with F at the end.
(F type operating handle dedicated models, screws are used for fixing.)
*2 The standard models can be used in combination with F and V Type Operating Handles.

*3 When a crimp terminal applicable to wires with a size of 117.2 to 152.05 mm² (Model 2CR-150 or CB150-S8) is used, TTC cannot be fitted.
Use TCL-2SV3L. Or insulate the terminal from TC-S with insulating tube or taping.
*4 In the case of installation on the body, specify the model name with • MDU at the end.
*5 Applicable to circuit breakers with rating of 200A or less (max. wire size 100 mm²)

<BTC>

Fig. 1

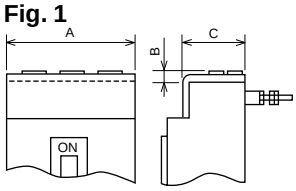

Fig. 2

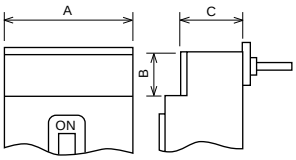

<PTC>

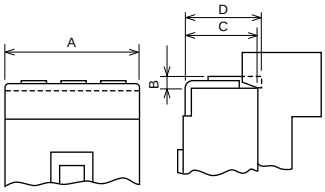

Table 25 Rear terminal cover (BTC)

Type name	Color	Number of poles of circuit breaker	Applicable model: MCCB	Applicable model: ELCB	Dimensions (mm): A	B	C	Contents: Number of covers	Cover mounting screw	Sealing plate	Appearance	Remarks
BTC-03CS2W	White	2	NF30-CS	–	43.5	6.5	30.5	2	–	2	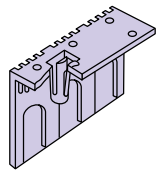	Cover for connection block in the case of simple rear connection
BTC-03CS3W	White	3		–	67	6.5	30.5	2	–	2		Cover for stud connection block on back in the case of rear connection type
BTC-05SV2	White	2	NF32-SV NF63-CV/SV/HV	– (*1)	50	5	65.5	2	–	2		
BTC-05SV3	White	3	NF32-SV NF63-CV/SV/HV	NV32-SV, NV63-HV	75	5	65.5	2	–	2		
	White	2, 3	–	NV63-CV/SV								
BTC-1SV2	White	2	NF125-CV/SV	–	60	6.5	65.5	2	–	2		
BTC-1SV3	White	3	NF125-CV/SV	NV125-CV/SV/HV	90	6.5	65.5	2	–	2		
	White	2, 3	NF125-HV/UV	–								
BTC-2SV3	White	2, 3	NF125-SGV/LGV/HGV/RGV NF160-SGV/LGV/HGV NF250-SGV/LGV/HGV/RGV NF250-CV/SV/HV/UV, NF250-SEV/HEV NF125-SEV/HEV	NV250-CV/SV/HV NV250-SEV/HEV NV125-SEV/HEV	105	6.5	65.5	2	–	2		
BTC-4SW3	White	2, 3	NF400-CW/SW/SEW NF630-CW/SW/SEW	NV400-CW/SW/SEW NV630-CW/SW/SEW	140	42 (*2)	99.5	2	–	2	Quick type The cover can be sealed with the sealing plate. 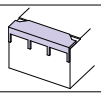	
	White	3	NF400-SEP with MDU (*5)	(*5)								
			NF400-UEW (*4)	–	140	42 (*2)	132.5/ 196.5	2	–			
BTC-4SW4 (*3)	Transparent	4	NF400-SW/SEW/HEW NF630-SW/SEW/HEW NF400-SEP with MDU/HEP with MDU (*5)	NV400-SEW/HEW NV630-SEW	185	42 (*2)	97.5	2	6	–	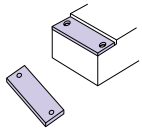 Screw type	
BTC-8SW3 (*3)	Transparent	2, 3	NF800-CEW/SDW/SEW/HEW/REW	NV800-SEW/HEW	210	32 (*2)	97.5	2	8	–		
	Transparent	3	NF600-SEP with MDU/HEP with MDU (*5) NF800-SEP with MDU/HEP with MDU (*5)	–								
			NF800-UEW (*4)	–	210	32 (*2)	146/ 194.5	2	4	–		
BTC-8SW4 (*3)	Transparent	4	NF800-SEW/HEW NF600-SEP with MDU/HEP with MDU (*5) NF800-SEP with MDU/HEP with MDU (*5)	(*5)	280	32 (*2)	97.5	2	10	–		
			NF400-UEW, NF800-UEW (*4)	–	280	32 (*2)	146/ 194.5	2	6	–		

Notes *1 For 2-pole ELCB, use BTC for 3-pole circuit breaker.
*2 Dimension B in Fig. 2
*3 The covers can be used for plug-in type circuit breakers. Other models are designed only for rear connection type.
*4 The dimension C is the size on the power supply side and load side.
*5 In the case of installation on the body, it can be fitted only on the power supply side.

Remarks: 1. PTC-4SW3 can be used as the back terminal covers for NF400-HEW/REW, NF630-HEW/REW, NV400-HEW/REW and NV630-HEW.
2. For terminal covers for 4-pole circuit breakers not listed above, consult us.

Table 26 Plug-in terminal covers (PTC)

Type name	Color	Number of poles of circuit breaker	Applicable model: MCCB	Applicable model: ELCB	Dimensions (mm): A	B	C	D	Contents: Number of covers	Cover mounting screw	Sealing plate	Appearance	Remarks
PTC-05SV2	White	2	NF32-SV NF63-CV/SV/HV	–	50	6.5	65.5	72	2	2	–	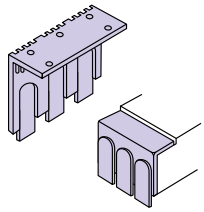 Screw type	Cover for stud connection block in the case of plug-in type
PTC-05SV3	White	3	NF32-SV NF63-CV/SV/HV	NV32-SV, NV63-HV	75	6.5	65.5	72	2	2	–		
	White	2, 3	–	NV63-CV/SV									
PTC-1SV2	White	2	NF125-CV/SV	–	60	6.5	65.5	–	2	4	–		
PTC-1SV3	White	3	NF125-CV/SV	NV125-CV/SV/HV	90	6.5	65.5	–	2	4	–		
	White	2, 3	NF125-HV/UV	–									
PTC-2SV3	White	2, 3	NF125-SGV/LGV/HGV/RGV NF160-SGV/LGV/HGV NF250-SGV/LGV/HGV/RGV NF250-CV/SV/HV/UV, NF250-SEV/HEV NF125-SEV/HEV	NV250-CV/SV/HV NV250-SEV/HEV NV125-SEV/HEV	105	6.5	65.5	78.5	2	4	–		
PTC-4SW3 (*2)	Transparent	2, 3	NF400-CW/SW/SEW NF630-CW/SW/SEW	NV400-CW/SW/SEW NV630-CW/SW/SEW	140	42	97.5	–	2	4	–	Same as screw type of BTC	
			NF400-HEW/REW (*1) NF630-HEW/REW (*1)	NV400-HEW/REW (*1) NV630-HEW (*1)									

Notes *1 The covers can be used as back terminal covers.
*2 See Fig. 2 of BTC.

Table 27 List of terminal covers applicable to F and V Type Operating Handles

Type name			Applicable operating handles	Number of poles of circuit breaker	Applicable model	
Large terminal covers (TC-L)	Small terminal covers (TC-S)	Transparent terminal covers (TTC)			MCCB	ELCB
TCL-05SV2F (*2)(*3) TCL-05SV2LF (*2)(*4)	TCS-05SV2F (*2)	TTC-05SV2F (*2)	F-05SV2, V-05SV2	2	NF32-SV, NF63-CV/SV/HV	– (*1)
TCL-05SV3 (*3) TCL-05SV3L (*4)	TCS-05SV3	TTC-05SV3	F-05SV, V-05SV	3	NF32-SV, NF63-CV/SV/HV	NV32-SV, NV63-HV
				2, 3	–	NV63-CV/SV
TCL-05SV4	–	–		4	NF32-SV, NF63-CV/SV/HV	–
TCL-1SV2F (*2)	TCS-1SV2F (*2)	TTC-1SV2F (*2)	F-1SV2, V-1SV2	2	NF125-CV/SV	–
TCL-1SV3	TCS-1SV3	TTC-1SV3	F-1SV, V-1SV	3	NF125-CV/SV	NV125-CV/SV/HV
				2, 3	NF125-HV/UV	–
TCL-1SV4	–	–		4	NF125-CV/SV/HV/UV	NV125-CV/SV/HV
TCL-2SV3 (*5) TCL-2SV3L (*6)	TCS-2SV3	TTC-2SV3	F-2SV, V-2SV	2, 3	NF250-CV/SV/HV/UV, NF250-SEV/HEV NF125-SEV/HEV	NV250-CV/SV/HV, NV250-SEV/HEV NV125-SEV/HEV
TCL-2SV4	–	–		4	NF250-CV/SV/HV/UV, NF250-SEV/HEV NF125-SEV/HEV	NV250-CV/SV/HV, NV250-SEV/HEV NV125-SEV/HEV
TCL-4SW3 TCL-4SP3W	–	TTC-4SW3	F-4S V-4S	2, 3	NF400-CW/SW/SEW/HEW/REW NF630-CW/SW/SEW/HEW/REW	NV400-CW/SW/SEW/HEW/REW NV630-CW/SW/SEW/HEW
TCL-4SW4	–	TTC-4SW4		4	NF400-SW/SEW/HEW NF630-SW/SEW/HEW	NV400-SEW/HEW NV630-SEW
TCL-8SW3	–	TTC-8SW3	F-8S V-8S	2, 3	NF800-CEW/SDW/SEW/HEW/REW	NV800-SEW/HEW
TCL-8SW4	–	TTC-8SW4		4	NF800-SEW/HEW	–

Notes *1 For 2-pole NV, use a terminal cover for 3-pole circuit breaker.
*2 Only for F and V Type Operating Handles (screw type)
*3 Applicable to circuit breakers with rating of 75A or less (max. wire size 25 mm²)
*4 Applicable to circuit breakers with rating of 125A or less (max. wire size 60 mm²)
*5 Applicable to circuit breakers with rating of 200A or less (max. wire size 100 mm²)
*6 Applicable to circuit breakers with rating of 250A or less (max. wire size 150 mm²)

Remark: 1. The terminal covers for UL 489 Listed Circuit Breakers can be normally combined with F Type Operating Handles.

Insulating Barriers

The insulating barrier enhances the insulation between the phases of circuit breaker terminals. It also prevents accidents due to conductive foreign matter and dust, and secondary accidents when isolating a fault current.

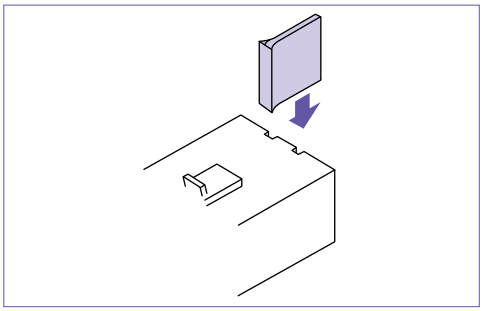

●The insulating barrier is available for the models listed in the table below.

Table 28

("●" denotes optional)

Applicable model		Connecting method			
MCCB	ELCB	Front	Rear	Flush plate	Plug-in
NF32-SV, NF63-CV NF125-CV, NF100-CVFU	NV32-SV, NV63-CV NV125-CV, NV100-CVFU	●	–	–	–
NF63-SV/HV NF125-SV/HV	NV63-SV/HV NV125-SV/HV	Standard attachment	–	–	–
NF125-SEV/HEV, NF125-ZEV NF250-CV/SV/HV/SEV/HEV NF125-SGV/LGV/HGV/RGV NF160-SGV/LGV/HGV NF250-SGV/LGV/HGV/RGV NF250-SEV/HEV/ZEV with MDU	NV125-SEV/HEV NV250-CV/SV/HV/SEV/HEV NV250-SEV/HEV with MDU	Standard attachment	–	–	Standard attachment
NF125-SVU NF125-HVU NF250-SVU NF250-HVU NF225-CWU	NV125-SVU NV125-HVU NV250-SVU NV250-HVU NV100-SWU	Standard attachment	–	–	–
NF400-CW/SW/SEW/HEW/REW/UEW NF630-CW/SW/SEW/HEW/REW	NV400-CW/SW/SEW/HEW/REW NV630-CW/SW/SEW/HEW	Standard attachment	●	●	Standard attachment
NF400-UEW(4P) NF800-CEW/SEW/HEW/REW/SDW	NV800-SEW/HEW	Standard attachment	●	●	●
NF800-UEW	–	Standard attachment	●	●	–
NF400-SWU/HWU NF630-SWU/HWU	–	Standard attachment	–	–	–
NF1000-SEW, NF1250-SEW/SDW	–	Standard attachment	–	–	Standard attachment
NF1600-SEW/SDW	–	Standard attachment	–	–	–

Always mount the insulating barrier when it comes with the circuit breaker.

●Insulating Barrier-Front (BA-F)

Table 29 Summary of dimensions

Type name	Applicable model		Dimensions (mm)		Quantity per breaker			Reference diagram
	MCCB	ELCB	A	B	2P	3P	4P	
BAF-05SV	NF32-SV NF63-CV NF125-CV	NV32-SV NV63-CV NV125-CV	50	59.5	1 (*2)	2	3	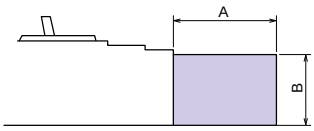
	NF63-SV/HV NF125-SV/HV/UV	NV63-SV/HV NV125-SV/HV						
BAF-2SV	NF125-SEV/HEV NF125-SGV/LGV/HGV/RGV NF160-SGV/LGV/HGV NF250-CV/SV/HV/UV/SEV/HEV NF250-SGV/LGV/HGV/RGV NF250-SEV/HEV/ZEV with MDU	NV125-SEV/HEV NV250-CV/SV/HV/SEV/HEV NV250-SEV/HEV with MDU	100	59.5	2	4	6	
BAF-05SVU	NF100-CVFU	NV100-CVFU	50	59.5	2	4	–	
	NF125-SVU NF125-HVU	NV125-SVU NV125-HVU						
BAF-2SVU	NF250-SVU NF250-HVU	NV250-SVU NV250-HVU	100	59.5	–	4	–	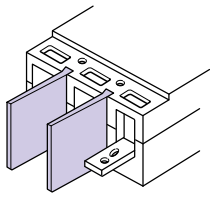
BAF-2SWU	NF225-CWU	–	100	59.5	–	4	–	
BAF-4SW	NF400-CW/SW/SEW/HEW/REW NF630-CW/SW/SEW/HEW/REW	NV400-CW/SW/SEW/HEW/REW NV630-CW/SW/SEW/HEW	110	98.5	2	4	6	
BAF-4UW (*1)	NF400-UEW(3P)	–	110	132/ 98.5	–	4	–	
BAF-8SW	NF800-CEW/SEW/SDW/HEW/REW	NV800-SEW/HEW	110	98.5	1	2	3	
BAF-10SW	NF400-UEW(4P) NF800-UEW, NF1000-SEW NF1250-SEW/SDW	–	110	132	1	2	3	
BAF-4SWU	NF400-SWU/HWU	–	110	98.5	–	4	–	
	NF630-SWU/HWU(less than 600A)	–	110	98.5	–	2	–	
BAF-6SWU	NF630-SWU/HWU(630A)	–	150	98.5	–	4	–	
BAF-16SW	NF1600-SEW/SDW	–	185	132	1	2	3	

Notes *1 The barriers BAF-4UW for the power supply and load sides vary in the dimension B.
*2 Not supplied with ELCB.

●Insulating Barrier-Rear (BA-B)

Table 30 Summary of dimensions

Type name	Applicable model		Dimensions (mm)		Quantity per breaker			Reference diagram
	MCCB	ELCB	A	B	2P	3P	4P	
BAB-4SW	NF400-CW/SW/SEW/HEW/REW NF400-UEW(3P) NF630-CW/SW/SEW/HEW/REW	NV400-CW/SW/SEW/HEW/REW NV630-CW/SW/SEW/HEW	140	74.5	–	4	6	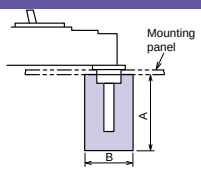
BAB-8SW	NF800-CEW/SEW/SDW/HEW/REW NF400-UEW(4P) NF800-UEW	NV800-SEW/HEW	140	74.5	–	4	6	

Drilling size for use of BA-B (in the case of 3-pole circuit breaker)

NF400-CW, NF400-SW, NF400-SEW, NF400-HEW, NF400-REW, NF400-UEW NV400-CW, NV400-SW, NV400-SEW, NV400-HEW, NV400-REW NF630-CW, NF630-SW, NF630-SEW, NF630-HEW, NF630-REW NV630-CW, NV630-SW, NV630-SEW, NV630-HEW	NF800-CEW, NF800-SEW, NF800-HEW, NF800-REW, NF800-UEW NV800-SEW, NV800-HEW
Power supply side Note The dimensions in brackets are those for NF400-UEW. 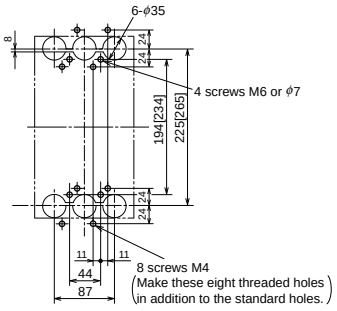 	Note The dimensions in brackets are those for NF800-UEW. 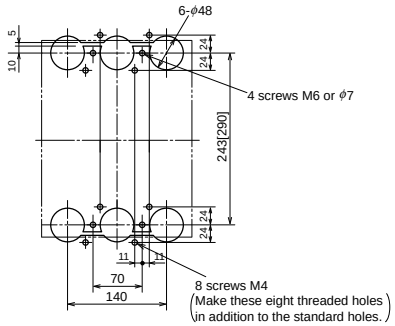

The drilling size drawings show the dimensions viewed from the rear side.

●Insulating Barrier-Plug-in (BA-P)

Table 31 Summary of dimensions

Type name	Applicable model		Dimensions (mm)		Quantity per breaker			Reference diagram
	MCCB	ELCB	A	B	2P	3P	4P	
BAP-2SV	NF125-SEV/HEV NF125-SGV/LGV/HGV/RGV NF160-SGV/LGV/HGV NF250-CV/SV/HV NF250-SGV/LGV/HGV/RGV NF250-SEV/HEV	NV125-SEV/HEV NV250-CV/SV/HV/SEV/HEV	172	74.5	4	4	6	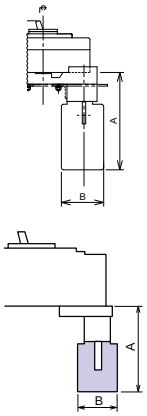
BAP-4SW	NF400-CW/SW NF400-SEW/HEW/REW/UEW NF630-CW/SW NF630-SEW/HEW/REW	NV400-CW/SW NV400-SEW/HEW/REW NV630-CW/SW NV630-SEW/HEW	178	74.5	–			
BAP-8SW	NF800-CEW/SEW NF800-HEW/REW	NV800-SEW/HEW	172	74.5				
	NF1000-SEW NF1250-SEW	–	215	74.5				

●Earth fault preventing barriers (BA-G)

Table 32 Summary of dimensions

Type name	Applicable model		Dimensions (mm)		Quantity per breaker	Reference diagram
	MCCB	ELCB	A	B	3P	
BAG-05SV3	NF32-SV NF63-CV/SV/HV	NV32-SV NV63-CV/SV/HV	30	75	1	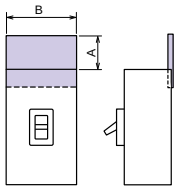 Earth fault preventing barrier (3 poles)
BAG-1SV3	NF125-CV/SV/HV	NV125-CV/SV/HV	40	90		
BAG-2SV3	NF125-SEV/HEV NF250-CV/SV/HV/SEV/HEV NF250-SEV/HEV/ZEV with MDU	NV125-SEV/HEV NV250-CV/SV/HV/SEV/HEV NV250-SEV/HEV with MDU	63	105		
BAG-4SW3	NF400-CW/SW/SEW/HEW/REW NF630-CW/SW/SEW/HEW/REW	NV400-CW/SW/SEW/HEW/REW NV630-CW/SW/SEW/HEW	63	164		
BAG-4UW3	NF400-UEW	–	63	164		
BAG-8SW3	NF800-CEW/SEW/SDW/HEW/REW	NV800-SEW/HEW	110	210		
BAG-8UW3	NF800-UEW	–	110	210		
BAG-10SW3	NF1000-SEW NF1250-SEW/SDW	–	98	210		
BAG-16SW3	NF1600-SEW/SDW	–	150	300		

Also the earth fault preventing barriers for 2- and 4-pole circuit breakers are available.

Handle Lock Devices, Lock Covers, Auxiliary Handles, Card Holders

(1) Handle Lock Devices (HL and HL-S)

These devices are used to lock the circuit breakers in the ON or OFF position. If overcurrent flows while the circuit breaker is locked, it will trip. Model HL (red resin moldings) to be fitted to handles and Model HL-S to be secured on circuit breaker covers are available. (Use a commercially available padlock having the nominal size shown in the right table. If a padlock in another size is used, the device may not lock correctly.)

Padlock size (mm)

Application	A (Nominal size)	B	C
a	25	11	4
b	35	19	5
c	40	22 or 23	5.5

Table 33 HL

Type name	Applicable model: MCCB	Applicable model: ELCB	Reference diagram	Padlock
HL-05FH	NF30-CS	–	Fig. 4	a
HLN-05SV	NF32-SV, NF63-CV/SV/HV NF125-CV/SV/HV/UV, NF125-SEV/HEV NF125-SGV/LGV/HGV/RGV NF160-SGV/LGV/HGV NF250-CV/SV/HV/UV, NF250-SEV/HEV NF250-SGV/LGV/HGV/RGV	NV32-SV, NV63-CV/SV/HV NV125-CV/SV/HV, NV125-SEV/HEV NV250-CV/SV/HV, NV250-SEV/HEV	Fig. 1	
HLF-05SV	NF32-SV, NF63-CV/SV/HV NF125-CV/SV/HV/UV, NF125-SEV/HEV NF125-SGV/LGV/HGV/RGV NF160-SGV/LGV/HGV NF250-CV/SV/HV/UV, NF250-SEV/HEV NF250-SGV/LGV/HGV/RGV	NV32-SV, NV63-CV/SV/HV NV125-CV/SV/HV, NV125-SEV/HEV NV250-CV/SV/HV, NV250-SEV/HEV		
HLF-05SVU	NF125-SVU/HVU NF250-SVU/HVU	NV125-SVU/HVU NV250-SVU/HVU		
		–		
HLF-2SWU	NF225-CWU	–		
HL-4CW (*1)	NF400-CW	NV400-CW	Fig. 2	c
HL-4SW (*1)	NF400-SW/SEW/HEW/REW/UEW NF630-CW/SW/SEW/HEW/REW NF800-CEW/SDW/SEW/HEW/REW/UEW	NV400-SW/SEW/HEW/REW NV630-CW/SW/SEW/HEW NV800-SEW/HEW		
HL-4SWU	NF400-SWU/HWU, NF630-SWU/HWU	–		
HL (*2)	NF1000-SEW, NF1250-SEW/SDW, NF1600-SEW/SDW	–	Fig. 3	

Notes *1 When a padlock is not used, the device can be used as a lock cover (LC).
*2 Place an order for a circuit breaker body combined with the device.

Remarks: 1. One lot of HL-4CW and HL-4SW contains one piece, and one lot of others contains 10 pieces.
2. HLF types are used for OFF lock, and HLN types for ON lock.

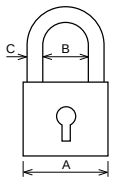

Padlock

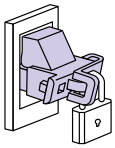
Fig. 1

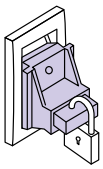
Fig. 2

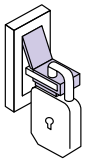
Fig. 3

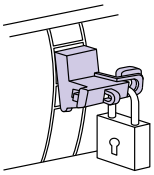
Fig. 4

Table 34 HL-S

Type name	Applicable model: MCCB	Number of poles	ELCB	Number of poles	Dimensions (mm) A	B	C	D	E	F	Reference diagram	Padlock
HLS-05SV2 (*1)	NF32-SV, NF63-CV, NF63-SV NF63-HV	2P	–	–	32	75	50	–	63	32	Fig. 5	b
	NF125-CV, NF125-SV	2P	–	–			57					
HLS-05SV (*1)	NF32-SV, NF63-CV, NF63-SV NF63-HV	3P	NV32-SV, NV63-HV	3P			75					
	NF63-SV,NF63-HV	4P	–	–				23				
	NF125-CV, NF125-SV	3P	NV125-CV, NV125-SV, NV125-HV	3P			86	–				
	NF125-HV	2P, 3P	–	–								
	NF125-SV, NF125-HV	4P	NV125-SV, NV125-HV	4P				28				
	NF125-UV	2P, 3P	–	–	62.5			–		1.5		
		4P	–	–				28				
HLS-2SV (*1)	NF125-SGV/LGV/HGV/RGV NF160-SGV/LGV/HGV NF250-CV, NF250-SV, NF250-HV NF250-SGV/LGV/HGV/RGV	2P	NV125-SEV, NV125-HEV NV250-CV, NV250-SV, NV250-HV NV250-SEV, NV250-HEV	3P	32	84	100	–		32		
	NF125-SEV, NF125-HEV NF125-SGV/LGV/HGV/RGV NF160-SGV/LGV/HGV NF250-CV, NF250-SV, NF250-HV NF250-SEV, NF250-HEV NF250-SGV/LGV/HGV/RGV	3P										
	NF125-SEV, NF125-HEV NF125-SGV/LGV/HGV/RGV NF160-SGV/LGV/HGV NF250-SV, NF250-HV, NF250-SEV, NF250-HEV NF250-SGV/LGV/HGV/RGV	4P	NV125-SEV, NV125-HEV NV250-SV, NV250-SEV, NV250-HEV	4P				33				
	NF250-UV	2P, 3P	–	–	69.5			–		-5.5		
		4P	–	–				33				
HLS-03SVU (*1)	NF50-SVFU	2P, 3P	NV50-SVFU	2P, 3P	–	–	–	–		32	Fig. 9	
HLS-05SVU2 (*1)	NF100-CVFU	2P	–	–	32	75	50	–			Fig. 5	
HLS-05SVU (*1)	NF100-CVFU	3P	NV100-CVFU	3P			75					
	NF125-SVU/HVU	2P, 3P	NV125-SVU/HVU	3P			86					
HLS-05SVU (*2)	NF125-SVU/HVU	2P, 3P	NV125-SVU/HVU	3P	32	75	86	–		32	Fig. 5	
HLS-2SVU (*1)	NF250-SVU/HVU	3P	NV250-SVU/HVU	3P		84	100					
HLS-2SWU (*1)	NF225-CWU	3P	–	3P		84	100	–		32	Fig. 6	
HLS-4SW (*3)	NF400-CW/SW/SEW/HEW/REW NF630-CW/SW/SEW/HEW/REW	2P, 3P, 4P	NV400-CW/SW/SEW/ HEW/REW NV630-CW/SW/SEW/ HEW	3P, 4P	–	–	–	–	–	–	Fig. 7	
HLS-4UW (*3)	NF400-UEW	3P	–	–	–	–	–	–	–	–		
HLS-8SW (*3)	NF800-CEW/SDW/SEW/HEW/REW	2P, 3P, 4P	NV800-SEW/HEW	3P, 4P	–	–	–	–	–	–		
HLS-8UW (*3)	NF400-UEW	4P	–	–	–	–	–	–	–	–	Fig. 8	
	NF800-UEW	3P, 4P										

Notes *1 For locking in OFF position
*2 A, B, C and D in Figs. 5 and 6 are drilling sizes in front plate.
*3 Terminal covers cannot be fitted.

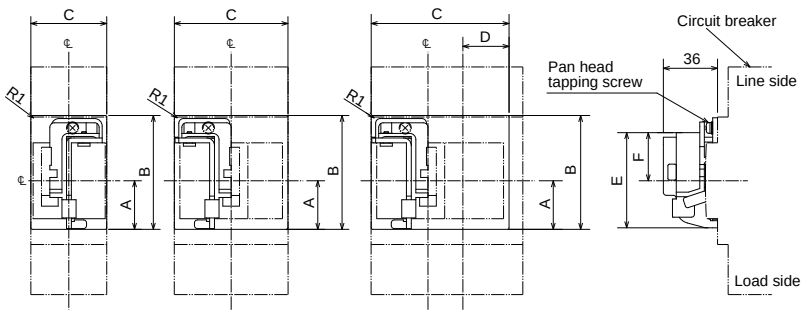

Fig. 5

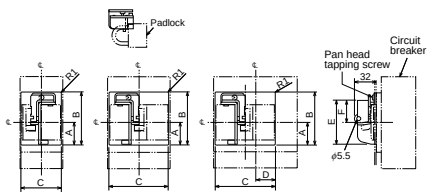

Fig. 6

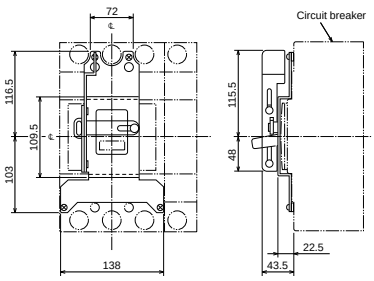

Fig. 7

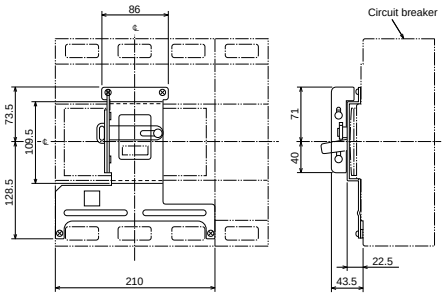

Fig. 8

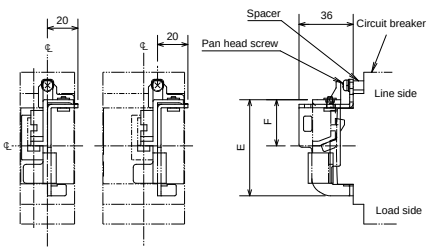

Fig. 9

(2) Lock Covers (LC)

Lock Cover is a plug-in lock for indicating easily without using padlocks that it is prohibited to operate the circuit breaker.
A "Caution" tag can be hung on it.
The covers are red resin moldings.

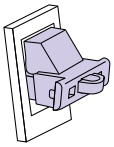

LC-05SW to LC-2SW

LCBH1

LCBH2, 3

Table 35 LC

Type name	Applicable model	
	MCCB	ELCB
LC03CS	NF30-CS	–
LC-05SV	NF32-SV NF63-CV/SV/HV NF125-CV/SV/HV/UV NF125-SEV/HEV NF125-SGV/LGV/HGV/RGV NF160-SGV/LGV/HGV NF250-CV/SV/HV/UV NF250-SEV/HEV NF250-SGV/LGV/HGV/RGV	NV32-SV NV63-CV/SV/HV NV125-CV/SV/HV NV125-SEV/HEV NV250-CV/SV/HV NV250-SEV/HEV
LCBH1R (red) LCBH1Y (yellow)	BH-P(1P)	–
LCBH2R (red) LCBH2Y (yellow)	BH-P(2P)	–
LCBH3R (red) LCBH3Y (yellow)	BH-P(3P)	–

Remark: 1. One lot of LCBH, LCBL and LCNVL contains 50 pieces, and one lot of other models contains 10 pieces.

(3) Auxiliary Handles (HT)

These handles facilitate opening and closing circuit breakers.

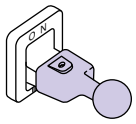

Auxiliary Handles

Table 36 HT

Type name	Applicable model	Dimensions					Outline dimension drawing
		A	B	C	D	E	
HT-4CW (*1)	NF400-CW, NV400-CW	59	77.5	32	38	M4	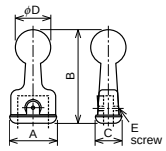
HT-4SW (*1) (*2)	NF400-SW/SEW/HEW/REW/UEW NF630-CW/SW/SEW/HEW/REW NF800-CEW/SDW/SEW/HEW NF800-REW/UEW NV400-SW/SEW/HEW/REW NV630-CW/SW/SEW/HEW NV800-SEW/HEW		81				
HT-10SW	NF1000-SEW NF1250-SEW/SDW NF1600-SEW/SDW	62	118	34	45	M4	

Notes *1 HT can be supplied separately. The user can fit it to the circuit breaker. (One lot contains 1 piece.)
*2 1-pole circuit breakers with 800A frame and 4-pole NF400-UEW come with auxiliary handles as standard accessories.

(4) Card Holders (CH)

Cards showing the circuit breaker name and circuit number can be inserted to the card holder.
Fit the card holder to the circuit breaker body or the flush plate in the flush frame. (Although a card holder is supplied with each circuit breaker body, the card holder is available as an optional part.)

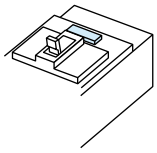

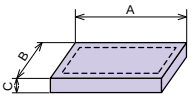

Table 37 Card holder size (mm)

Applicable model	Type name	A	B	C	Card size
NF250-SV or below NV250-SV or below	CH-P No.5	44	12	5	39×9
NF400-SW or above NV400-SW or above	CH-P No.3	38	22	5	33×20

Mechanical Interlocks (MI)

This mechanical interlock device is used to enable one of two circuit breakers to turn on. Install the device on the panel.
Mechanical interlocks to be installed directly to circuit breaker bodies can be manufactured.
Consult us for details.

●Front, rear and plug-in types

Front, rear and plug-in types (Panel mounting)
These interlocks can be locked with padlocks.

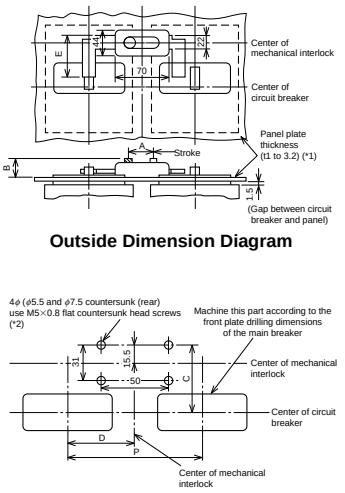

Fig. 1

Front, rear and plug-in types (Panel mounting)

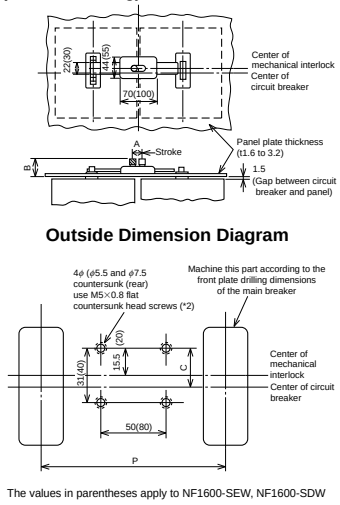

Fig. 2

Breaker mountiong (front)

Terminal covers cannot be fitted.

Type name	J
MI-05SVFB2	47.5
MI-1SVFB2	45

Type name	F	G	H
MI-05SVFB3	25	111	61
MI-05SWHFB3	25	111	75
MI-1SVFB3	30	111	61
MI-2SVFB3	35	126	61

Type name	F	G	P
MI-4SWFB3	44	194	190
MI-8SWFB3	70	243	260

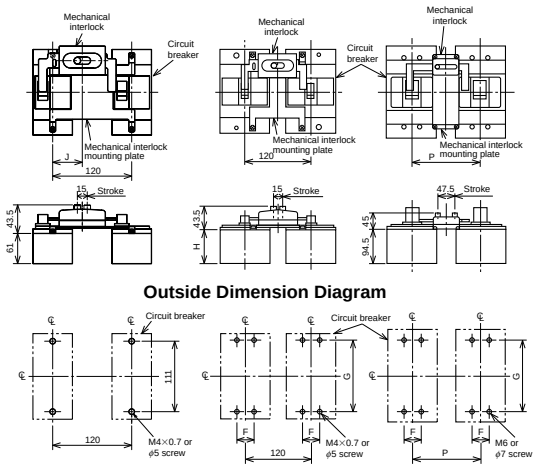

Fig. 3

Notes *1 For 400A frame or above, use a panel 1.6 to 3.2 thick.
*2 When the panel is 2.3 or more thick, countersink the panel (rear side) in ϕ9.5 for the four ϕ5.5 holes.

Table 38 Table of variable dimensions

Applicable model		Pitch (P) (*1)							Dimensions (mm)						Reference diagram	Breaker mount (*3)	Reference diagram (3P)
MCCB	ELCB (*6)	Standard			Semi-standard		Standard		t	A	B	C	D	E		Type name	
		Type name	2P	3P	3P		Type name	4P								2P•3P	
NF32-SV, NF63-CV/SV/HV	–	MI-05SV3	120	–	–	–	–	–	(*2) –	15	33	63	47.5	58	(Fig. 1)	MI-05SVFB2	(Fig. 3)
NF32-SV, NF63-CV/SV/HV	NV32-SV, NV63-CV/SV/HV		–	120	–	130	MI-05SV4	120 (*4)		15	33	63	–	58		MI-05SVFB3	
NF125-CV/SV	–	MI-05SV3	120	–	–	–	–	–		15	33	63	45	58		MI-1SVFB2	
NF125-CV/SV/HV	NV125-CV/SV/HV		–	120	130	150	MI-1SV4	130 (*4)		15	33	63	–	58		MI-1SVFB3	
NF125-UV	–									15	33	32.5		58		–	–
NF125-SEV/HEV NF125-SGV/LGV/HGV/RGV NF160-SGV/LGV/HGV NF250-CV/SV/HV, NF250-SEV/HEV NF250-SGV/LGV/HGV/RGV	NV125-SEV/HEV NV250-CV/SV/HV NV250-SEV/HEV	MI-05SV3	120 (*4)		150	180	MI-2SV4	150 (*4)		15	33	63	–	58		MI-2SVFB3	(Fig. 3)
NF250-UV	–											25.5				–	–
NF225-CWU	–	MI-05SWU3	–	120 (*4)	–	–	–	–		15	33	63	–	58		–	–
NF400-CW/SW/SEW/HEW/REW NF630-CW/SW/SEW/HEW/REW	NV400-CW/SW/SEW/HEW/REW NV630-CW/SW/SEW/HEW	MI-4SW3	190		–	210	MI-4SW4	250	(*2) –	47.5	33	83.5	–	74		MI-4SWFB3	(Fig. 3)
NF400-UEW (3P)	–		–	190			–	–				83.5				–	
NF800-CEW/SDW/SEW/HEW/REW	NV800-SEW/HEW	MI-8SW3	220		–	240	MI-8SW4	290		47.5	33	83.5	–	74		MI-8SWFB3	
NF400-UEW (4P) NF800-UEW	–		–	220								60				–	
NF1000-SEW, NF1250-SEW/SDW	–	MI-10SW3	220		–	–	MI-10SW4	290	2.3 (*5)	47.5	47	37.5	–	–	(Fig. 2)	–	–
NF1600-SEW/SDW	–	MI-16SW3	315		–	–	MI-16SW4	426		65	54.5	39	–	–		–	

Notes *1 Specify the circuit breaker mounting pitch (P).
*2 No need to specify the panel thickness (t). (Usable panel thickness range: t = 1~3.2mm. Above 400AF, use panel thickness t = 1.6~3.2mm)
*3 Terminal covers cannot be fitted. (However, TCL-4SW3 can be fitted.)
*4 When UVT is provided, separately install the module.
*5 If the thickness is not 2.3, specify the panel thickness (t).
*6 For NV with TBL, use a circuit breaker with MG.

Remarks: 1. When a mechanical interlock is installed on the panel, screw type terminal covers cannot be installed.
2. These devices do not provide an isolation function. However, 400, 600, 630 and 800A frame circuit breakers can be made conforming to it. (See Note 3.)
3. On a 2-pole circuit breaker obtained by removing the neutral pole conductor from a 3-pole circuit breaker, the mechanical interlock can be installed in the same manner as on a 3-pole circuit breaker.

Boxes for Circuit Breakers and Boxed Circuit Breakers

(1) Kinds and specifications

Table 39

			Closed type (S)		Dust-proof type (I)	Water-proof type (W)
Appearance			 (*1)	 (*1)		
MCCB (*2)	NF30-CS	2, 3P	NFS-03CS	–	–	–
	NF32-SV, NF63-CV/SV/HV	2P	NFS-05SV2 (*5)	–	NFI-05SV	–
		3P	NFS-05SV			NFW-05SV
	NF125-CV/SV	2P	NFS-1SV2 (*5)	–	NFI-1SV	–
		3P	NFS-1SV			NFW-1SV
	NF125-HV	2, 3P				NFW-1HV
	NF125-SGV/LGV NF160-SGV/LGV NF250-SGV/LGV NF250-CV/SV, NF125/250-SEV	2, 3P	NFS-2SV	–	NFI-2SV	NFW-2SV
	NF125/160/250-HGV NF250-HV, NF125/250-HEV		–			
	NF400-CW		–	–	NFI-4CW	NFW-4CW
	NF400-SW/SEW		–	–	NFI-4SW	NFW-4SW
	NF630-CW/SW/SEW		–	–	NFI-6SW	NFW-6SW
	NF800-CEW/SDW/SEW		–	–	NFI-8SW	NFW-8SW
ELCB (*2)	NV32-SV, NV63-CV/SV/HV	2P	NFS-05SV	–	NFI-05SV	–
		3P	NFS-05SV			NFW-05SV
	NV125-CV/SV	3P	NFS-1SV	–	NFI-1SV	NFW-1SV
	NV125-HV		NFS-1SV			NFW-1HV
	NV250-CV/SV, NV125/250-SEV		NFS-2SV	–	NFI-2SV	NFW-2SV
	NV250-HV, NV125/250-HEV		–			
	NV400-CW		–	–	NFI-4CW	NFW-4CW
	NV400-SW/SEW		–	–	NFI-4SW	NFW-4SW
	NV630-CW/SW/SEW		–	–	NFI-6SW	NFW-6SW
	NV800-SEW		–	–	NFI-8SW	NFW-8SW
Operating method			Direct operation of circuit breaker handle		Operation through operating handle mechanism	
Standard paint color			Box: Munsell 5Y7/1 Operating handle: Munsell N1.5			
Protection class (IEC 60529)			IP3X		IP4X (*3)	IP65 (*4)

Notes *1 The window frame varies depending on the model.
*2 For 1-pole circuit breakers, boxes are not manufactured.
*3 The protection class of NFI-1SV and NFI-2SV is IP3X.
*4 The protection class of NFW-4CW, NFW-4SW, NFW-6SW and NFW-8SW is IP54.
*5 The circuit breaker body is a 2-pole external type.
Remarks: 1. Only internal accessories with lead wires drawn out can be fitted. (However, LT and SLT can be fitted on the right pole side.)
2. The dust-proof type (I) models do not provide an isolation function.

●Selection of rated current

When selecting the rated current of circuit breaker, it is necessary to consider the temperature in the box. When the rated current is carried, the temperature in the box increases by 10 to 20K. Correct the rated current with the temperature correction curve.
Determine the maximum working current to be 80% or less of the rated current.

●Locking

Type I and W boxed circuit breakers can be provided with locks in the following parts. Locking can prevent unnecessary operation.
①Cover and case
②ON or OFF position of operating handle
(Padlocks must be prepared by the user. The dimensions of the padlocks are shown on page 739.)

●Interlock (only for Dust-proof type)

The cover cannot be opened while the circuit breaker is in the ON state. However, if the interlock release screw is turned, the cover is released from the locked state and can be opened even in the ON state.

●Handle operation and display

The ON, OFF or trip state of the body is displayed on each position on the decorative board.

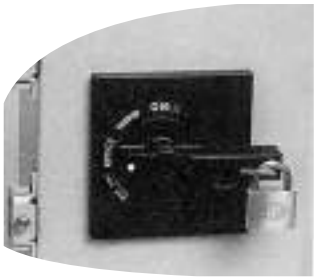

Example of Type I operating handle block

(2) External dimensions

■MCCB

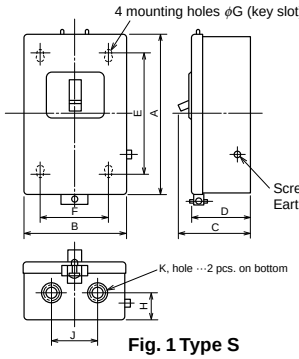

Fig. 1 Type S

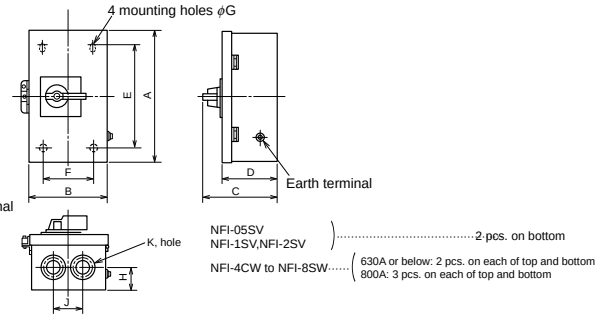

Fig. 3 Type I

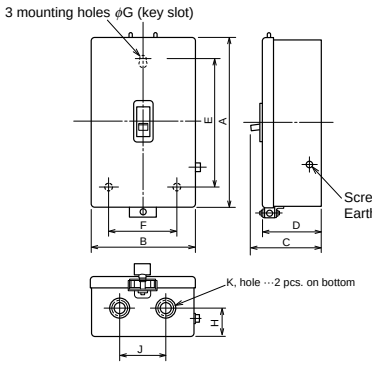

Fig. 2 Type S

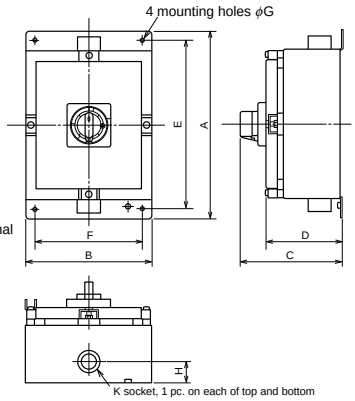

Fig. 4 Type W

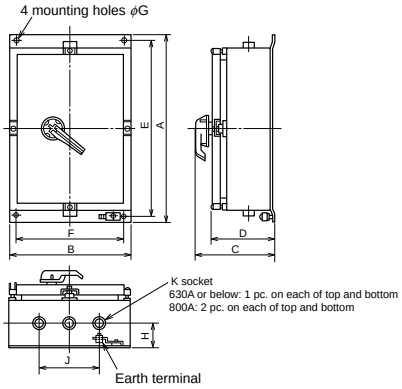

Fig. 5 Type W

Table 40 Table of variable dimensions (Boxes for 4-pole circuit breakers are not manufactured.) Note) The sockets are applicable to thick steel duct (JIS C 8305) and conduit tube thread.

Box type	Type name	Applicable Model	Variable dimensions										
			Fig.	A	B	C	D	E	F	G	H	J	K
S	NFS-03CS	NF30-CS	2	188	158	69	58	150	78	6	25	100	20, 28
	NFS-05SV2	NF32-SV, NF63-CV/SV/HV	1	260	178	98	78	202	100	7	34	100	28, 35, 44
	NFS-05SV												
	NFS-1SV2	NF125-CV/SV	1	310	178	98	78	252	100	7	34	100	28, 35, 44
	NFS-1SV	NF125-CV/SV/HV											
	NFS-2SV	NF250-CV/SV, NF125/250-SEV NF125-SGV/LGV NF160-SGV/LGV NF250-SGV/LGV	1	440	247	137	116	373	170	9	52	120	50, 62, 78
I	NFI-05SV	NF32-SV, NF63-CV/SV/HV	3	350	186	155.5	117	286	120	7	42	100	28, 35, 44
	NFI-1SV	NF125-CV/SV/HV	3	352	188	155.5	118	286	120	7	42	100	28, 35, 44
	NFI-2SV	NF250-CV/SV/HV, NF125/250-SEV/HEV NF125-SGV/LGV/HGV NF160-SGV/LGV/HGV NF250-SGV/LGV/HGV	3	442	248	162	124	373	170	9	54	120	50, 62, 78
	NFI-4CW	NF400-CW	3	730	320	244	191	650	240	11	87	120	50, 62, 78
	NFI-4SW	NF400-SW/SEW	3	730	320	244	191	650	240	11	65	120	50, 62, 78
	NFI-6SW	NF630-CW/SW/SEW	3	940	433	260	207	856	350	15	90	150	92
	NFI-8SW	NF800-CEW/SDW/SEW	3	1353	543	304	251	1270	460	15	90	320	104
W	NFW-05SV	NF32-SV, NF63-CV/SV/HV	4	390	265	214	160	350	225	9.5	45	–	28
	NFW-1SV	NF125-CV/SV	4	390	265	214	160	350	225	9.5	50	–	36
	NFW-1HV	NF125-HV	4	480	265	239	186	440	225	9.5	60	–	36
	NFW-2SV	NF250-CV/SV/HV, NF125/250-SEV/HEV NF125-SGV/LGV/HGV NF160-SGV/LGV/HGV NF250-SGV/LGV/HGV	4	550	355	264	210	510	315	11	75	–	54
	NFW-4CW	NF400-CW	5	800	355	257	220	760	315	11	85	–	70
	NFW-4SW	NF400-SW/SEW	5	800	355	257	220	760	315	11	85	–	70
	NFW-6SW	NF630-CW/SW/SEW	5	800	355	257	220	760	315	11	85	–	82
	NFW-8SW	NF800-CEW/SDW/SEW	5	1435	550	339	265	1395	515	15	100	180	104

■ELCB

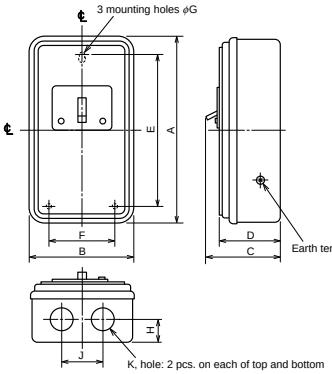

Fig. 1 Type S

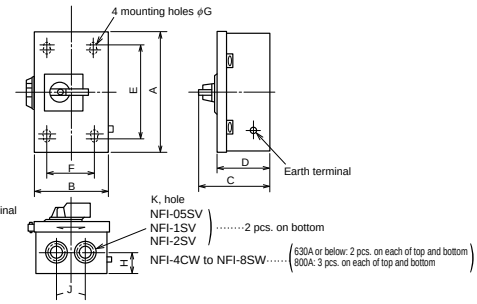

Fig. 3 Type I

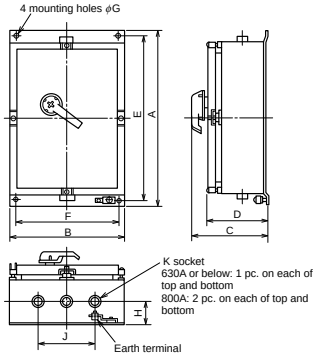

Fig. 5 Type W

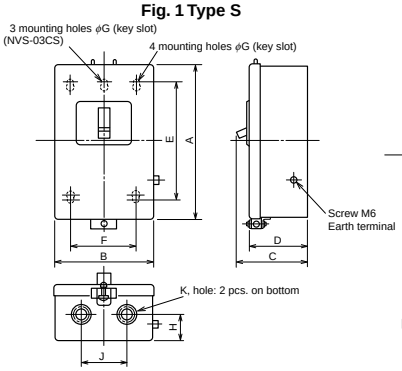

Fig. 2 Type S

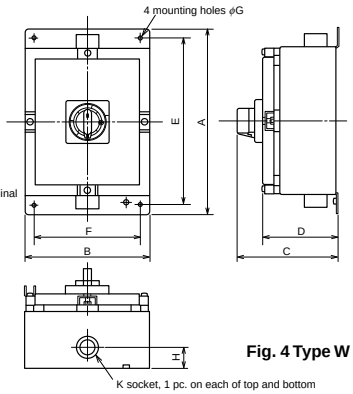

Fig. 4 Type W

Table 41 Table of variable dimensions (Boxes for 4-pole circuit breakers are not manufactured.) Note) The sockets are applicable to thick steel duct (JIS C 8305) and conduit tube thread.

Box type	Type name	Applicable Model	Variable dimensions										
			Fig.	A	B	C	D	E	F	G	H	J	K
S	NFS-05SV2	NV32-SV, NV63-CV/SV/HV	2	260	178	98	78	202	100	7	34	100	28, 35, 44
	NFS-05SV												
	NFS-1SV2	NV125-CV/SV	2	310	178	98	78	252	100	7	34	100	28, 35, 44
	NFS-1SV	NV125-CV/SV/HV											
	NFS-2SV	NV250-CV/SV, NV125/250-SEV	2	440	247	137	116	373	170	9	52	120	50, 62, 78
I	NFI-05SV	NV32-SV, NV63-CV/SV/HV	3	350	186	155.5	117	286	120	7	42	100	28, 35, 44
	NFI-1SV	NV125-CV/SV/HV	3	352	188	155.5	118	286	120	7	42	100	28, 35, 44
	NFI-2SV	NV250-CV/SV/HV, NV125/250-SEV/HEV	3	442	248	162	124	373	170	9	54	120	50, 62, 78
	NFI-4CW	NV400-CW	3	730	320	244	191	650	240	11	87	120	50, 62, 78
	NFI-4SW	NV400-SW/SEW	3	730	320	244	191	650	240	11	65	120	50, 62, 78
	NFI-6SW	NV630-CW/SW/SEW	2	940	433	260	207	856	350	15	90	150	92
	NFI-8SW	NV800-SEW	3	1353	543	304	251	1270	460	15	90	320	104
W	NFW-05SV	NV32-SV, NV63-CV/SV/HV	4	390	265	214	160	350	225	9.5	45	–	28
	NFW-1SV	NV125-CV/SV	4	390	265	214	160	350	225	9.5	50	–	36
	NFW-1HV	NV125-HV	4	480	265	239	186	440	225	9.5	60	–	36
	NFW-2SV	NV250-CV/SV/HV, NV125/250-SEV/HEV	4	550	355	264	210	510	315	11	75	–	54
	NFW-4CW	NV400-CW	5	800	355	257	220	760	315	11	85	–	70
	NFW-4SW	NV400-SW/SEW	5	800	355	257	220	760	315	11	85	–	70
	NFW-6SW	NV630-CW/SW/SEW	5	800	355	257	220	760	315	11	85	–	82
	NFW-8SW	NV800-SEW	5	1435	550	339	265	1395	515	15	100	180	104

Electrical Operated Circuit Breakers and Electrical Operation Devices

Spring charge type (1)

Spring charge type (2)
Standard paint color: Munsell 5Y7/1

Motor-drive type (2)
Standard paint color: Munsell 5Y7/1

(1) Specifications

●Electrically operated circuit breakers

Table 42

Specify the electrical operation device together with the circuit breaker body.

Electrically operating method		Spring charge type (1)	Spring charge type (2)		Motor-drive type (2)	
MCCB	Class S, H and R	NF125-SV, NF125-HV NF125-SEV, NF125-HEV NF125-SGV/LGV/HGV/RGV NF160-SGV/LGV/HGV NF250-SV, NF250-HV NF250-SEV, NF250-HEV NF250-SGV/LGV/HGV/RGV NF125-RV, NF250-RV	NF400-SW, NF400-SEW NF400-HEW, NF400-REW NF630-SW, NF630-SEW NF630-HEW, NF630-REW NF800-SDW, NF800-SEW NF800-HEW, NF800-REW	NF1000-SEW NF1250-SEW NF1250-SDW NF1600-SEW NF1600-SDW	NF400-SW, NF400-SEW NF400-HEW, NF400-REW NF630-SW, NF630-SEW NF630-HEW, NF630-REW NF800-SDW, NF800-SEW NF800-HEW, NF800-REW	NF1000-SEW NF1250-SEW NF1250-SDW NF1600-SEW NF1600-SDW
	Class C	NF125-CV NF250-CV	NF400-CW NF630-CW NF800-CEW	–	NF400-CW NF630-CW NF800-CEW	–
	Class U	NF125-UV NF250-UV	NF400-UEW NF800-UEW	–	NF400-UEW NF800-UEW	–
	Motor breakers	NF125-SV, NF250-SV	–	–	–	–
ELCB	Class S, H and R	NV125-SV, NV125-HV NV125-SEV, NV125-HEV NV250-SV, NV250-HV NV250-SEV, NV250-HEV	NV400-SW, NV400-SEW NV400-HEW, NV400-REW NV630-SW, NV630-SEW NV630-HEW, NF800-SEW NV800-HEW	–	NV400-SW, NV400-SEW NV400-HEW, NV400-REW NV630-SW, NV630-SEW NV630-HEW, NF800-SEW NV800-HEW (*3)	–
	Class C	NV125-CV NV250-CV	NV400-CW NV630-CW	–	NV400-CW(*3) NV630-CW	–
	Motor breakers	NV125-SV, NV250-SV	–	–	–	–
Rated operating voltage (V) (Allowable operating voltage range: 85 to 110%)		Compatible with 100 to 240 V AC and 100 to 250 V DC 24 V DC, 48 to 60 V DC (*1)	DC100-110, AC100-110 AC200-220(DC125, AC240)		DC100-110, AC100-110, AC200-220 (DC125, AC240)	
Operating current (Ams) Values in ( ): Starting current	DC 100/110V ON	0.5 (1.5)	8	10	3.0(8.0)	5.0(13.5)
	DC 100/110V OFF		1.0 (3.0)	1.0 (4.0)		
	AC 100/110V ON	0.6 (3.0)	10	10	4.0(8.0)	5.0(10.0)
	AC 100/110V OFF		1.0 (3.0)	1.0 (3.0)		
	AC 200/220V ON	0.5 (2.5)	8	8	2.0(4.5)	3.5(7.0)
	AC 200/220V OFF		0.5 (1.5)	0.5 (1.5)		
Operating time	s ON	0.05~0.1(*2)	0.05	0.07	0.3 or less (self-holding type)	
	s OFF	0.6 or less (self-holding type)	3 or less (self-holding type)			
	s Charge	1.2 or less (self-holding type)			–	–
Required transformer capacity VA		150	700		400	700
Endurance voltage		1500V	1500V			

Notes *1 When the rated operating voltage is 24 V DC or 48 to 60 V DC, specify the voltage. If the voltage is not specified, the circuit breaker will be manufactured for 100 to 240 V AC and 100 to 250 V DC.
*2 For 24-V DC circuit breakers, the operating time at a voltage of 100% or more is shown.
*3 Models for special voltage (125 V DC or 240 V AC) are not provided with the test button.

Remarks:
1. Flush plate type circuit breakers can be manufactured to order.
2. The models with voltage in parentheses are special voltage products.
3. For the spring charge type (1), use an ON-OFF operating switch for minute load.
4. For the spring charge type (1) The circuit breaker of 3 pole can be used TC-S, TC-L, TTC, BTC and PTC.
   In case of 125A frame 4 pole can be used only TC-L.
   In case of 250A frame 4 pole can be used TC-S, TC-L, TTC, BTC and PTC.
5. When the body of the spring charge type (1) breaker is an earth leakage alarm breaker, the reset button cannot be pressed. Provide such a circuit breaker with an external reset or automatic reset system (except for the electronic type).
6. When the body of the motor-drive type (2) or spring charge type (2) has internal accessories, they are normally provided with lead wire terminal blocks.
7. The types other than the spring charge type (1) do not provide an isolation function.
8. When placing an order for a CE marked product of the spring charge type (1) or spring charge type (2), specify the model name with CE.
9. The switching durability of electrically operated circuit breakers conforms to JIS.

●Electrical operation devices

The following models of Electrical Operation Devices are supplied also as separate devices. The user can install them to the circuit breaker body.
(Front connection, rear connection and plug-in types)
(When requiring a motor breaker or a CE marked product, place an order for it together with the circuit breaker body.)

Table 43

Electrically operating method	Spring charge type (1)				
Applicable models / Rated operating voltage	NF125-CV/SV/HV	NV125-CV/SV/HV	NF125-SEV/HEV/SGV/LGV/HGV/RGV NF160-SGV/LGV/HGV NF250-CV/SV/HV/UV/SEV/HEV/SGV/LGV/HGV/RGV NF250-UV	NV250-CV/SV/HV	NV125-SEV/HEV NV250-SEV/HEV
Compactible to 100-240VAC/100-250VDC	MDSAD240-NF1SVE	MDSAD240-NV1SVE	MDSAD240-NF2SVE	MDSAD240-NV2SVE	MDSAD240-NVE2SVE
24VDC	MDSD024-NF1SVE	MDSD024-NV1SVE	MDSD024-NF2SVE	MDSD024-NV2SVE	MDSD024-NVE2SVE
48-60VDC	MDSD060-NF1SVE	MDSD060-NV1SVE	MDSD060-NF2SVE	MDSD060-NV2SVE	MDSD060-NVE2SVE

●Cautions

- All electrical operations are based on intermittent rating. Avoid operating any device continuously 10 times or more (ON and OFF operations are counted as one time).
- Operate any device at 85 to 110% of the rated operating voltage.
- The dielectric strength of electrical operation circuits is 1500 V. When performing dielectric strength test of any of these devices and other devices, if the test voltage exceeds the rated value (1500 V), disconnect the operation power supply terminal.
- When collectively operating more than one electrical operation device, isolate the devices connecting a relay to each device.
  If the control terminals are directly connected in parallel, a circuit will be formed, and the devices may not normally function.

●Automatic reset (optional)

The automatic reset type has a built-in alarm switch in the circuit breaker and is connected in such a way that the OFF operation circuit is closed when the circuit breaker trips. Therefore, when the circuit breaker trips, it is automatically reset.
However, when the circuit breaker thermally trips, it may not be automatically reset.
If an automatic reset spring charge type (1) is required, the user must wire the device in accordance with the external connection diagram shown in Fig. 1 in (3).

(2) Installation and connection (List of manufacturable)

Table 44

Frame (A) \ Installation and connection method	Front connection type	Rear connection type	Plug-in type (*1)
50~250	○	○	○ (*2)
400~800	○	○	○
1000, 1250	○	○	○
1600	○	○	–

Notes *1 For ELCB, only 3-pole circuit breakers with a frame size of 125 to 400 A can be manufactured.
*2 In the case of 4-pole 125 A frame circuit breakers and U class, the circuit breakers are supplied as special models. Consult us for details.
Remarks: 1. All models of the front connection type are provided with bar terminals (except the spring charge type (1)).
2. 2-pole circuit breakers of all models are obtained by removing the neutral pole conductors from 3-pole circuit breakers.

(3) Structure and operation

■Spring charge type (1)

●Electrical operation

- When the ON operation switch is closed, the relay will operate, the motor will be driven, the latch mechanism will be released, and the closing spring force will instantaneously turn on the circuit breaker.
- When the OFF operation switch is closed, the relay will operate, the motor will be driven, the circuit breaker will be turned off (reset), and, at the same time, the closing spring will be charged.

Note: The charge may not be completed because the circuit protective function operates.

●Manual operation

- After turning the MANUAL/AUTO selection switch on the cover upper surface to MANUAL, press the ON button, and the latch mechanism will be released, and the closing spring force will instantaneously turn on the circuit breaker.
- After turning the MANUAL/AUTO selection switch on the cover upper surface to MANUAL, draw out the manual handle, and move it upward and downward about 10 to 14 times. Then, the circuit breaker will be turned off (reset), and, at the same time, the closing spring will be charged.
  Although the circuit breaker can be turned off even if the switch is not turned to MANUAL, the selection switch should be set to MANUAL because remote operation may be accepted.
- After turning the changeover switch to MANUAL, draw out the OFF lock plate, and lock the circuit breaker in the OFF state with padlocks (to be prepared by the user). Up to three padlocks can be fitted.
  ϕ5 to ϕ8 padlocks can be fitted.

Note: After the completion of manual operation (on-site operation), return the selection switch to AUTO without fail. If it is not returned, electrical operation (remote operation) cannot be performed.

●Display of tripping state

When the circuit breaker trips in the ON state, the tripping state is displayed. When it trips in the OFF state, the OFF state is kept displayed.
Note: When it trips in the OFF state, signals from AL will not be output.

●Cautions for use

① To the ON or OFF operation switch (to be prepared by the user), current only of 24 V DC and 15 to 30 mA flows. Use a switch for minute load.
② Operate the operation switch for 0.1 s or more to turn on and for 20 ms or more to turn off. If it is operated for less than the time, it may not function.
The wire to the operation switch shall be less than 100 m.
③ The power supply module has a built-in switching power supply. Therefore, it may interfere with communication devices near the module. In such a case, install a noise filter on the input side.
④ For the automatic reset type, purchase a circuit breaker with alarm switch (for minute load), and connect the signal circuit (among the terminal numbers S1, S2 and S4) as shown in Fig. 1.

If the circuit breaker in the OFF state is tripped by UVT-N or the like, it cannot be automatically reset. To reset it, it is necessary to turn it on under no current. After this operation, it will be automatically reset.

Fig. 1

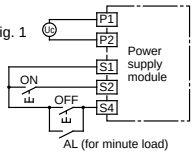

AL "a" (alarm switch for minute load)

Operation circuit

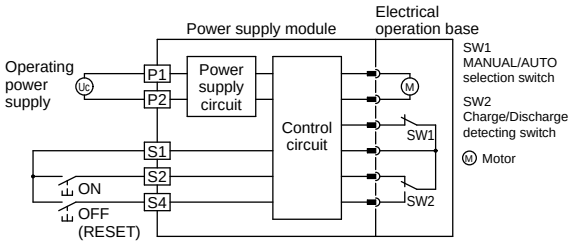

The circuit breaker is off, and the electrical operation device is in the charged state.

Symbol	Interpretation of symbol
SW1	MANUAL/AUTO selection switch
SW2	Limit switch (For spring condition detection charge/discharge)
Ⓜ	Motor

Note *1 When power is applied, inrush current (capacitor charging current) of 60 A flows to the breaker and fuse installed on the power supply circuit for 1 ms or so. When selecting the breaker and fuse, make sure that they will not cause problems, such as blowout and malfunction.

■Motor-drive type (2)

●Electrical operation

Forward and reverse motor rotation is changed by ball screw to switch the breaker ON and OFF (reset).

●Manual operation

The manual operation handle can be used to switch the breaker ON and OFF directly.

●Cautions for use

①In the case of a circuit breaker with UVT, if the circuit breaker trips owing to the operation of UVT, the procedure for re-closing the circuit breaker varies depending on the condition of the electrical operation device before the circuit breaker trips.
- Tripping in ON state: Reset (OFF). → Turn on.
- Tripping in OFF state: Turn on (idle tripping). → Reset (OFF). → Turn on.

(If the circuit breaker cannot be turned on (idle tripping), reset (OFF) it, and turn on.)
- When an automatic reset system is configured on a non-reset type circuit breaker with UVT, if UVT is set to the no-voltage state, the operations to turn off (reset), trip, turn off (reset) and trip are repeated. Therefore, configure the circuit in such a way that power is disconnected from the electrical operation device before the circuit breaker is tripped by the non-reset type UVT.

②Current of about 0.2 A will flow to the ON-OFF switch. Use an appropriate switch.

③Do not apply ON and OFF operation signals continuously.
An interval of 0.5 sec or more is necessary between ON and OFF signals.

④In the case of the automatic reset type device, it will perform the reset operation with an interval of 0.5 sec after NFB performs the tripping action.

⑤The electrical operation device has a built-in pumping preventing circuit. Therefore, it can operate to turn off the circuit breaker while the ON operation switch is held in the closing state, but it cannot turn on continuously after turning off. To turn on, once turn off the ON operation switch, and turn on the switch. Do not apply the ON operation signal continuously.

⑥The manual operating handle moves at a high speed during electrical operation. Pay attention to the handle. Keep the operation circuit power supply off during manual operation.

⑦In the manual operation, surely turn the manual operating handle to the position indicated on the nameplate.

●Operation circuit ···· For the automatic reset type, the connections indicated with the dashed lines are added.

●Operation circuit 1
[NF400-CW~NF800-UEW
NV400-CW~NV800-HEW]

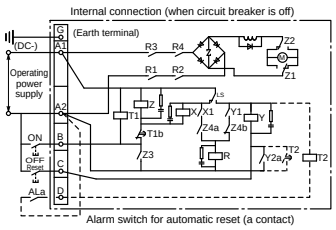

●Operation circuit 2
[NF1000-SEW~NF1600-SEW]

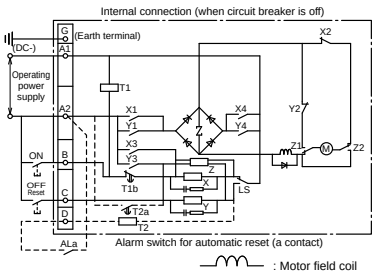

Ⓜ : Motor
X : Relay for ON operation
Y : Relay for OFF operation
R : Motor driving relay
Z : Polarity switching relay (Operation circuit 1 or 2)
(R1)~(R4): Relay switches

Z, K: Exciting coil of keep relay (Operation circuit 3)
LS, LS1, LS2: Limit switches
X1~X4, Y1~Y4, Y2a, Z4a, Z4b, Z1, Z2, Z3, K1, T1b, T2a: Relay switches
T_1 : Pumping preventing timer
T_2 : Timer for automatic reset

: Motor field coil
: Surge absorbing circuit
: Surge absorber

■Spring charge type (2)

●Electrical operation

When the ON operation switch is closed, the closing coil will be excited to release the latch mechanism, and the closing spring force will instantaneously turn on the circuit breaker. When the OFF operation switch is closed, the relay will operate to start the motor, turn off (reset) the circuit breaker and, at the same time, charge the closing spring.

●Manual operation

- Press the ON button, and the latch mechanism will be released, and the closing spring force will instantaneously turn on the circuit breaker.
- Turning off (resetting)
  Push the leaf spring, bring out the manual handle, and move the handle upward and downward more than ten times. Then, the circuit breaker will be turned off (reset), and, at the same time, the closing spring will be charged.

●Cautions for use

①In Before installing or removing the electrical operation device to or from the circuit breaker, trip the circuit breaker, and discharge the electrical operation device. After the device is installed to the circuit breaker, the device will not trip the circuit breaker in the OFF state even if the trip button is pressed. This is not a trouble. The electrical operation device takes 3 seconds to turn off the circuit breaker. To open the circuit immediately by remote operation, use a circuit breaker with SHT or UVT.
- The device has a built-in pumping preventing relay.

②Current of about 9 A and 0.2 A will flow to the ON and OFF switches, respectively. Use appropriate switches.

Internal structure of spring charge type

Internal structure of motor-drive type

●Operation circuit

For the automatic reset type, the connections indicated with the dashed lines are added.

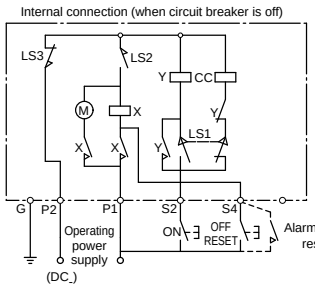

CC : Coil for making
Y : Relay for pumping prevention
X : Relay for self-sustaining on OFF side
LS1: Limit switch interlocking with cam
LS2: Limit switch interlocking with cam
LS3: Limit switch interlocking with OFF lock plate
M : Motor

Distribution Board Mounting Parts, Lock Covers and Handle Caps

●BPA-type mounting base (for BH-P)

Single-phase-type

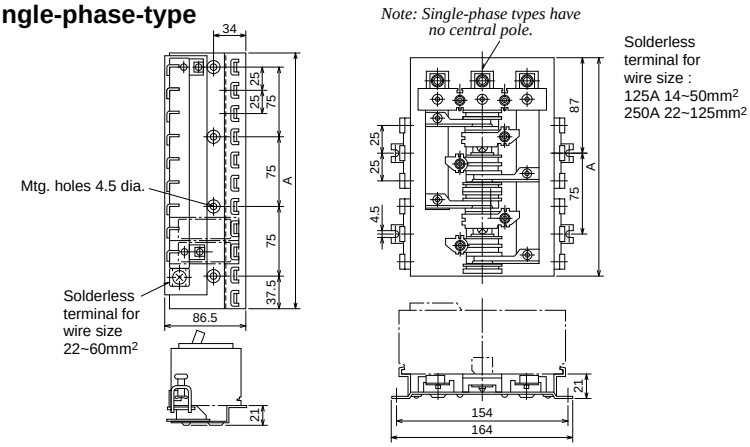

Three-phase-type

Max. no. of ways	1ph, 2w	1ph, 3w		3ph, 4w		Neutral terminal
	Main : 125A	Main : 125A	Main : 250A	Main : 125A	Main : 250A	
6	BPA-1106	BPA-2106	–	BPA-3106	–	NT-06
9	BPA-1109	–	–	–	–	–
12	BPA-1112	BPA-2112	–	BPA-3112	–	NT-12
15	BPA-1115	–	–	–	–	–
18	BPA-1118	BPA-2118	BPA-2218	BPA-3118	BPA-3218	NT-18
24	–	BPA-2124	BPA-2224	BPA-3124	BPA-3224	NT-24
30	–	–	BPA-2230	–	BPA-3230	NT-30
36	–	–	BPA-2236	–	BPA-3236	NT-36
42					BPA-3242	NT-42

●Mounting plate (for BH)

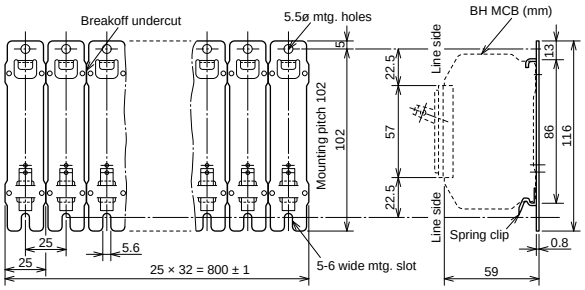

One mounting plate has 32 circuits.
One package includes 10 mounting plates (320 circuits).

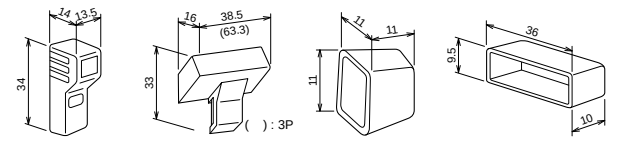

a) Lock cover for 1-pole units
b) Lock cover for 2-pole, 3-pole units
c) Handle cap for 1-pole units
d) Handle cap for 2-pole units

Outlines and dimensions (mm)

Colors available

Fig. ref.	Item	Poles	Colors		
			Red	Yellow	Green
a)	Lock cover	1	LCBH1R	LCVH1Y	–
b)		2	LCBH2R	LCBH2Y	–
b)		3	LCBH3R	LCBH3Y	–
c)	Cap	1	HC1R	HC1Y	HC1G
d)		2	HC2R	HC2Y	HC2G

●Lock covers and handle caps (for 1-pole, 2-pole and 3-pole types)

Many panelboards include some restricted-operation circuits, which must either normally remain on, such as all-night lighting or alarms, or must remain off, such as spare circuits, or circuits used in repair or construction work. Breakers for such circuits can be locked by simply installing a lock cover on the handle.

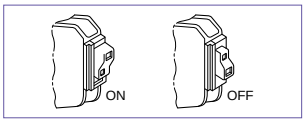

Lock cover in place (1-pole unit)

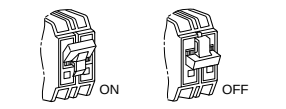

Lock cover in place (2-pole unit)

IEC 35-mm Rail Mounting Adapters

Table 45

Type name	Number of poles of circuit breaker	Applicable model		Fig.
		MCCB	ELCB	
DIN-03CS	2, 3	NF30-CS	–	Fig. 1
(Note1) DIN-05SV	2, 3	NF32-SV NF63-CV/SV/HV	NV32-SV NV63-CV/SV/HV	Fig. 2

Remark: 1. Place an order in units of 10 pieces.

●External dimension

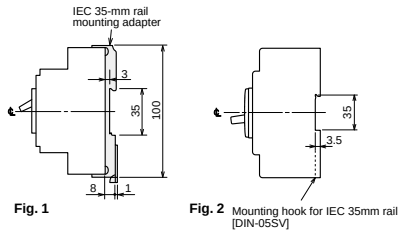

Fig. 1 Fig. 2

Molded Case Circuit Breakers

NF30-CS

NF30-CS

Model				NF30-CS	
Rated current In (A)				3, 5, 10, 15, 20, 30	
Number of poles				2	3
Rated insulation voltage Ui (V)				500	
Rated short-circuit breaking capacity (kA)	IEC 60947-2 (Icu/Ics)	AC	690V	–	
			500V	–	
			415V	1.5/1.5	
			380V	1.5/1.5	
			240V	2.5/2	
Standard Attached Parts (Front connection)				Mounting screw: M4×0.7×20 (2pcs)	

Operating Characteristics

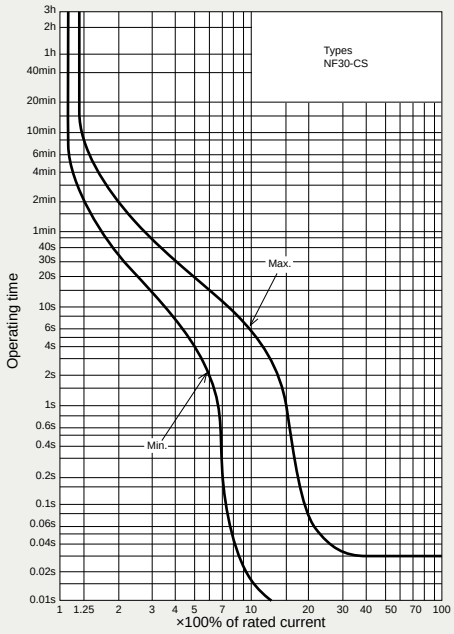

Internal Accessories

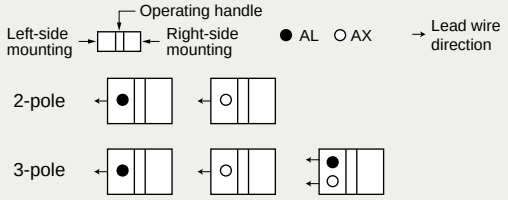

Remark: 1. Standard lead wire is drawn from side. However, lead wire drawn by load can be produced upon request.

Temperature Characteristics Curve

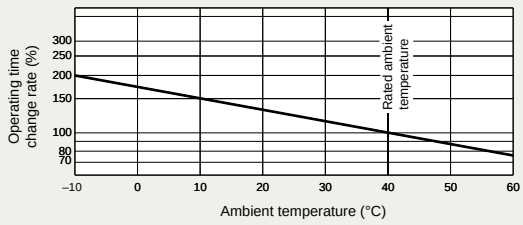

External Accessories

Accessories			Type name
Terminal cover	Small	(TC-S)	TCS-03CS3W (*1)
	Large	(TC-L)	TCL-03CS3W (*1)
	Rear	(BTC)	BTC-03CS3W (*1)
	Skeleton	(TTC)	TTC-03CS (*1)
Handle lock		(HL)	HL-05FH
Lock cover		(LC)	LC03CS
IEC 35mm rail mounting adapter		(DIN)	DIN-03CS

Note *1 The designation depends on the number of poles.

Outline Drawing

Front connection

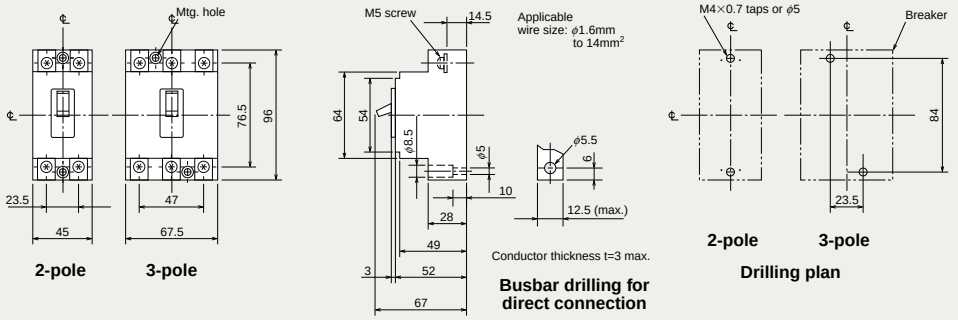

Rear connection

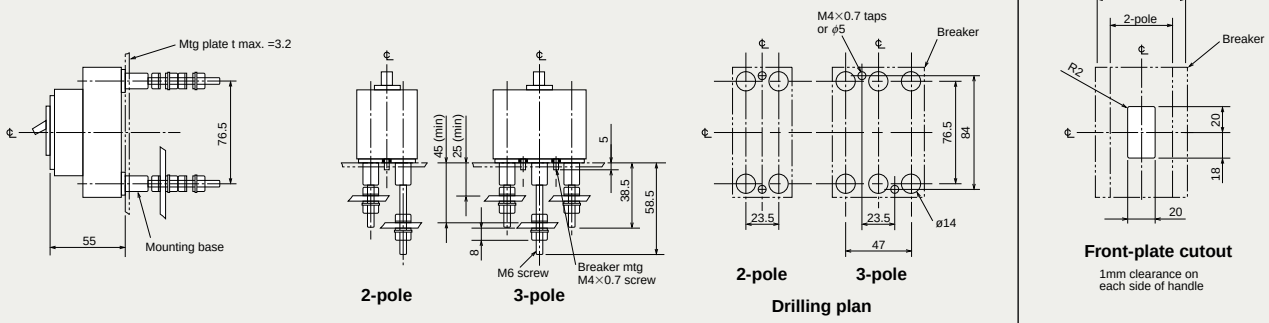

IEC Rail Mounting Adapter

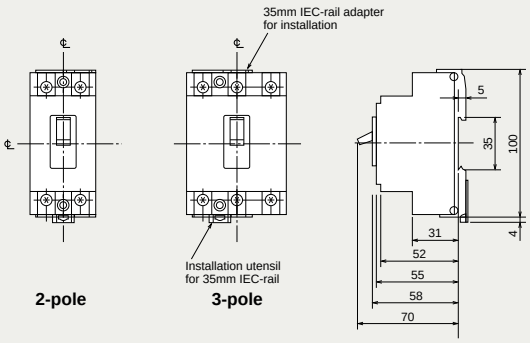

NF32-SV NF63-CV NF63-SV NF63-HV

NF63-SV

Model				NF32-SV		NF63-CV		NF63-SV			NF63-HV		
Rated current In (A)				3 4 (5) 6 10 (15) 16 20 25 (30) 32		3 4 (5) 6 10 (15) 16 20 25 (30) 32 40 50 (60) 63		3 4 (5) 6 10 (15) 16 20 25 (30) 32 40 50 (60) 63			10 (15) 16 20 25 (30) 32 40 50 (60) 63		
Number of poles				2	3	2	3	2	3	4	2	3	4
Rated insulation voltage Ui (V)				600		600		600			690		
Rated short-circuit breaking capacity (kA)	IEC 60947-2 (Icu/Ics)	AC	690V	–		–		–			2.5/2.5		
			500V	2.5/2.5		2.5/2.5		7.5/7.5			7.5/7.5		
			440V	2.5/2.5		2.5/2.5		7.5/7.5			10/8		
			415V	2.5/2.5		2.5/2.5		7.5/7.5			10/8		
			400V	5/5		5/5		7.5/7.5			10/8		
			380V	5/5		5/5		7.5/7.5			10/8		
			230V	7.5/7.5		7.5/7.5		15/15			25/19		
		DC	250V (*1)	2.5/2.5		2.5/2.5		7.5/7.5			7.5/7.5		
Standard attached parts (front connection)				Mounting screw: M4×0.7×55 (2 and 3P: 2pcs, 4P: 4pcs) Insulation barrier: (2P: 1pc, 3P: 2pcs, 4P: 3pcs) (*2)									

Notes *1 Use two poles for three- and four-pole products. Not available for use with connection as shown at the bottom of page 672.
*2 Supplied with NF63-SV and NF63-HV.

Operating Characteristics

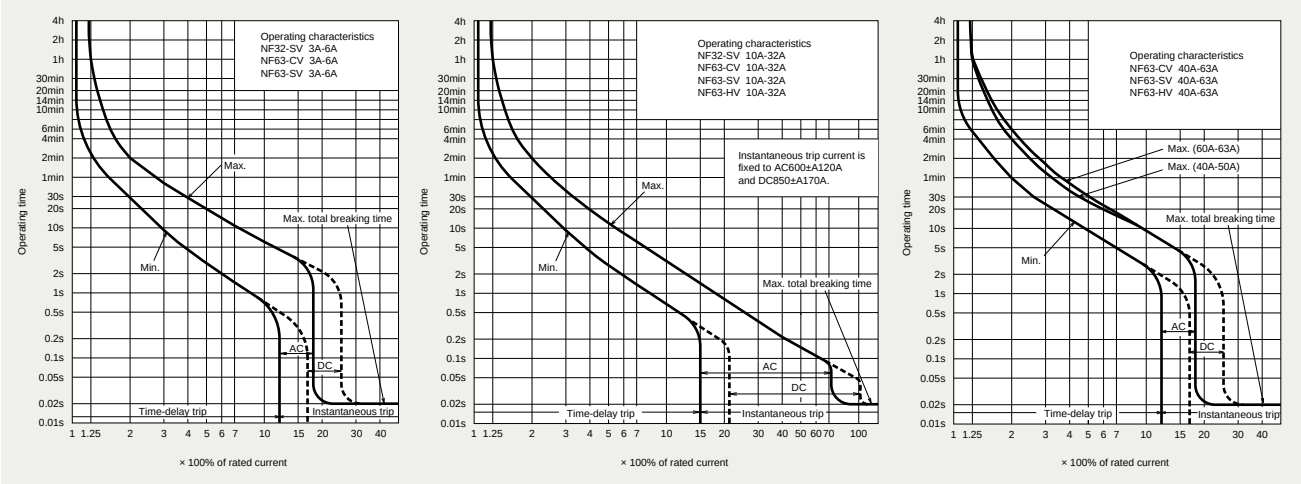

Internal Accessories

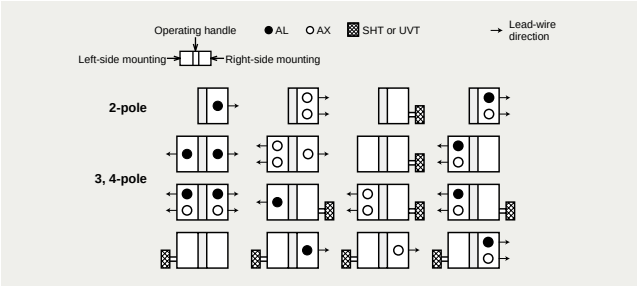

Temperature Compensation Curve

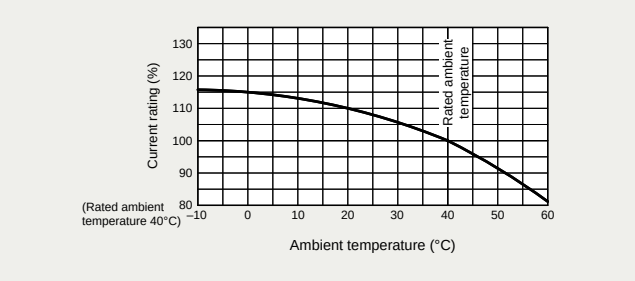

External Accessories

Accessories			Type name
Operating handle	F	2P	F-05SV2
		3, 4P	F-05SV
	V	2P	V-05SV2
		3, 4P	V-05SV
Handle lock device	LC		LC-05SV
	HL (*1)		HLF-05SV
			HLN-05SV
	HL-S		HLS-05SV

Note *1 HLF types are used for OFF lock and HLN types for ON lock.

Accessories				Type name
Mechanical interlock		MI	2, 3P	MI-05SV3
			4P	MI-05SV4
Terminal cover	Small	TC-S	2P	TCS-05SV2
			3P	TCS-05SV3
	Large	TC-L	2P	TCL-05SV2
				TCL-05SV2L
			3P	TCL-05SV3
				TCL-05SV3L
			4P	TCL-05SV4
	Skeleton	TTC	2P	TTC-05SV2
			3P	TTC-05SV3
	Rear	BTC	2P	BTC-05SV2
			3P	BTC-05SV3
	Plug-in	PTC	2P	PTC-05SV2
			3P	PTC-05SV3
IEC 35mm rail mounting adapters				DIN-05SV

Outline Drawing

Front connection

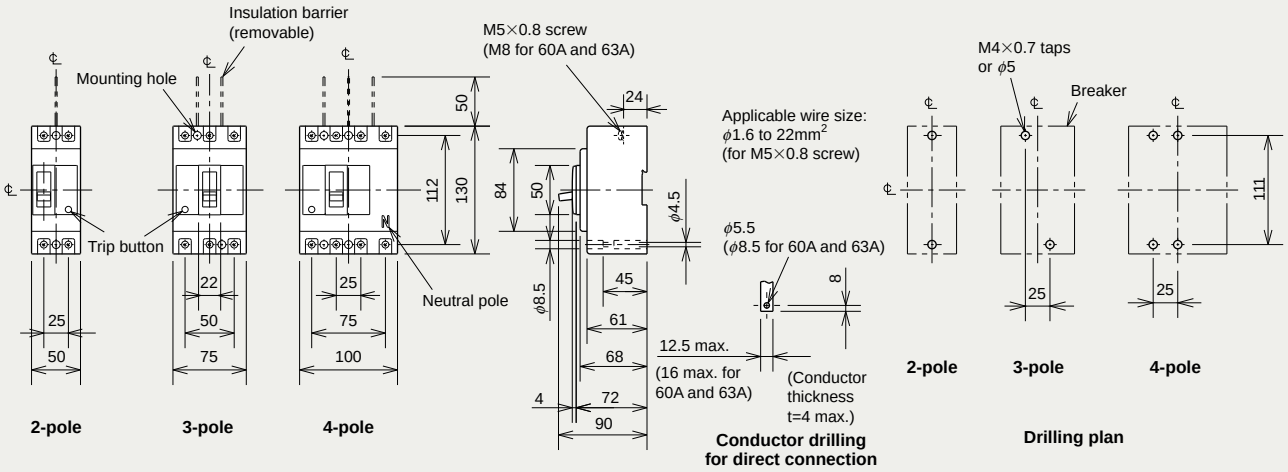

Rear connection

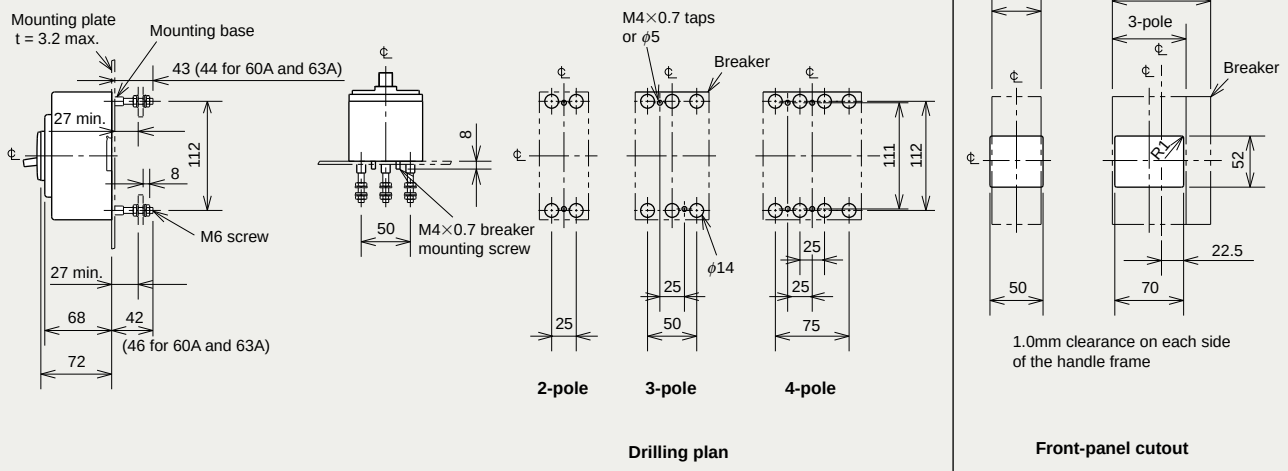

Plug-in

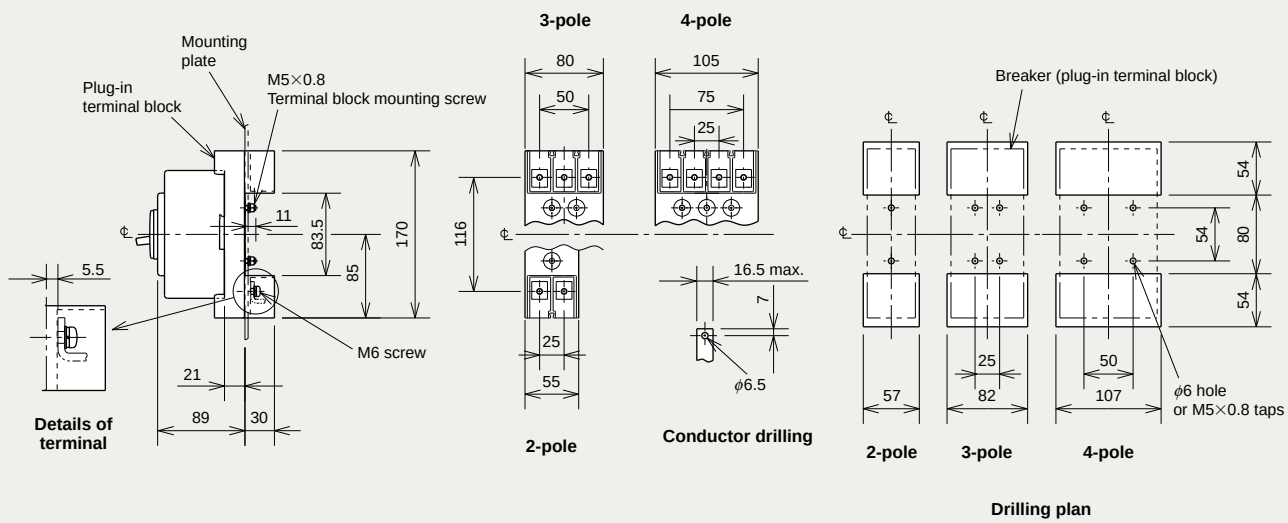

Remark: 1. Only 2-pole and 3-pole models are available for NF32-SV and NF63-CV.

NF125-CV NF125-SV NF125-HV

NF125-SV

Model				NF125-CV		NF125-SV			NF125-HV		
Rated current In (A)				50 (60) 63 (75) 80 100 125		(15) 16 20 (30) 32 40 50 (60) 63 (75) 80 100 125			(15) 16 20 (30) 32 40 50 (60) 63 (75) 80 100 125		
Number of poles				2	3	2	3	4	2	3	4
Rated insulation voltage Ui (V)				600		690			690		
Rated short-circuit breaking capacity (kA)	IEC 60947-2 (Icu/Ics)	AC	690V	–		8/8			10/8		
			500V	7.5/4		18/18			30/23		
			440V	10/5		25/25			50/38		
			415V	10/5		30/30			50/38		
			400V	10/5		30/30			50/38		
			380V	10/5		30/30			50/38		
			230V	30/15		50/50			100/75		
		DC	250V (*1)	7.5/4		40/40			–		
Standard attached parts (front connection)				Mounting screw: M4×0.7×55 (2 and 3P: 2pcs, 4P: 4pcs) (*2) Insulation barrier: (2P: 1pc, 3P: 2pcs, 4P: 3pcs)							

Notes *1 Use two poles for three- and four-pole products.
If wired as shown at the bottom of page 672, three and four poles can be used for up to 400 and 500VDC, respectively.
*2 Supplied with NF125-SV and NF125-HV.

Operating Characteristics

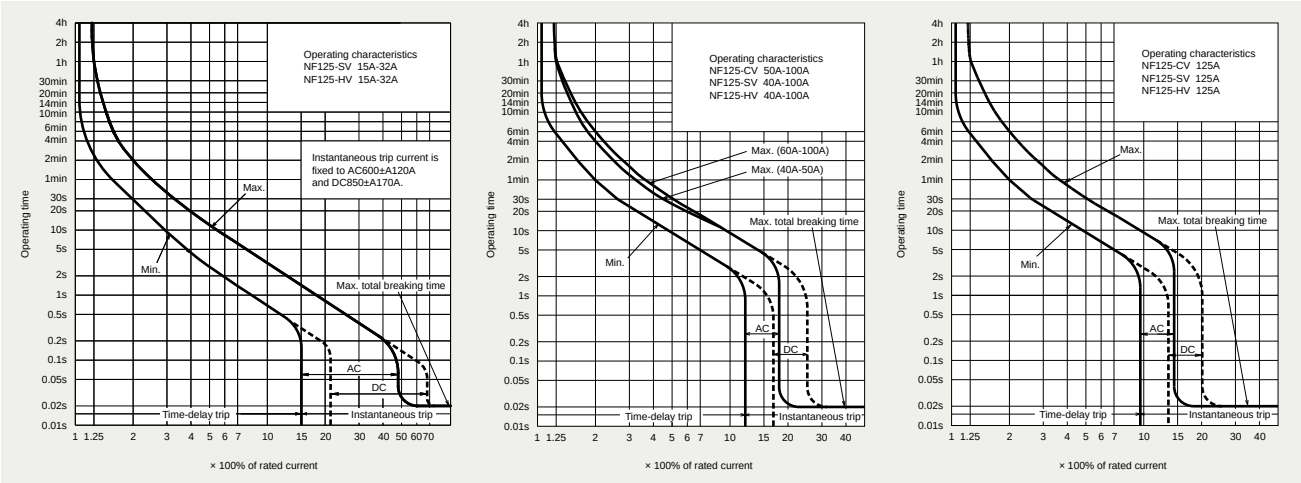

Internal Accessories

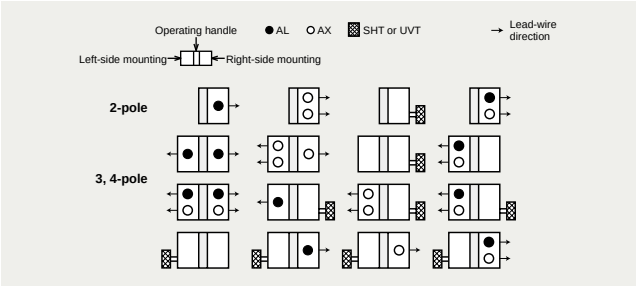

Temperature Compensation Curve

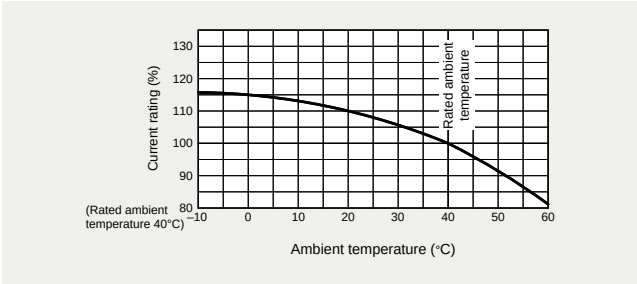

External Accessories

Accessories			Type name
Operating handle	F	2P	F-1SV2
		3, 4P	F-1SV
	V	2P	V-1SV2
		3, 4P	V-1SV
Handle lock device	LC		LC-05SV
	HL (*1)		HLF-05SV
			HLN-05SV
	HL-S		HLS-05SV

Notes *1 HLF types are used for OFF lock and HLN types for ON lock.
*2 Specify the working voltage.

Accessories				Type name
Mechanical interlock		MI	2, 3P	MI-05SV3
			4P	MI-05SV4
Terminal cover	Small	TC-S	2P	TCS-1SV2
			3P	TCS-1SV3
	Large	TC-L	2P	TCL-1SV2
			3P	TCL-1SV3
			4P	TCL-1SV4
	Skeleton	TTC	2P	TTC-1SV2
			3P	TTC-1SV3
	Rear	BTC	2P	BTC-1SV2
			3P	BTC-1SV3
	Plug-in	PTC	2P	PTC-1SV2
			3P	PTC-1SV3
Electrical operation device				(*2)

Outline Drawing

Front connection

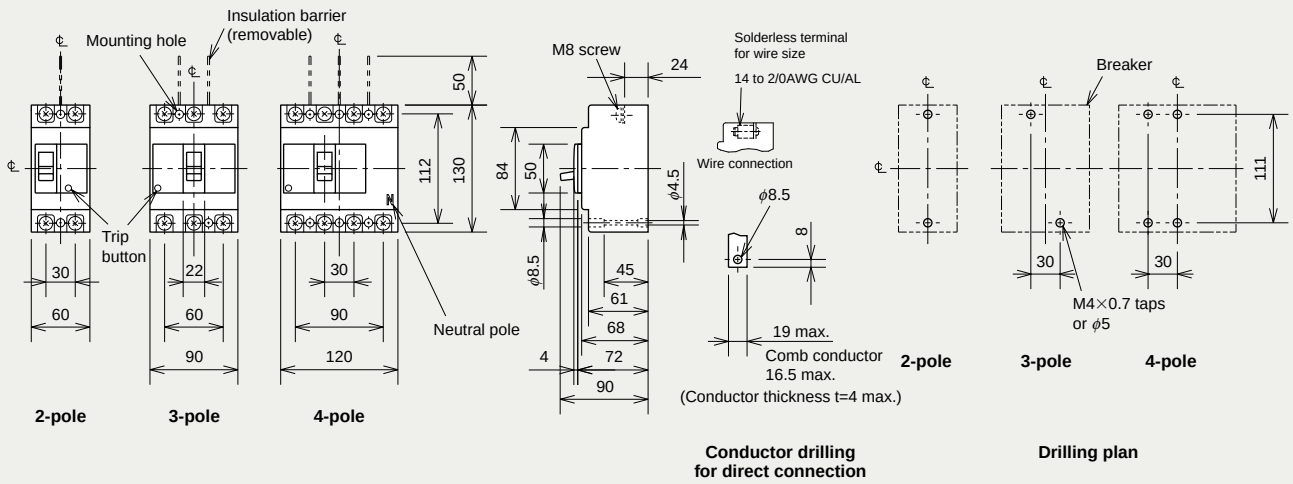

Rear connection

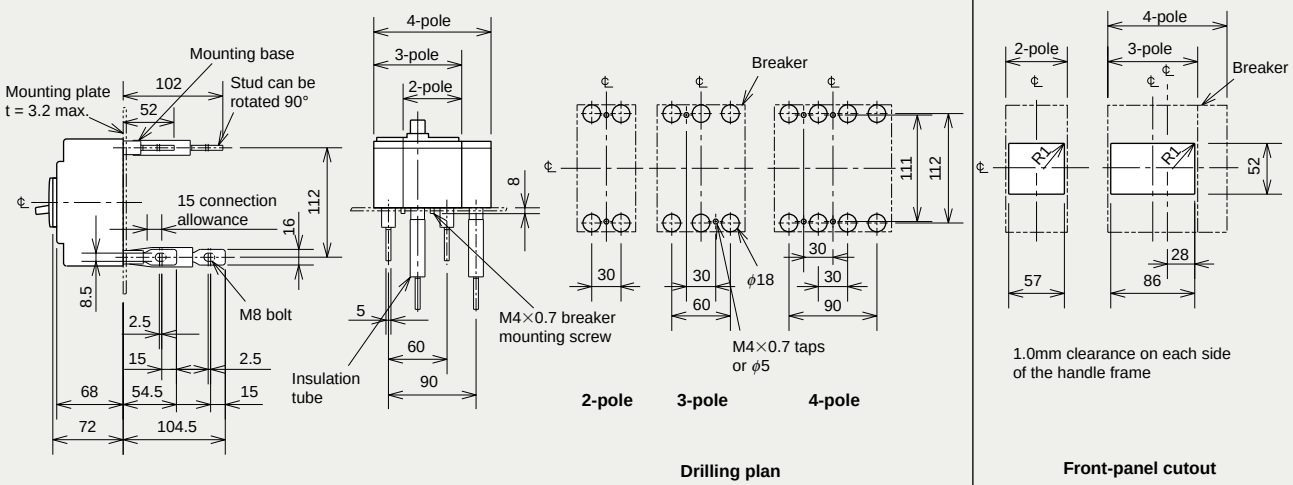

Plug-in

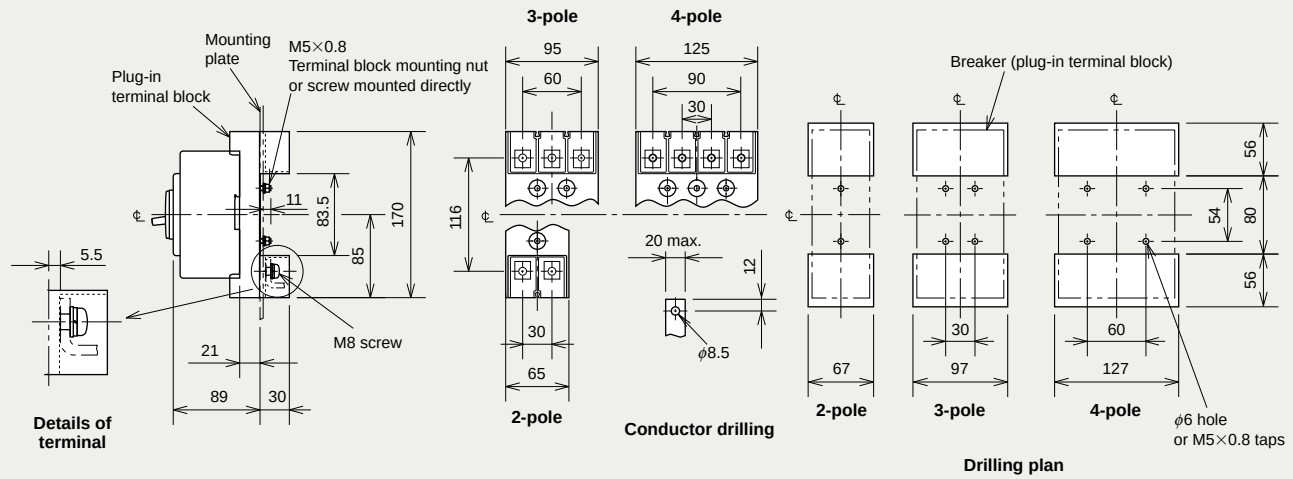

Remarks: 1. The 2-pole models of NF125-HV are 3-pole models with the central pole removed.
2. Only 2-and 3-pole models are available for NF125-CV.

NF125-UV

NF125-UV

Model				NF125-UV		
Rated current In (A)				15 20 30 40 50 60 75 100 125		
Number of poles				2	3	4
Rated insulation voltage Ui (V)				690		
Rated short-circuit breaking capacity (kA)	IEC 60947-2 (Icu/Ics)	AC	690V	10/10		
			500V	200/200		
			440V	200/200		
			415V	200/200		
			400V	200/200		
			380V	200/200		
			230V	200/200		
		DC	250V	–		
Standard attached parts (front connection)				Mounting screw: M4×0.7×55 (2 and 3P: 2pcs, 4P: 4pcs) M4×0.7×73 (2 and 3P: 2pcs)		

Operating Characteristics

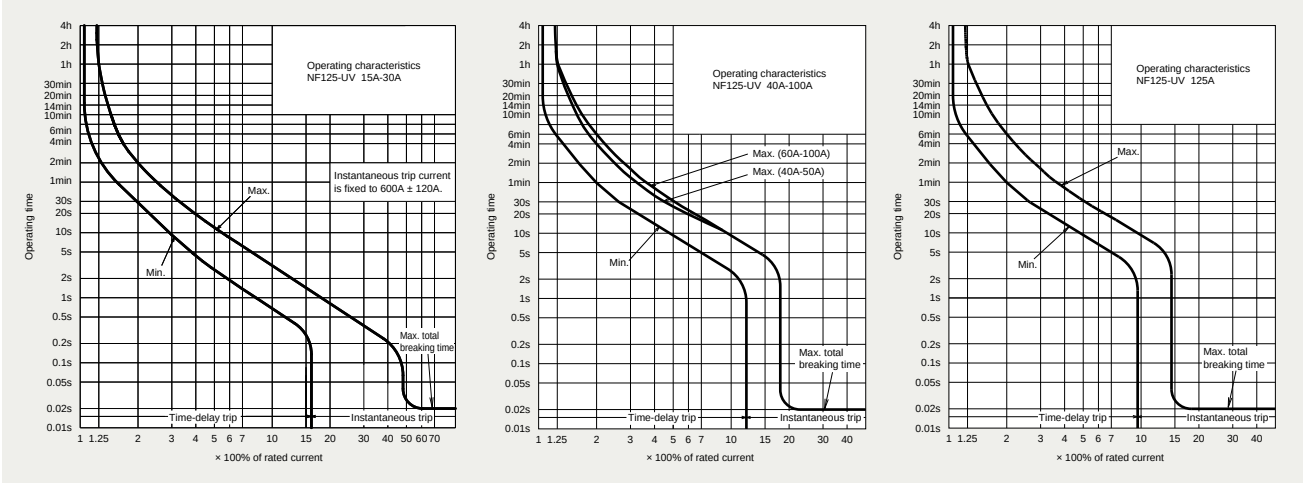

Internal Accessories

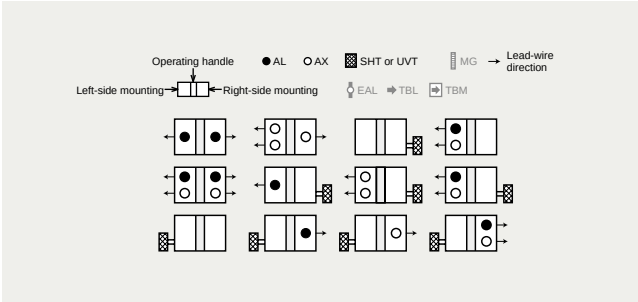

Temperature Compensation Curve

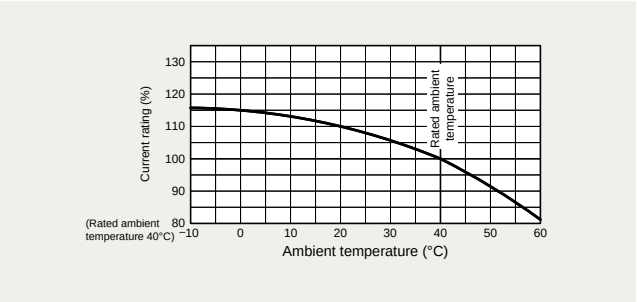

External Accessories

Accessories		Type name
Operating handle	F	F-1UV
	V	V-1UV
Lock cover	LC	LC-05SV
Handle lock device	HL (*1)	HLF-05SV
		HLN-05SV
	HL-S	HLS-05SV

Accessories				Type name
Mechanical interlock		MI	2, 3P	MI-05SV3
			4P	MI-05SV4
Terminal cover	Small	TC-S	3P	TCS-1SV3
	Large	TC-L	3P	TCL-1SV3
			4P	TCL-1SV4
	Skeleton	TTC	3P	TTC-1SV3
	Rear	BTC	3P	BTC-1SV3
	Plug-in	PTC	3P	PTC-1SV3
Electrical operation device				(*2)

Notes *1 HLF types are used for OFF lock and HLN types for ON lock.
*2 Specify the working voltage.

Outline Drawing

Front connection

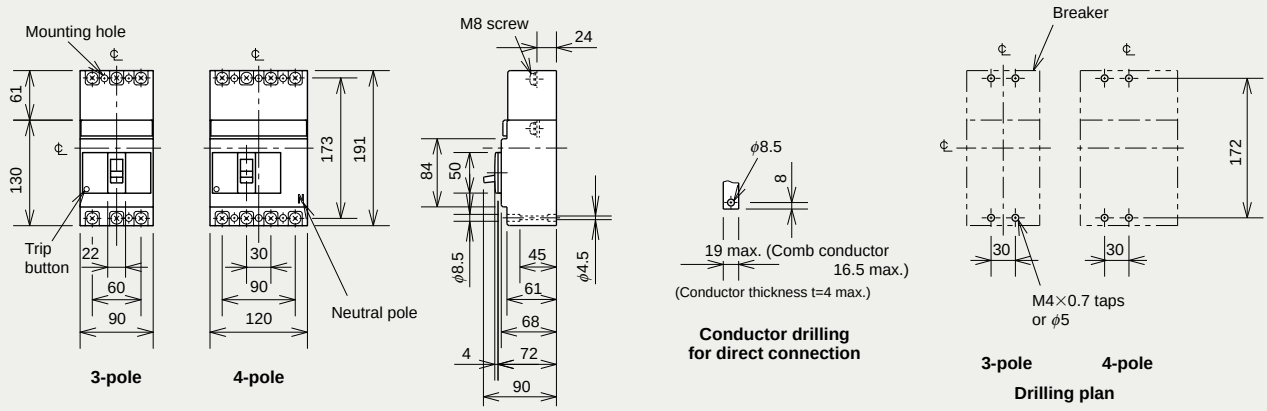

Rear connection

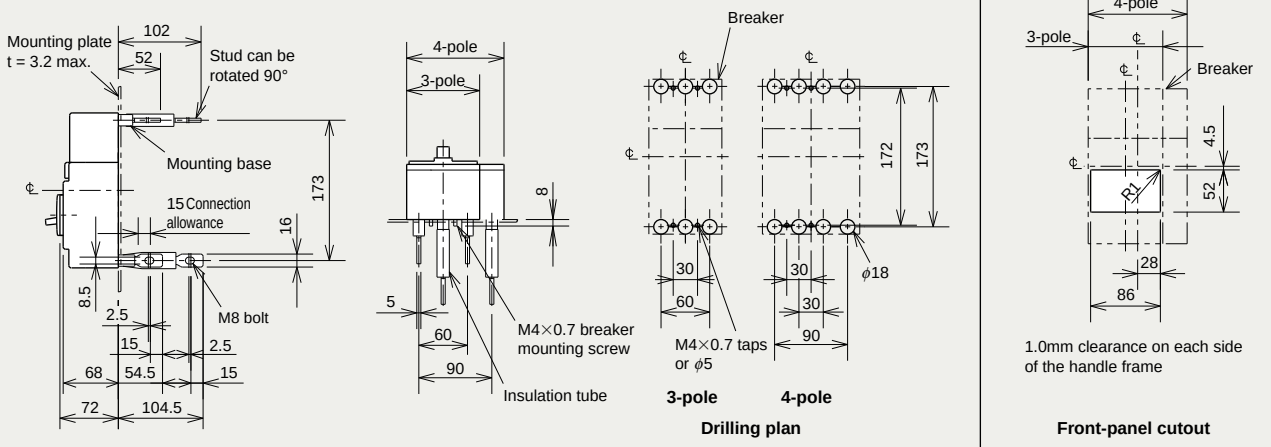

Plug-in

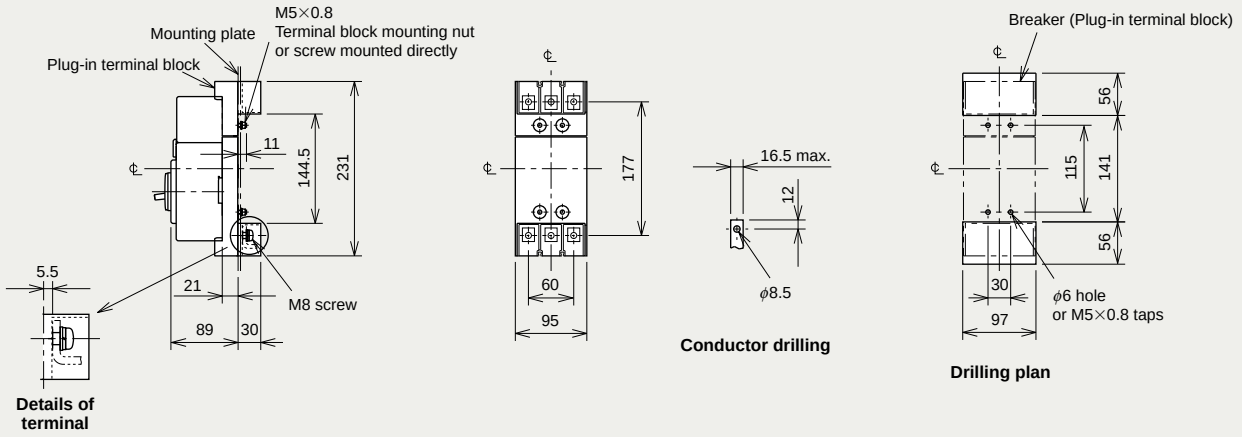

Remark: 1. 2-pole models are 3-pole models with the central pole removed.

NF250-CV NF250-SV NF250-HV

NF250-SV

Model				NF250-CV		NF250-SV			NF250-HV		
Rated current In (A)				(*1) (100) 125 150 175 200 225 250		(*1) (100) 125 150 160 175 200 225 250			125 150 160 175 200 225 250		
Number of poles				2	3	2	3	4	2	3	4
Rated insulation voltage Ui (V)				600		690			690		
Rated short-circuit breaking capacity (kA)	IEC 60947-2 (Icu/Ics)	AC	690V	–		8/8			10/8		
			500V	10/8		30/30			50/38		
			440V	15/12		36/36			65/65		
			415V	25/19		36/36			70/70		
			400V	25/19		36/36			75/75		
			380V	25/19		36/36			75/75		
			230V	36/27		85/85			100/100		
		DC (*1)	250V	15/12		20/20 (300V)			40/40 (300V)		
Standard attached parts (front connection)				Mounting screw: M4×0.7×55 (2 and 3P: 2pcs, 4P: 4pcs) Insulation barrier: (2P: 2pcs, 3P: 4pcs, 4P: 6pcs)							

Note *1 Use two poles for three- and four-pole products. In this case, do not use the neutral pole of the four-pole products. If wired as shown at the bottom of page 672, three-pole NF250-CV can be used for up to 400VDC, three-pole NF250-SV and NF250-HV up to 500VDC and four-pole products up to 600VDC.

Operating Characteristics

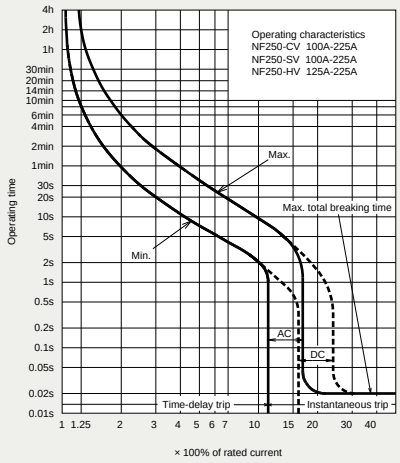

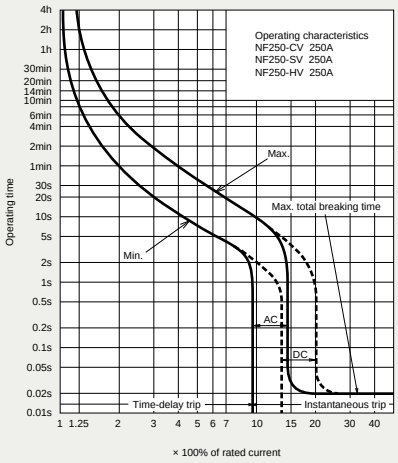

Internal Accessories

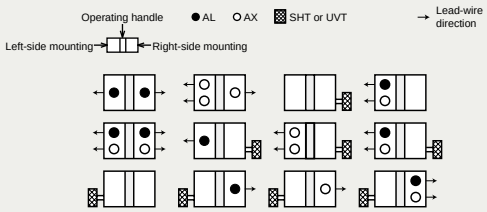

Temperature Compensation Curve

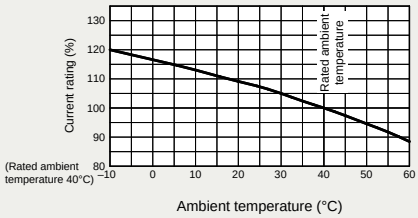

External Accessories

Accessories		Type name
Operating handle	F	F-2SV
	V	V-2SV
Handle lock device	LC	LC-05SV
	HL (*1)	HLF-05SV
		HLN-05SV
	HL-S	HLS-2SV

Accessories				Type name
Mechanical interlock		MI	2, 3P	MI-05SV3
			4P	MI-2SV4
Terminal cover	Small	TC-S	2, 3P	TCS-2SV3
	Large	TC-L	2, 3P	TCL-2SV3
				TCL-2SV3L
			4P	TCL-2SV4
	Skeleton	TTC	2, 3P	TTC-2SV3
	Rear	BTC	2, 3P	BTC-2SV3
	Plug-in	PTC	2, 3P	PTC-2SV3
Electrical operation device				(*2)

Notes *1 HLF types are used for OFF lock and HLN types for ON lock.
*2 Specify the working voltage.

Outline Drawing

Front connection

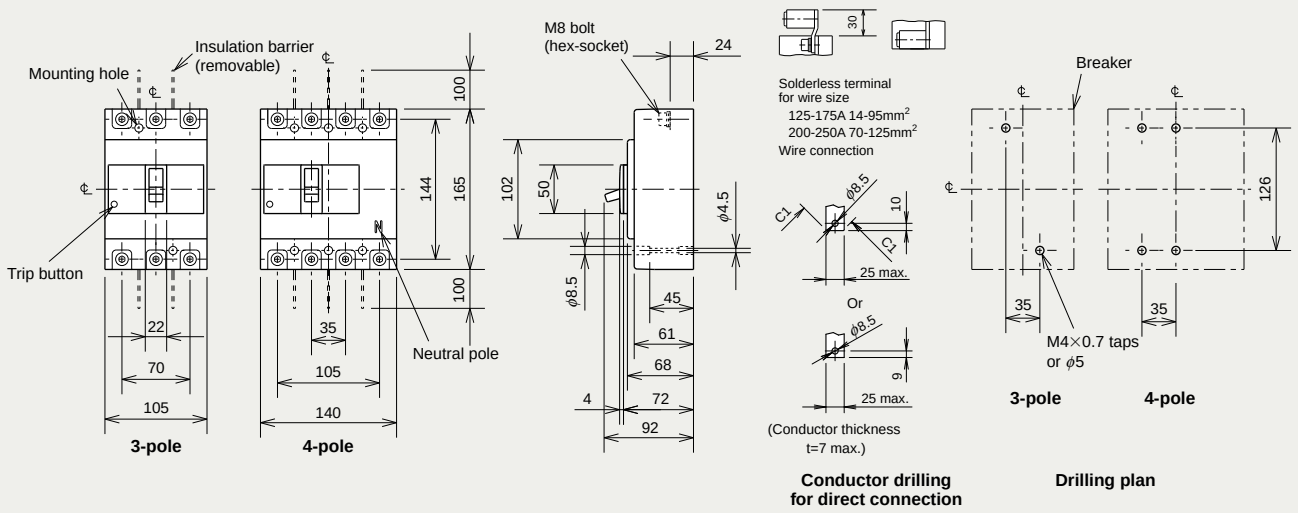

Rear connection

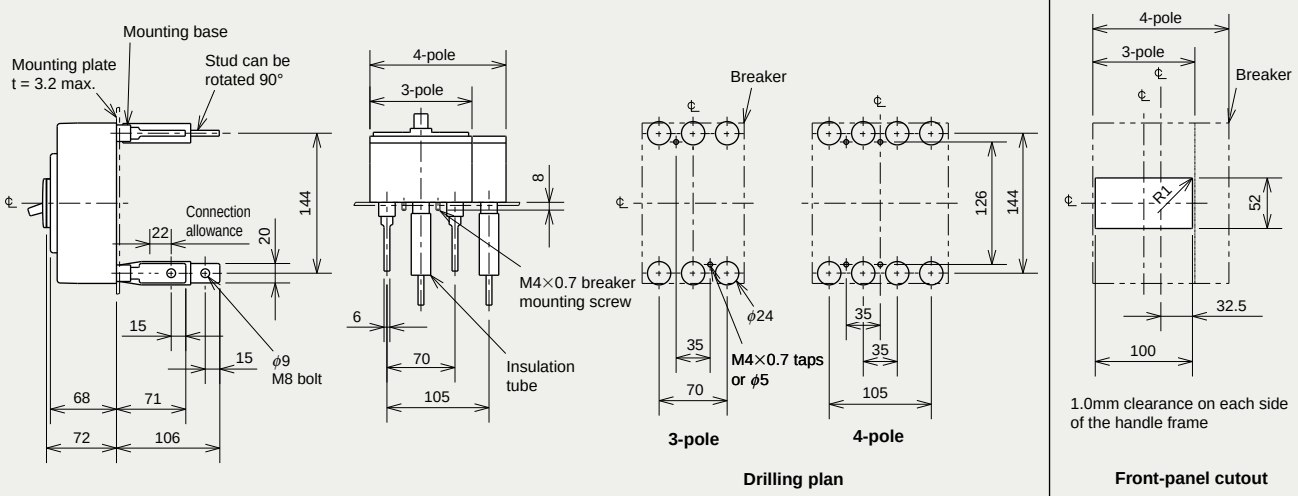

Plug-in

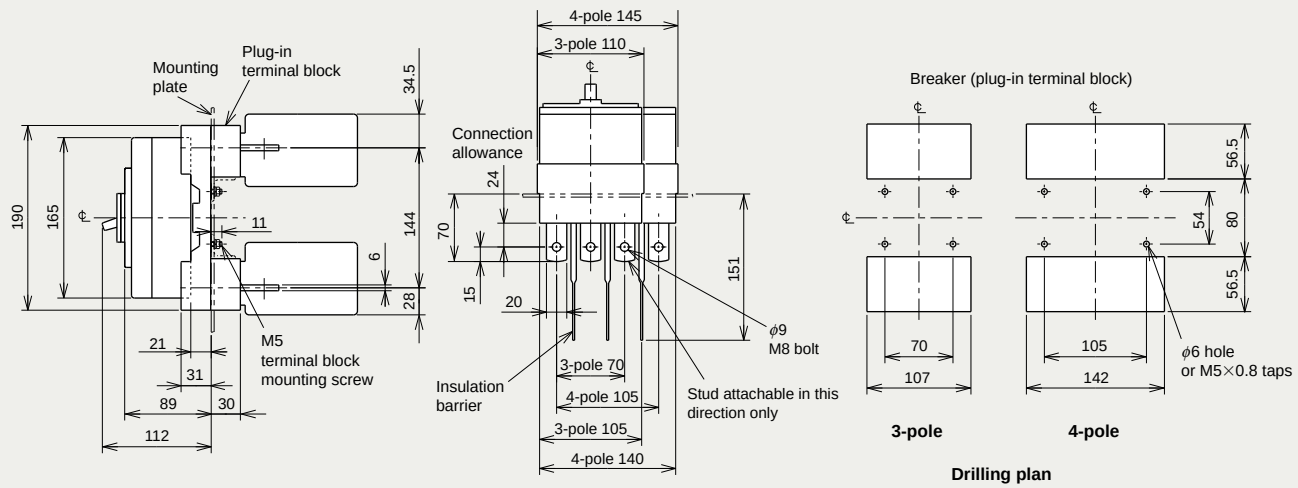

Remarks: 1. 2-pole models are 3-pole models with the central pole removed.
2. Only 2-pole and 3-pole models are available for NF250-CV.

NF250-UV

NF250-UV

Model				NF250-UV		
Rated current In (A)				125 150 175 200 225 250		
Number of poles				2	3	4
Rated insulation voltage Ui (V)				690		
Rated short-circuit breaking capacity (kA)	IEC 60947-2 (Icu/Ics)	AC	690V	15/15		
			500V	200/200		
			440V	200/200		
			415V	200/200		
			400V	200/200		
			380V	200/200		
			230V	200/200		
		DC	250V	–		
Standard attached parts (front connection)				Mounting screw: M4×0.7×55 (2 and 3P: 2pcs, 4P: 4pcs) Mounting screw: M4×0.7×73 (2 and 3P: 2pcs) Insulation barrier: (2P: 2pcs, 3P: 4pcs, 4P: 6pcs)		

Operating Characteristics

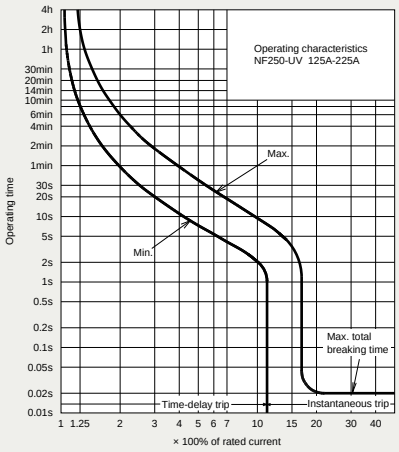

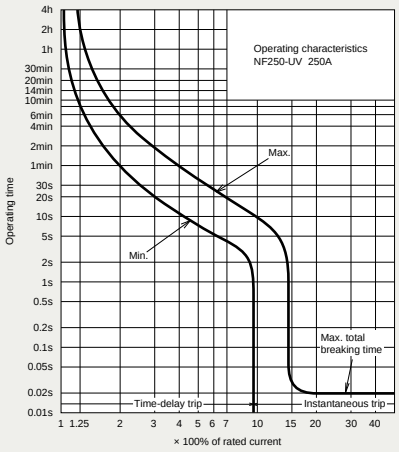

Internal Accessories

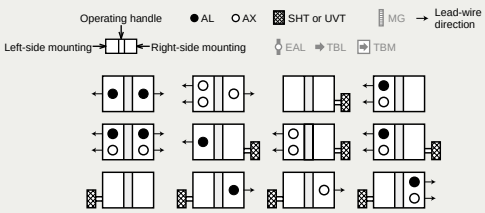

Temperature Compensation Curve

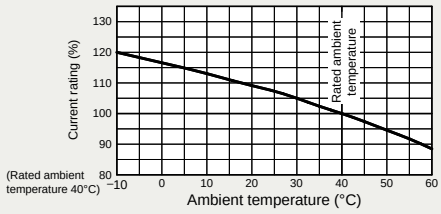

External Accessories

Accessories		Type name
Operating handle	F	F-2UV
	V	V-2UV
Handle lock device	LC	LC-05SV
	HL (*1)	HLF-05SV
		HLN-05SV
	HL-S	HLS-2SV

Notes *1 HLF types are used for OFF lock and HLN types for ON lock.
*2 Specify the working voltage.

Accessories				Type name
Mechanical interlock		MI	2, 3P	MI-05SV3
			4P	MI-2SV4
Terminal cover	Small	TC-S	2, 3P	TCS-2SV3
	Large	TC-L	2, 3P	TCL-2SV3
				TCL-2SV3L
			4P	TCL-2SV4
	Skeleton	TTC	2, 3P	TTC-2SV3
	Rear	BTC	2, 3P	BTC-2SV3
	Plug-in	PTC	2, 3P	PTC-2SV3
Electrical operation device				(*2)

Outline Drawing

Front connection

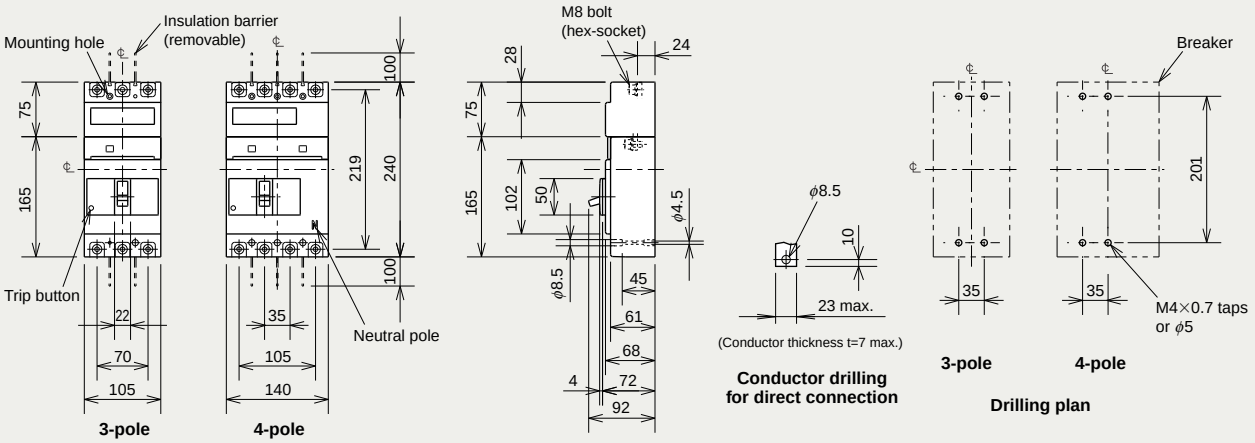

Rear connection

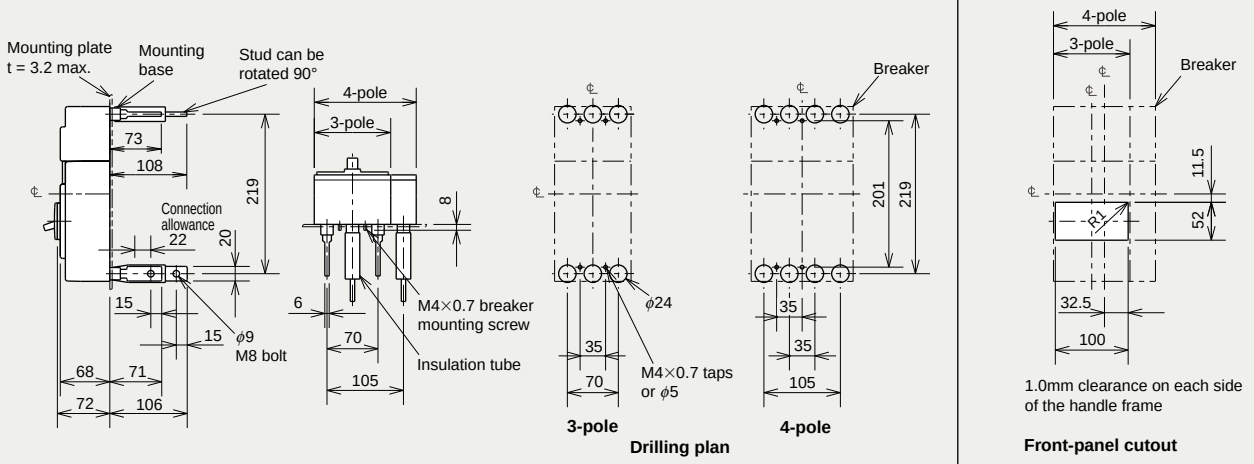

Plug-in

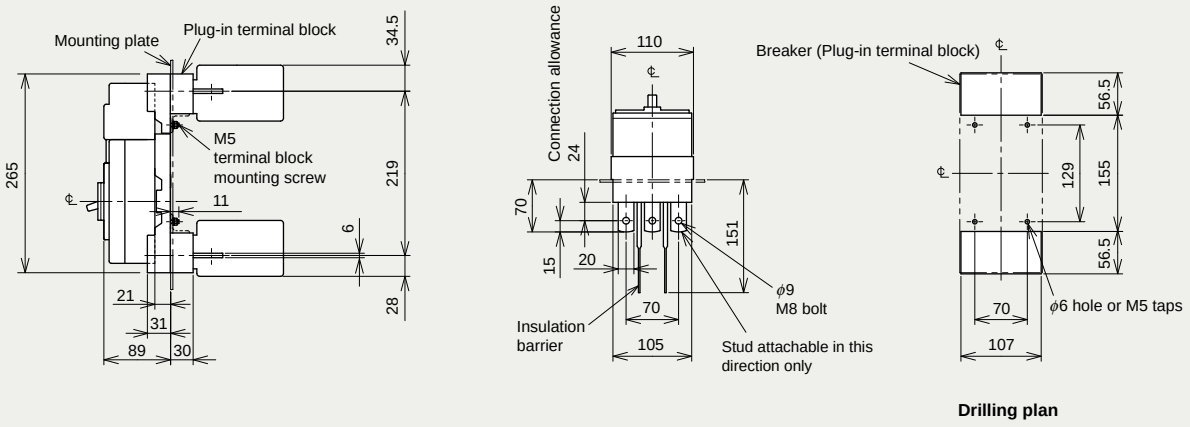

Remark: 1. 2-pole models are 3-pole models with the central pole removed.

NF125-SGV NF160-SGV NF250-SGV NF125-LGV NF160-LGV NF250-LGV NF125-HGV NF160-HGV NF250-HGV NF125-RGV NF250-RGV

NF250-SGV

Model				NF125-SGV			NF160-SGV			NF250-SGV			NF125-LGV			NF160-LGV			NF250-LGV		
Rated current In (A)				16-20, 20-25, 25-32 32-40, 35-50, 45-63 56-80, 70-100, 90-125			125-160			125-160 140-200 175-250			16-20, 20-25, 25-32 32-40, 35-50, 45-63 56-80, 70-100, 90-125			125-160			125-160 140-200 175-250		
Number of poles				2	3	4	2	3	4	2	3	4	2	3	4	2	3	4	2	3	4
Rated insulation voltage Ui (V)				690			690			690			690			690			690		
Rated short-circuit breaking capacity (kA)	IEC 60947-2 (Icu/Ics)	AC	690V	8/8			8/8			8/8			8/8			8/8			8/8		
			500V	30/30			30/30			30/30			36/36			36/36			36/36		
			440V	36/36			36/36			36/36			50/50			50/50			50/50		
			415V	36/36			36/36			36/36			50/50			50/50			50/50		
			400V	36/36			36/36			36/36			50/50			50/50			50/50		
			380V	36/36			36/36			36/36			50/50			50/50			50/50		
			230V	85/85			85/85			85/85			90/90			90/90			90/90		
			200V	85/85			85/85			85/85			90/90			90/90			90/90		
		DC (*1)	300V	20/20			20/20			20/20			20/20			20/20			20/20		
Standard attached parts (front connection)				Mounting screw: M4×0.7×55 (2 and 3P: 2pcs, 4P: 4pcs) Insulation barrier: (2P: 2pcs, 3P: 4pcs, 4P: 6pcs)																	

Model				NF125-HGV			NF160-HGV			NF250-HGV			NF125-RGV		NF250-RGV	
Rated current In (A)				16-20, 20-25, 25-32 32-40, 35-50, 45-63 56-80, 70-100, 90-125			125-160			125-160 140-200 175-250			16-20, 20-25, 25-32 32-40, 40-50, 50-63 63-80, 80-100, 100-125		125-160 160-200 200-250	
Number of poles				2	3	4	2	3	4	2	3	4	2	3	2	3
Rated insulation voltage Ui (V)				690			690			690			690		690	
Rated short-circuit breaking capacity (kA)	IEC 60947-2 (Icu/Ics)	AC	690V	10/8			10/8			10/8			–		–	
			500V	50/38			50/38			50/38			–		–	
			440V	65/65			65/65			65/65			125/125		125/125	
			415V	70/70			70/70			70/70			150/150		150/150	
			400V	75/75			75/75			75/75			150/150		150/150	
			380V	75/75			75/75			75/75			150/150		150/150	
			230V	100/100			100/100			100/100			150/150		150/150	
			200V	100/100			100/100			100/100			150/150		150/150	
		DC (*1)	300V	40/40			40/40			40/40			–		–	
Standard attached parts (front connection)				Mounting screw: M4×0.7×55 (2 and 3P: 2pcs, 4P: 4pcs) Insulation barrier: (2P: 2pcs, 3P: 4pcs, 4P: 6pcs)												

Note *1 When wired as shown at the bottom of page 672, three-pole models can be used for up to 500VDC, and four-pole models for up to 600VDC.

Operating Characteristics

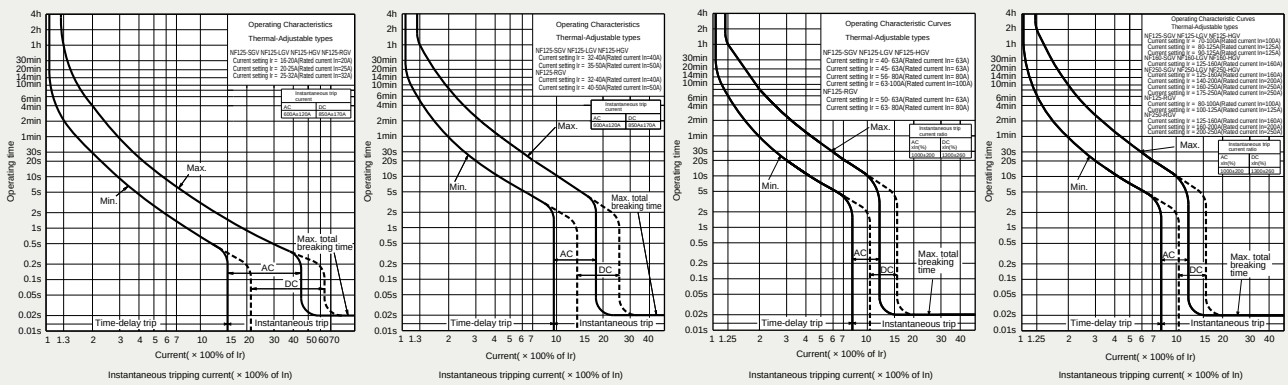

Internal Accessories

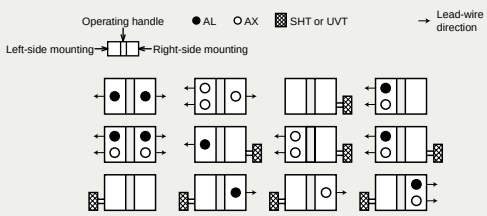

Temperature Compensation Curve

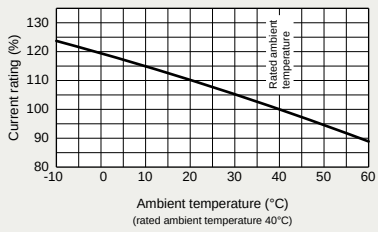

External Accessories

Accessories		Type name
Operating handle	F	F-2SV
	V	V-2SV
Handle lock device	LC	LC-05SV
	HL (*1)	HLF-05SV
		HLN-05SV
	HL-S	HLS-2SV

Accessories				Type name
Mechanical interlock		MI	2, 3P	MI-05SV3
			4P	MI-2SV4
Terminal cover	Small	TC-S	2, 3P	TCS-2SV3
	Large	TC-L	2, 3P	TCL-2SV3
				TCL-2SV3L
			4P	TCL-2SV4
	Skeleton	TTC	2, 3P	TTC-2SV3
	Rear	BTC	2, 3P	BTC-2SV3
	Plug-in	PTC	2, 3P	PTC-2SV3
Electrical operation device				(*2)

Notes *1 HLF types are used for OFF lock and HLN types for ON lock.
*2 Specify the working voltage.

Outline Drawing

Front connection

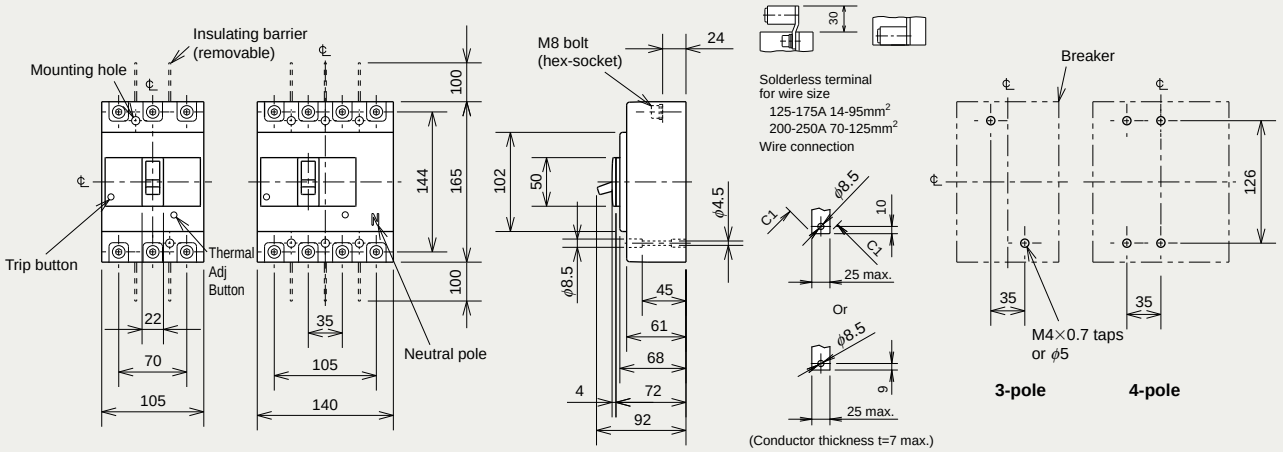

Rear connection

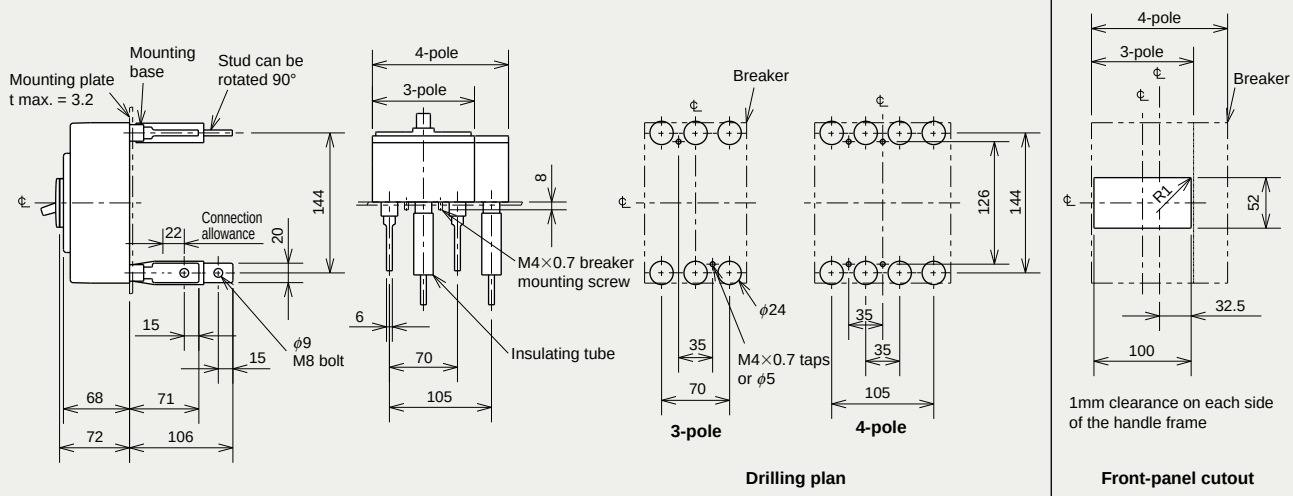

Plug-in

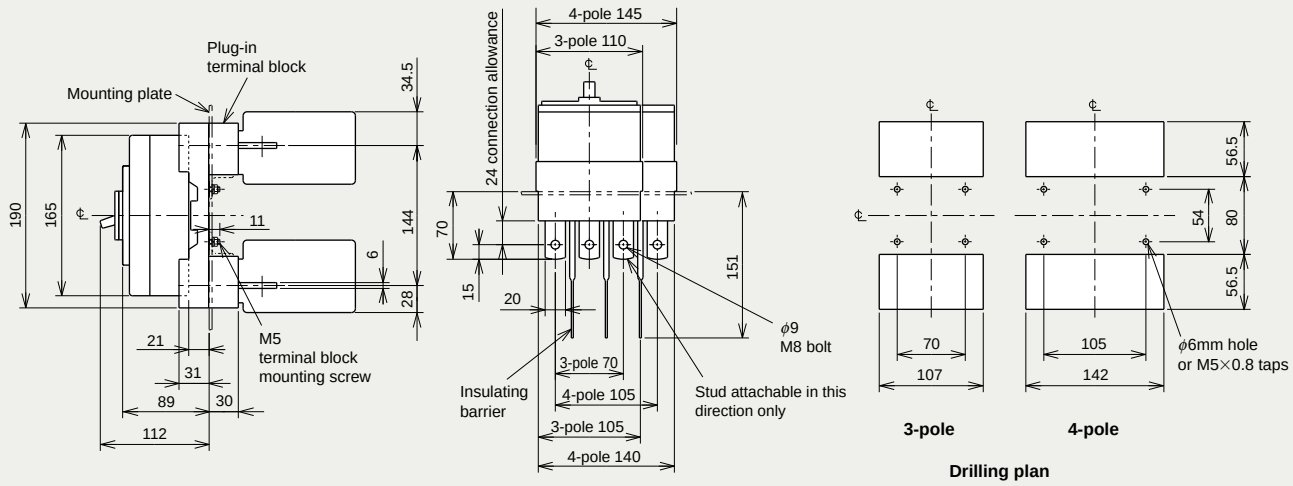

Remark: 1. 2-pole models are 3-pole models with the central pole removed.

NF125-SEV NF125-HEV NF250-SEV NF250-HEV

NF125-SEV

Model				NF125-SEV		NF125-HEV		NF250-SEV		NF250-HEV	
Rated current In (A)				32 63 125		32 63 125		160 250		160 250	
Current setting Ir (A)				16-32 32-63 63-125		16-32 32-63 63-125		80-160 125-250		80-160 125-250	
Number of poles				3	4	3	4	3	4	3	4
Rated insulation voltage Ui (V)				690		690		690		690	
Rated short-circuit breaking capacity (kA)	IEC 60947-2 (Icu/Ics)	AC	690V	8/8		10/8		8/8		10/8	
			500V	30/30		50/38		30/30		50/38	
			440V	36/36		65/65		36/36		65/65	
			415V	36/36		70/70		36/36		70/70	
			400V	36/36		75/75		36/36		75/75	
			380V	36/36		75/75		36/36		75/75	
			230V	85/85		100/100		85/85		100/100	
		DC	250V	–		–		–		–	
Standard attached parts (front connection)				Mounting screw: M4×0.7×55 (3P: 2pcs, 4P: 4pcs) Insulation barrier: (3P: 4pcs, 4P: 6pcs)							

Operating Characteristics

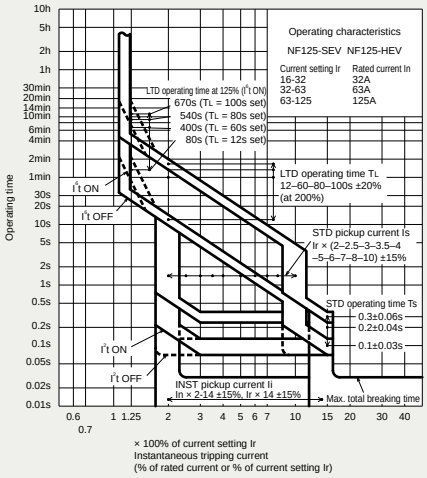

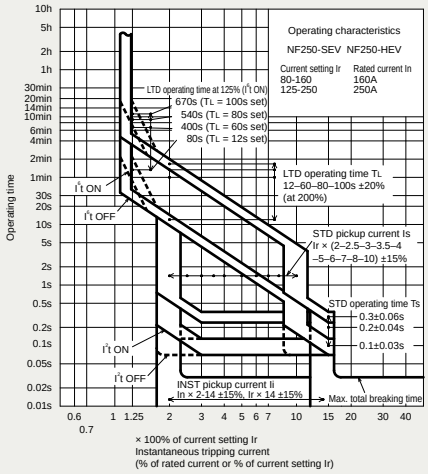

Internal Accessories

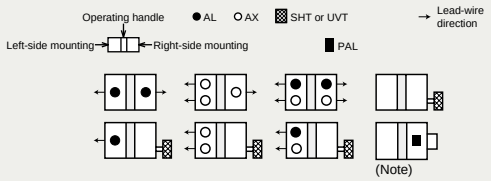

Current Reducing Curve

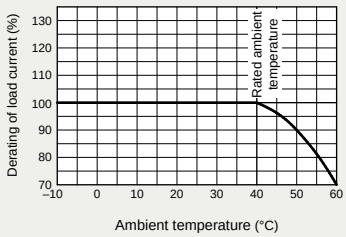

The rated current does not have thermal characteristics. Reduce the current as shown in the curve on the left chart if the ambient temperature exceeds 40 °C.

External Accessories

Accessories		Type name
Operating handle	F	F-2SV
	V	V-2SV
Handle lock device	LC	LC-05SV
	HL (*1)	HLF-05SV
		HLN-05SV
	HL-S	HLS-2SV

Notes *1 HLF types are used for OFF lock and HLN types for ON lock.
*2 Specify the working voltage.

Accessories				Type name
Mechanical interlock		MI	3P	MI-05SV3
			4P	MI-2SV4
Terminal cover	Small	TC-S	3P	TCS-2SV3
	Large	TC-L	3P	TCL-2SV3
				TCL-2SV3L
			4P	TCL-2SV4
	Skeleton	TTC	3P	TTC-2SV3
	Rear	BTC	3P	BTC-2SV3
	Plug-in	PTC	3P	PTC-2SV3
Electrical operation device				(*2)

Outline Drawing

Front connection

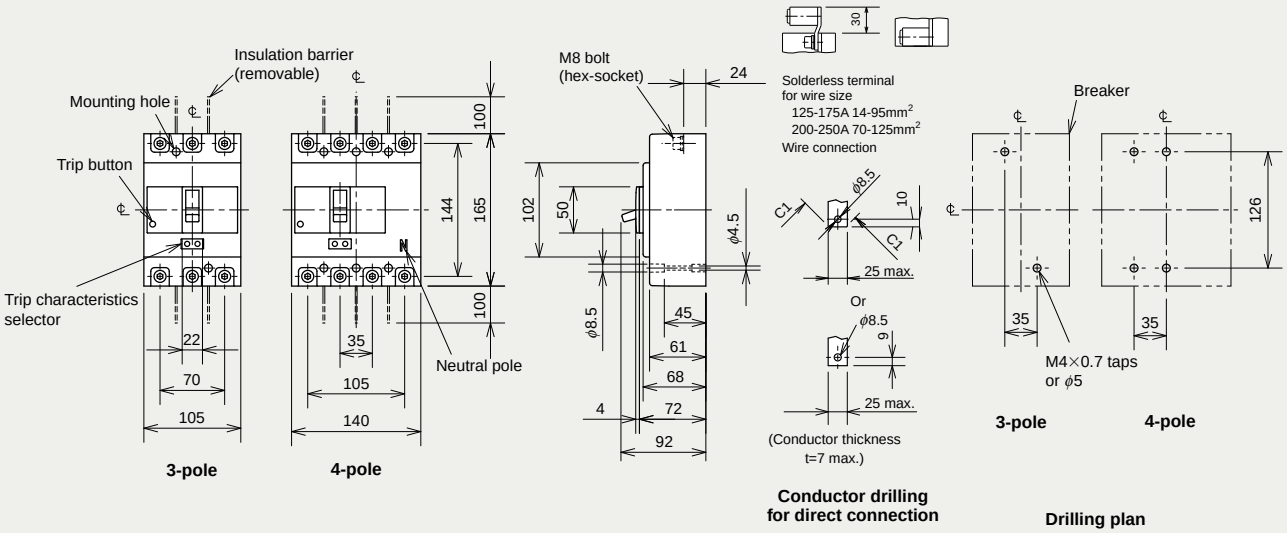

Rear connection

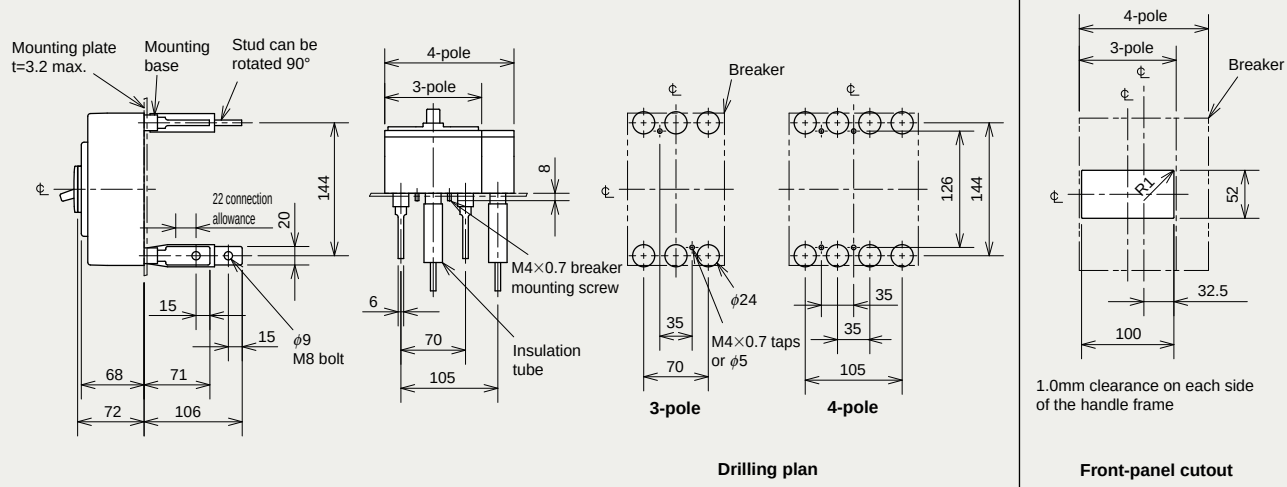

Plug-in

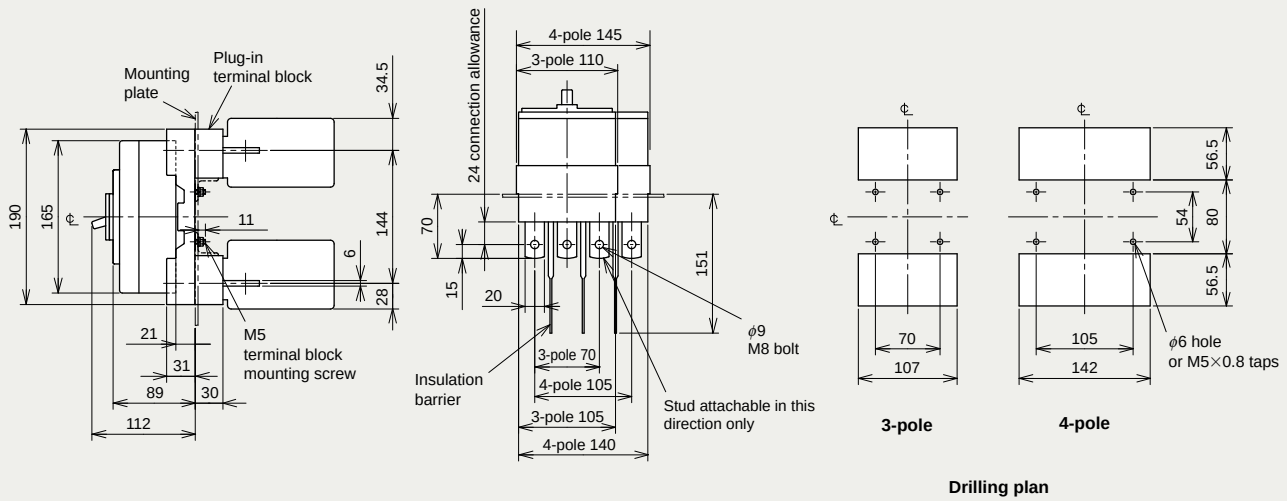

NF400-CW
NF400-SW

NF400-SW

Model				NF400-CW		NF400-SW		
Rated current In (A)				250 300 350 400				
Number of poles				2	3	2	3	4
Rated insulation voltage Ui (V)				690		690		
Rated short-circuit breaking capacity (kA)	IEC 60947-2 (Icu/Ics)	AC	690V	–		10/10		
			500V	15/8		30/30		
			440V	25/13		42/42		
			400V	36/18		45/45		
			230V	50/25		85/85		
		DC (*1)	250V	20/10		40/40		
Standard attached parts			Front connection	Mounting screw: M6×60 (4pcs) Insulating barrier: (2P: 2pcs, 3P: 4pcs, 4P: 6pcs)				
			Rear connection	Mounting screw: M6×72 (4pcs)				

Note *1 When wired as shown at the bottom of page 672, 3-pole models can be used for up to 400VDC, and 4-pole models for up to 500VDC.

Operating Characteristics

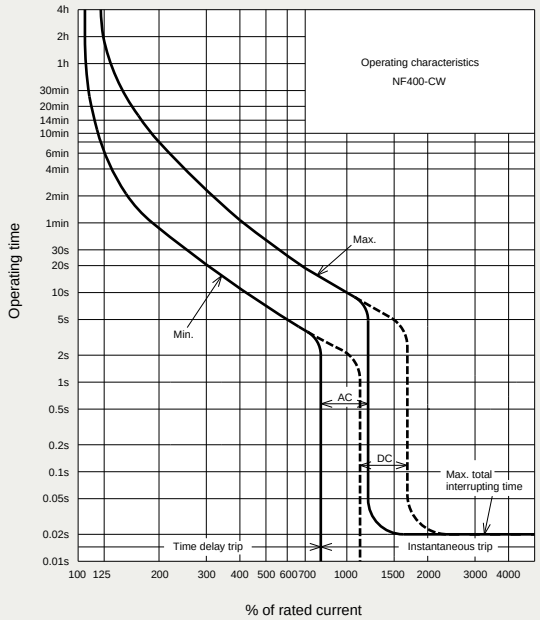

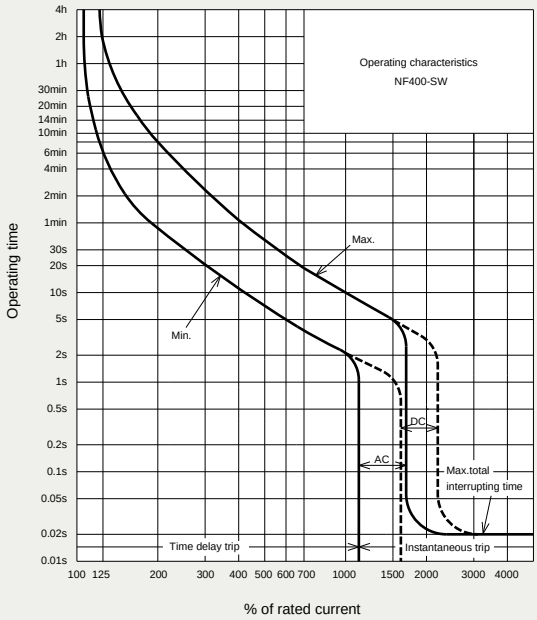

Internal Accessories

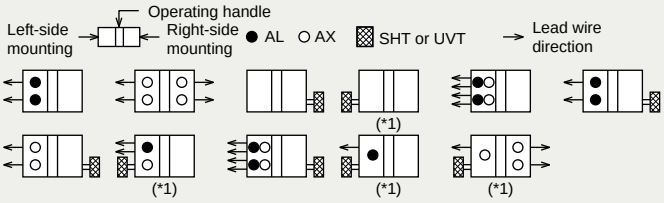

Note *1 Right-side mounting is standard of SHT and UVT. Specify separately for left-side mounting.

Temperature Compensation Curve

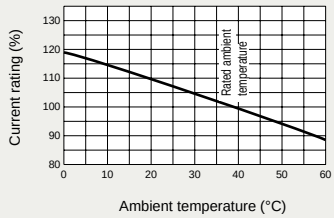

External Accessories

Accessories			Type name
Operating handle	F		F-4S
	V		V-4S
Mechanical interlock	MI	2, 3P	MI-4SW3
		4P	MI-4SW4
Auxiliary handle	HT		HT-4CW, HT-4SW

Note *1 Specify the operation method and voltage. Order in combination with the breaker unit.

Accessories				Type name
Terminal cover	Large	TC-L	2, 3P	TCL-4SW3
			4P	TCL-4SW4
	Skeleton	TTC	2, 3P	TTC-4SW3
			4P	TTC-4SW4
	Rear	BTC	2, 3P	BTC-4SW3
			4P	BTC-4SW4
Handle lock device		HL		HL-4CW, HL-4SW
		HL-S		HLS-4SW
Electrical operation device		NFM	3P	(*1)
			4P	

Outline Drawing

Front connection

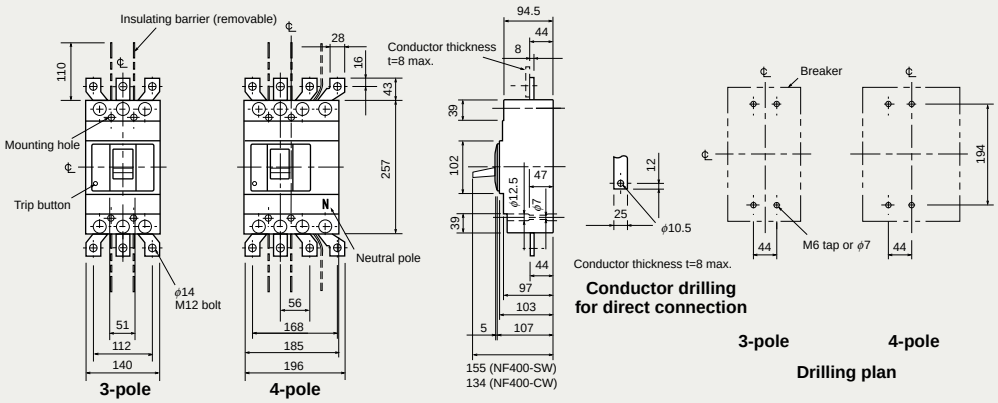

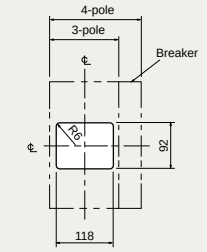

Rear connection

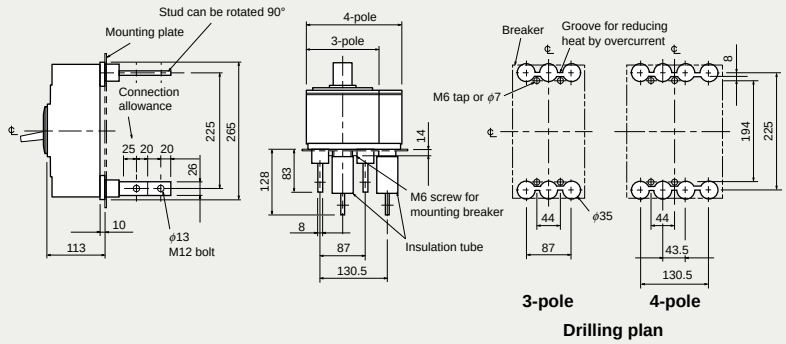

Boring dimensions for rear connection type barriers (3-pole)

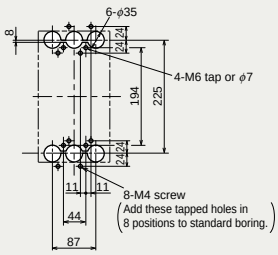

Note The bore dimensional drawing shows the breaker viewed from the rear.

Plug-in

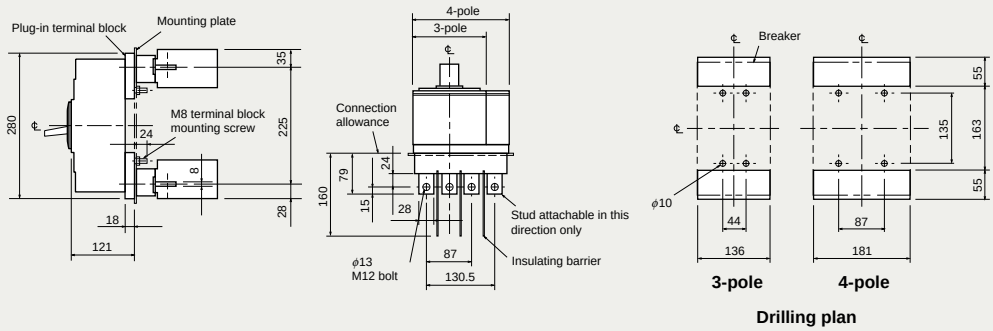

Remark: 1. 2-pole models are 3-pole models with the central pole removed.

NF400-SEW
NF400-HEW
NF400-REW

NF400-SEW

Model				NF400-SEW		NF400-HEW		NF400-REW
Rated current In (A)				200-400 adjustable				
Number of poles				3	4	3	4	3
Rated insulation voltage Ui (V)				690		690		690
Rated short-circuit breaking capacity (kA)	IEC 60947-2 (Icu/Ics)	AC	690V	10/10		35/18		–
			500V	30/30		50/50		70/35
			440V	42/42		65/65		125/63
			400V	50/50		70/70		125/63
			230V	85/85		100/100		150/75
Standard attached parts			Front connection	Mounting screw: M6×72 (4pcs) Insulating barrier: (3P: 4pcs, 4P: 6pcs)				
			Rear connection	Mounting screw: M6×85 (4pcs)				

Operating Characteristics

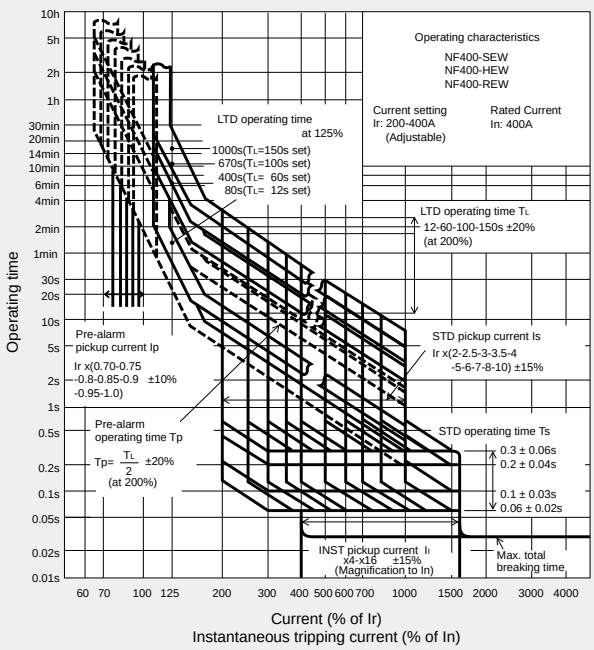

Internal Accessories

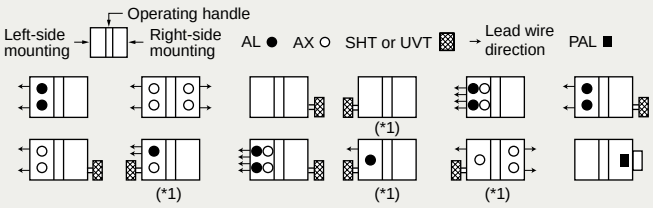

Note *1 Right-side mounting is standard of SHT and UVT. Specify separately for left-side mounting.

Current Reducing Curve

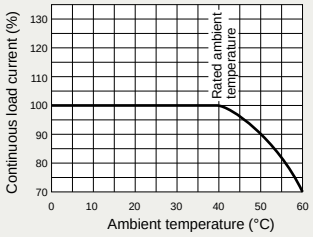

External Accessories

Accessories			Type name
Operating handle	F		F-4S
	V		V-4S
Mechanical interlock	MI	3P	MI-4SW3
		4P	MI-4SW4
Auxiliary handle	HT		HT-4SW

Accessories				Type name
Terminal cover	Large	TC-L	3P	TCL-4SW3 (*2)
			4P	TCL-4SW4 (*3)
	Skeleton	TTC	3P	TTC-4SW3
			4P	TTC-4SW4
	Rear	BTC	3P	BTC-4SW3 (*2)
			4P	BTC-4SW4 (*3)
Handle lock device		HL		HL-4SW
		HL-S		HLS-4SW
Electrical operation device		NFM	3P	(*1)
			4P	

Notes *1 Specify the operation method and voltage. Order in combination with the breaker unit.
*2 This is for NF400-SEW. For rear terminal cover of NF400-HEW/REW, use PTC-4SW3.
*3 This is for NF400-SEW/HEW.

Outline Drawing

Front connection

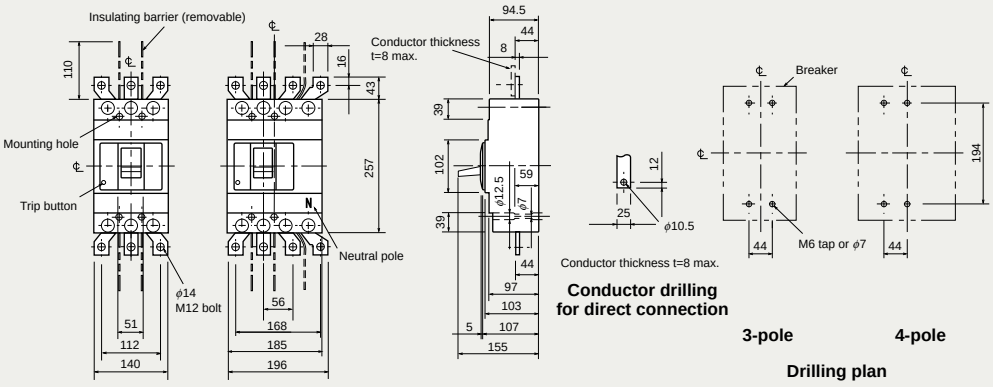

3-pole 4-pole

Conductor drilling for direct connection

3-pole 4-pole

Drilling plan

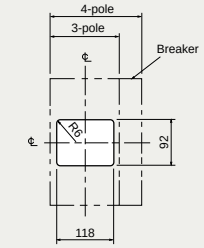

1.0mm clearance on each side of the handle frame.

Front-panel cutout

Rear connection

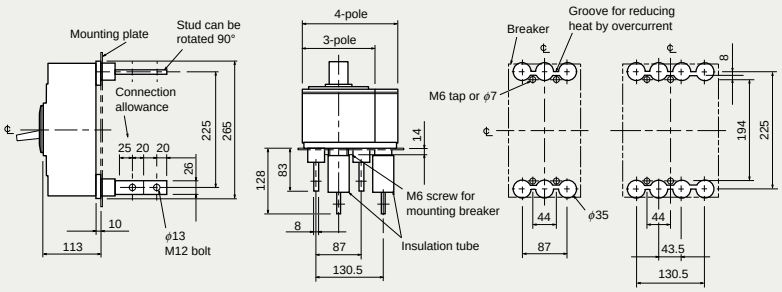

3-pole 4-pole

Drilling plan

Boring dimensions for rear connection type barriers (3-pole)

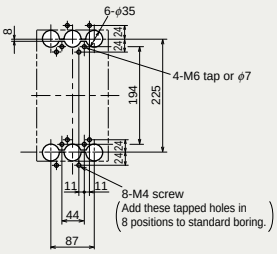

Note The bore dimensional drawing shows the breaker viewed from the rear.

Plug-in

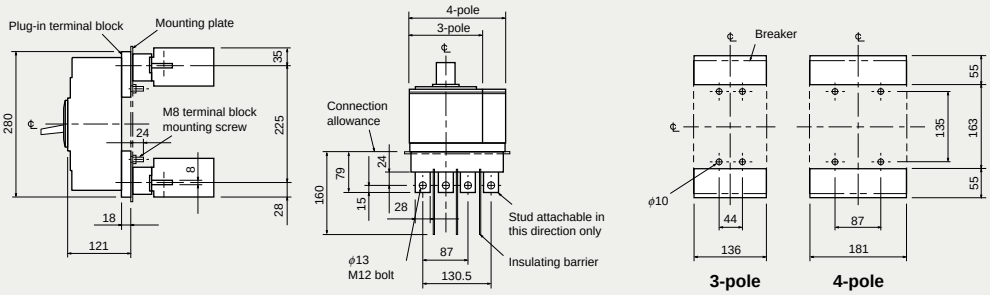

3-pole 4-pole

Drilling plan

NF400-UEW

NF400-UEW

Model				NF400-UEW	
Rated current In (A)				200-400 adjustable	
Number of poles				3	4
Rated insulation voltage Ui (V)				690	
Rated short-circuit breaking capacity (kA)	IEC 60947-2 (Icu/Ics)	AC	690V	–	
			500V	170/170	
			440V	200/200	
			400V	200/200	
			230V	200/200	
Standard attached parts (4-pole models are provided with auxiliary handle.)			Front connection	Mounting screw: M6×65 (2pcs), M6×174 (2pcs) Insulating barrier: (3P: 4pcs)	
			Rear connection	Mounting screw: M6×72 (2pcs), M6×181 (2pcs)	

Operating Characteristics

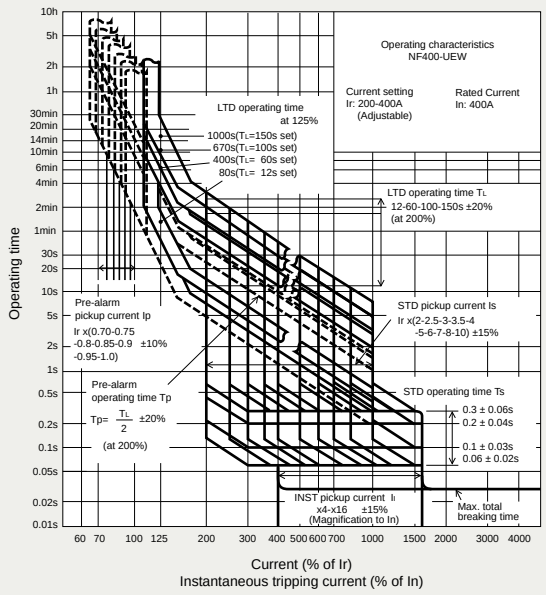

Internal Accessories

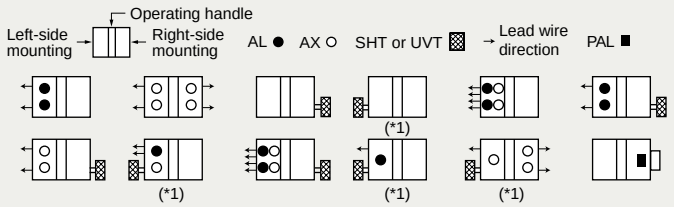

Note *1 Right-side mounting is standard of SHT and UVT. Specify separately for left-side mounting.
Remarks: 1. Specification of 4-pole model is same as that of NF800-UEW.

Current Reducing Curve

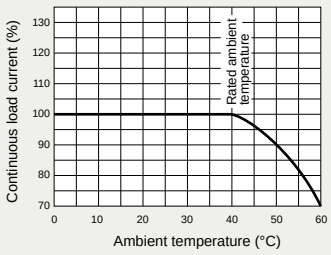

External Accessories

Accessories		Type name
Operating handle	F	F-4U
	V	V-4U
Mechanical interlock	MI	MI-4SW3
Auxiliary handle	HT	HT-4SW

Accessories				Type name
Terminal cover	Large	TC-L	3P	TCL-4SW3
	Skeleton	TTC	3P	–
	Rear	BTC	3P	BTC-4SW3
Handle lock device		HL		HL-4SW
		HL-S		HLS-4UW
Electrical operation device				(*1)

Note *1 Specify the operation method and voltage. Order in combination with the breaker unit.
Remark *1 Specification of 4-pole model is same as that of NF800-UEW.

Outline Drawing

Front connection

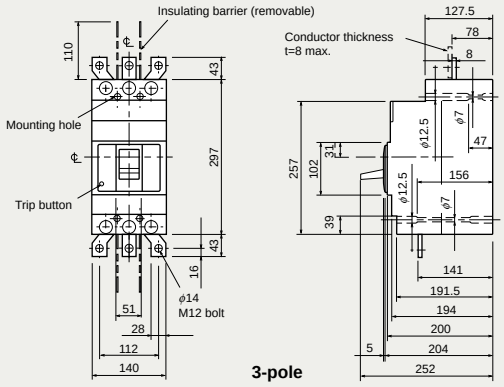

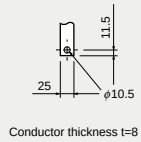

Conductor drilling for direct connection

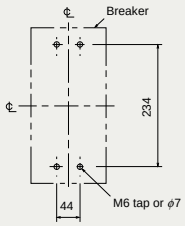

3-pole

Drilling plan

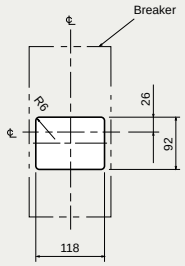

1.0mm clearance on each side of the handle frame.

Front-panel cutout

Rear connection

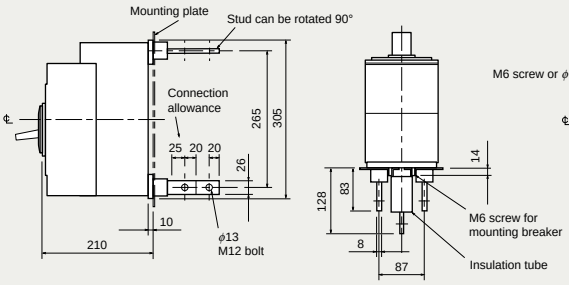

3-pole

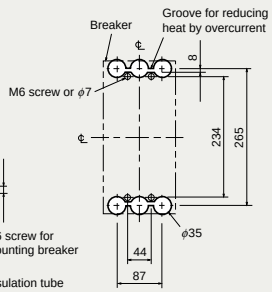

Drilling plan

Boring dimensions for rear connection type barriers (3-pole)

Line side

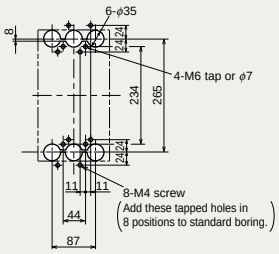

Load side

Note The bore dimensional drawing shows the breaker viewed from the rear.

Plug-in

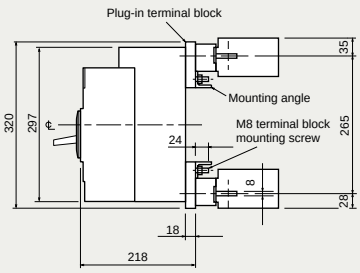

3-pole

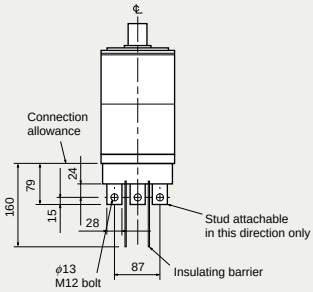

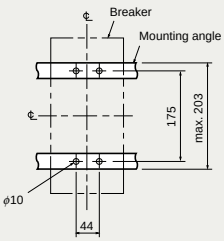

3-pole

Drilling plan

NF630-CW
NF630-SW

NF630-SW

Model				NF630-CW		NF630-SW		
Rated current In (A)				500 600 630				
Number of poles				2	3	2	3	4
Rated insulation voltage Ui (V)				690		690		
Rated short-circuit breaking capacity (kA)	IEC 60947-2 (Icu/Ics)	AC	690V	–		10/10		
			500V	18/9		30/30		
			440V	36/18		42/42		
			400V	36/18		50/50		
			230V	50/25		85/85		
		DC (*1)	250V	20/10		40/40		
Standard attached parts			Front connection	Mounting screw: M6×72 (4pcs) Insulating barrier: (2P: 2pcs, 3P: 4pcs, 4P: 6pcs)				
			Rear connection	Mounting screw: M6×85 (4pcs)				

Note *1 When wired as shown at the bottom of page 672, 3-pole models can be used for up to 400VDC, and 4-pole models for up to 500VDC.

Operating Characteristics

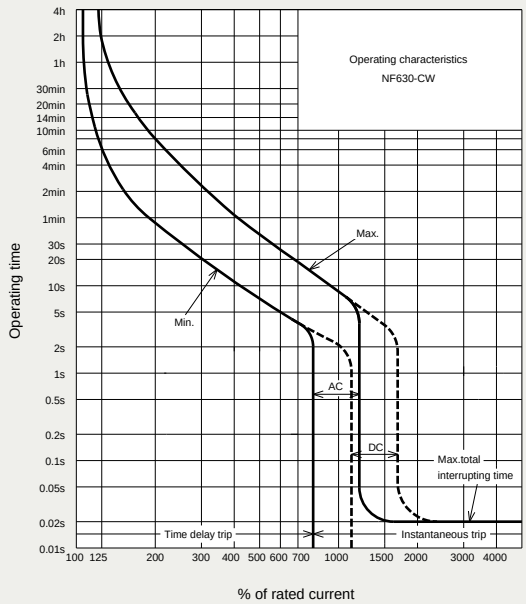

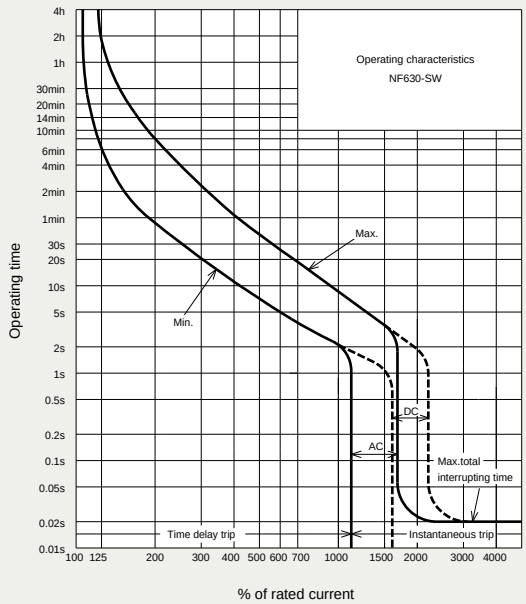

Internal Accessories

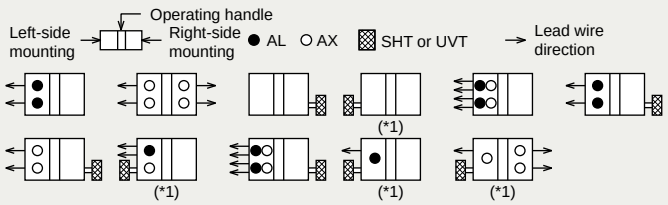

Note *1 Right-side mounting is standard of SHT and UVT. Specify separately for left-side mounting.

Temperature Compensation Curve

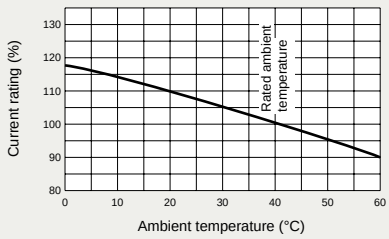

External Accessories

Accessories			Type name
Operating handle	F		F-4S
	V		V-4S
Mechanical interlock	MI	2, 3P	MI-4SW3
		4P	MI-4SW4
Auxiliary handle	HT		HT-4SW

Note *1 Specify the operation method and voltage. Order in combination with the breaker unit.

Accessories				Type name
Terminal cover	Large	TC-L	2, 3P	TCL-4SW3
			4P	TCL-4SW4
	Skeleton	TTC	2, 3P	TTC-4SW3
			4P	TTC-4SW4
	Rear	BTC	2, 3P	BTC-4SW3
			4P	BTC-4SW4
Handle lock device		HL		HL-4SW
		HL-S		HLS-4SW
Electrical operation device		NFM	3P	(*1)
			4P	

Outline Drawing

Front connection

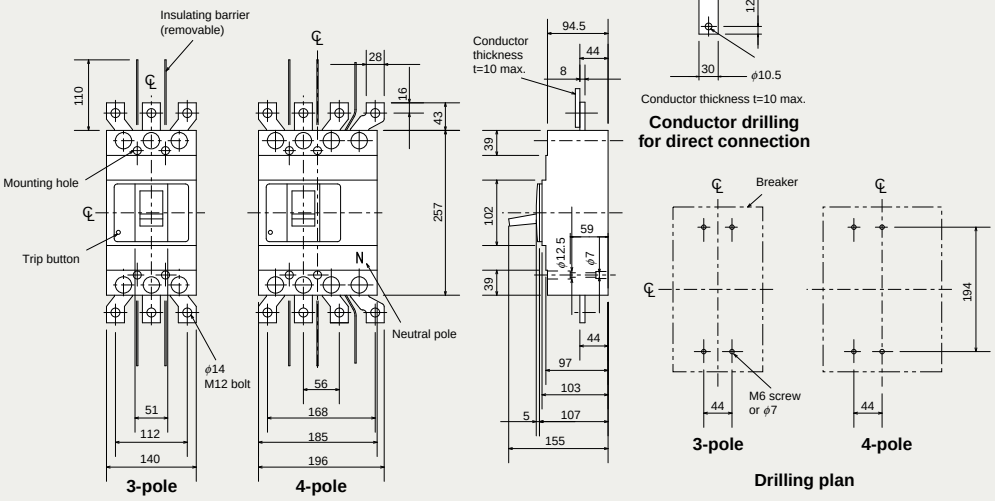

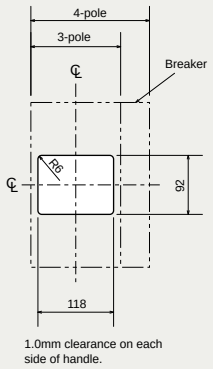

Rear connection

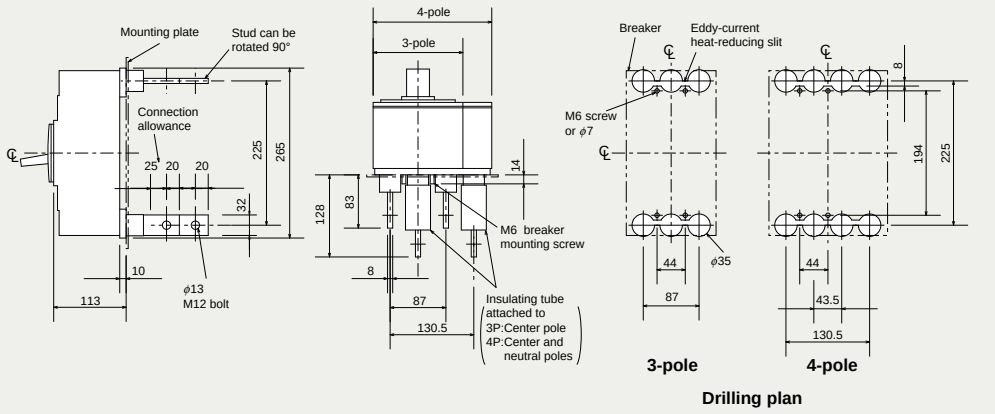

Boring dimensions for rear connection type barriers (3-pole)

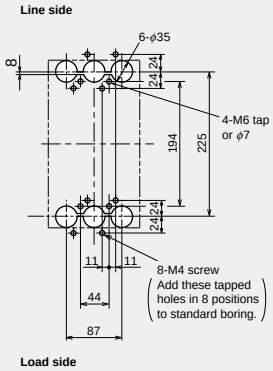

Note The bore dimensional drawing shows the breaker viewed from the rear.

Plug-in

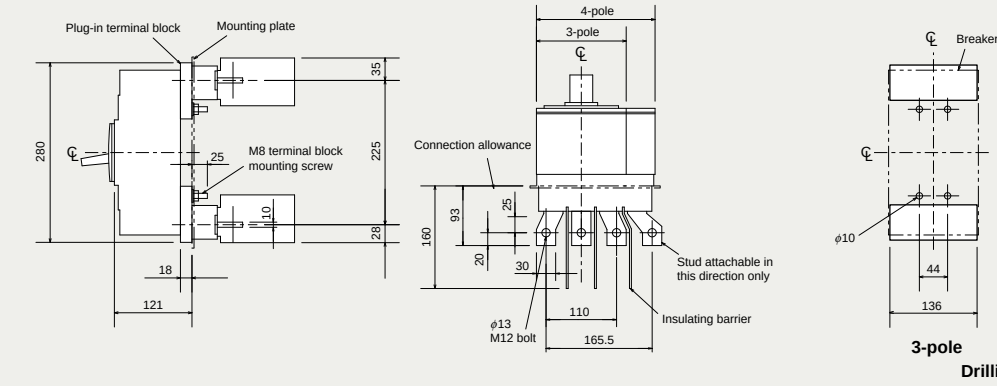

Remark: 1. 2-pole models are 3-pole models with the central pole removed.

NF630-SEW
NF630-HEW
NF630-REW

NF630-SEW

Model				NF630-SEW		NF630-HEW		NF630-REW
Rated current In (A)				300-630 adjustable				
Number of poles				3	4	3	4	3
Rated insulation voltage Ui (V)				690		690		690
Rated short-circuit breaking capacity (kA)	IEC 60947-2 (Icu/Ics)	AC	690V	10/10		35/18		–
			500V	30/30		50/50		70/35
			440V	42/42		65/65		125/63
			400V	50/50		70/70		125/63
			230V	85/85		100/100		150/75
Standard attached parts			Front connection	Mounting screw: M6×72 (4pcs) Insulating barrier: (3P: 4pcs, 4P: 6pcs)				
			Rear connection	Mounting screw: M6×85 (4pcs)				

Operating Characteristics

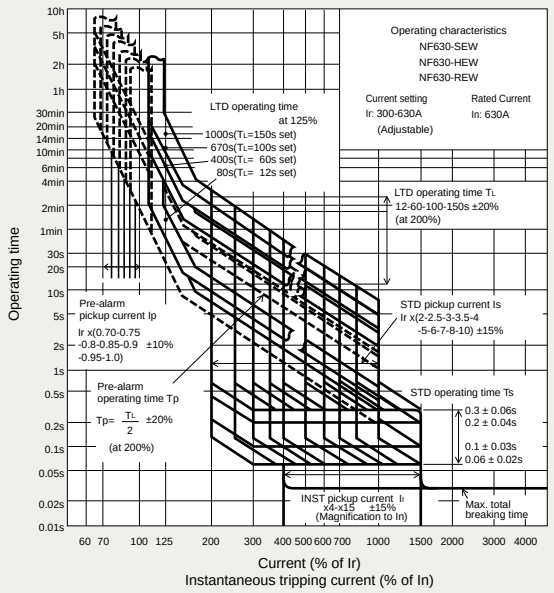

Internal Accessories

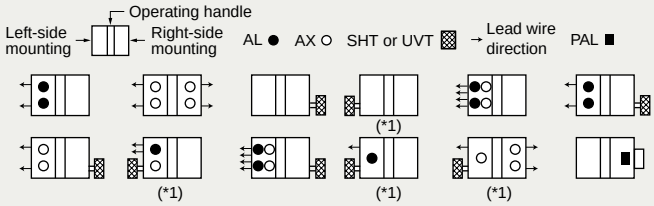

Note *1 Right-side mounting is standard of SHT and UVT. Specify separately for left-side mounting.

Current Reducing Curve

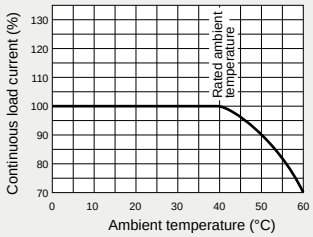

External Accessories

Accessories			Type name
Operating handle	F		F-4S
	V		V-4S
Mechanical interlock	MI	3P	MI-4SW3
		4P	MI-4SW4
Auxiliary handle	HT		HT-4SW

Notes *1 Specify the operation method and voltage. Order in combination with the breaker unit.
*2 This is for NF630-SEW. For rear terminal cover of NF630-HEW/REW, use PTC-4SW3.
*3 This is for NF630-SEW/HEW.

Accessories				Type name
Terminal cover	Large	TC-L	3P	TCL-4SW3 (*2)
			4P	TCL-4SW4 (*3)
	Skeleton	TTC	3P	TTC-4SW3
			4P	TTC-4SW4
	Rear	BTC	3P	BTC-4SW3 (*2)
			4P	BTC-4SW4 (*3)
Handle lock device		HL		HL-4SW
		HL-S		HLS-4SW
Electrical operation device		NFM	3P	(*1)
			4P	

Outline Drawing

Front connection

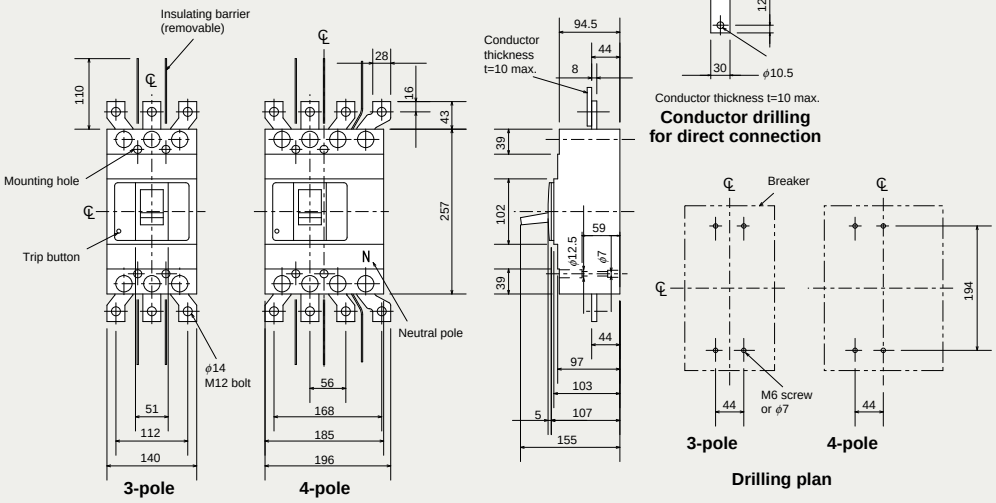

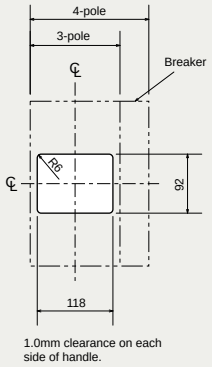

Rear connection

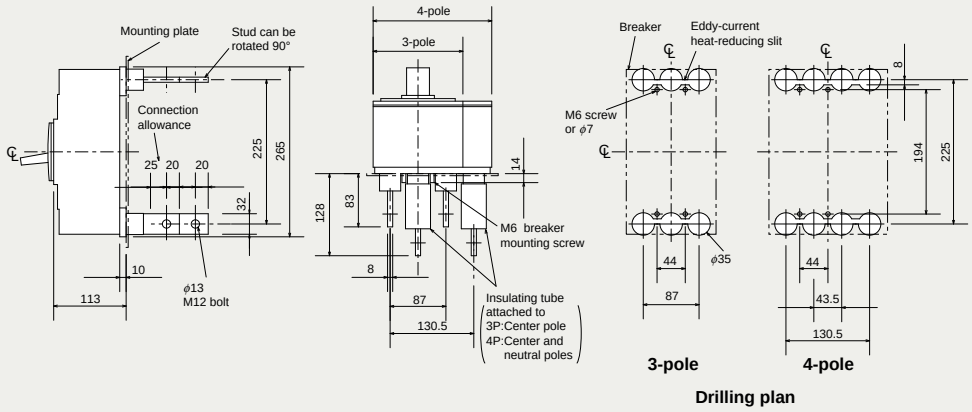

Boring dimensions for rear connection type barriers (3-pole)

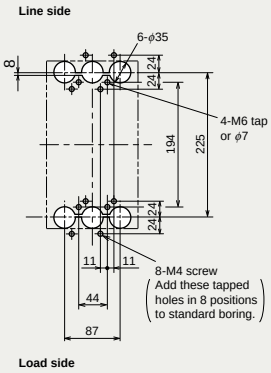

Note The bore dimensional drawing shows the breaker viewed from the rear.

Plug-in

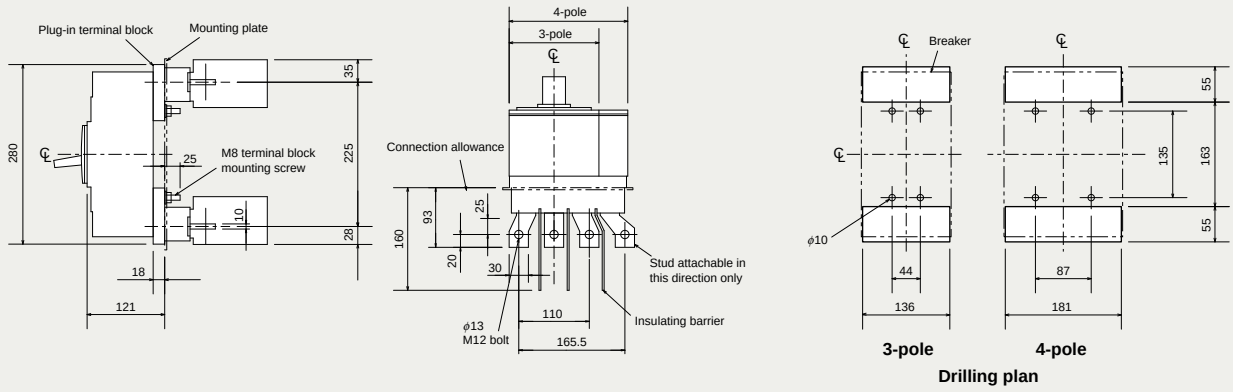

NF800-CEW
NF800-SEW
NF800-HEW
NF800-REW

NF800-SEW

Model				NF800-CEW	NF800-SEW		NF800-HEW		NF800-REW
Rated current In (A)				400-800 adjustable					
Number of poles				3	3	4	3	4	3
Rated insulation voltage Ui (V)				690	690		690		690
Rated short-circuit breaking capacity (kA)	IEC 60947-2 (Icu/Ics)	AC	690V	–	10/10		15/15		–
			500V	18/9	30/30		50/50		70/35
			440V	36/18	42/42		65/65		125/63
			400V	36/18	50/50		70/70		125/63
			230V	50/25	85/85		100/100		150/75
Standard attached parts (4-pole models are provided with auxiliary handle.)			Front connection	Mounting screw: M6×35 (4pcs) Insulating barrier: (3P: 2pcs, 4P: 3pcs)					
			Rear connection	Mounting screw: M6×40 (4pcs)					

Operating Characteristics

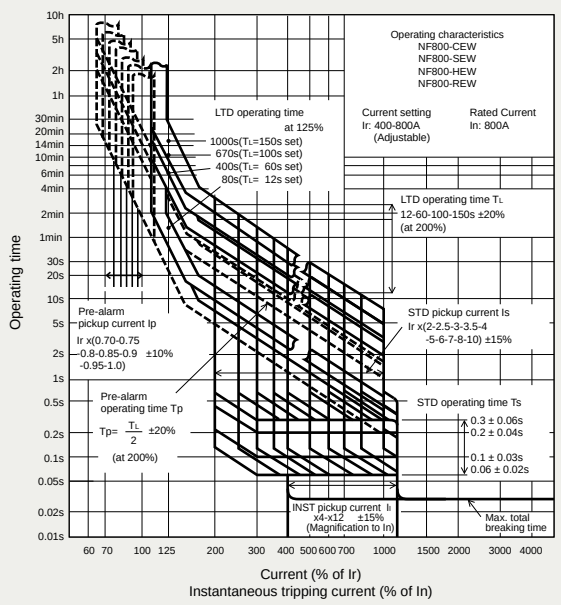

Internal Accessories

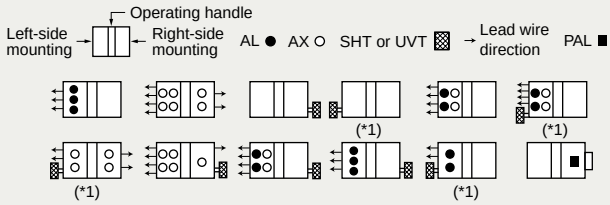

Note *1 Right-side mounting is standard of SHT and UVT. Specify separately for left-side mounting.

Current Reducing Curve

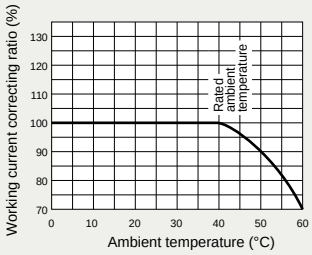

External Accessories

Accessories			Type name
Operating handle	F		F-8S
	V		V-8S
Mechanical interlock	MI	3P	MI-8SW3
		4P	MI-8SW4
Auxiliary handle	HT		HT-4SW

Note *1 Specify the operation method and voltage. Order in combination with the breaker unit.

Accessories				Type name
Terminal cover	Large	TC-L	3P	TCL-8SW3
			4P	TCL-8SW4
	Skeleton	TTC	3P	TTC-8SW3
			4P	TTC-8SW4
	Rear	BTC	3P	BTC-8SW3
			4P	BTC-8SW4
Handle lock device		HL		HL-4SW
		HL-S		HLS-8SW
Electrical operation device		NFM	3P	(*1)
			4P	

Outline Drawing

Front connection

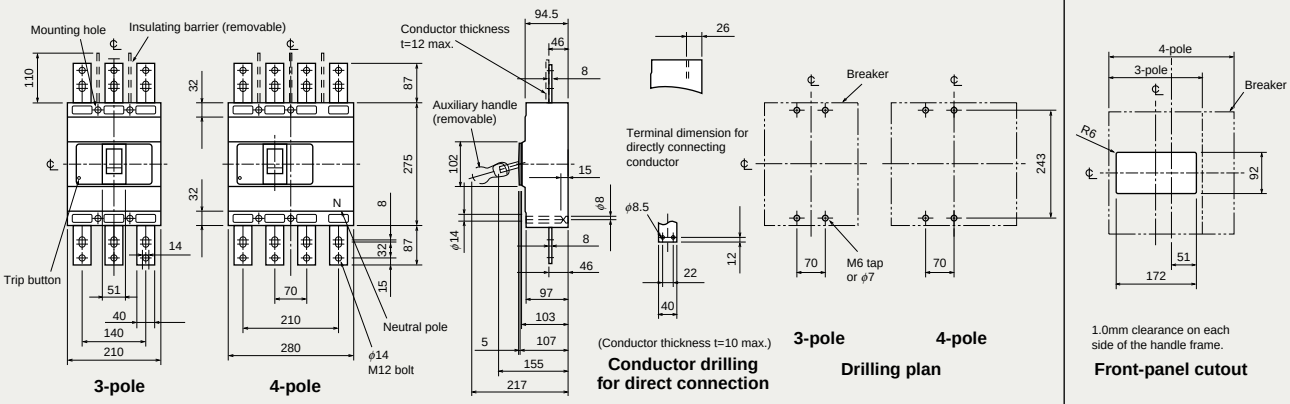

Rear connection

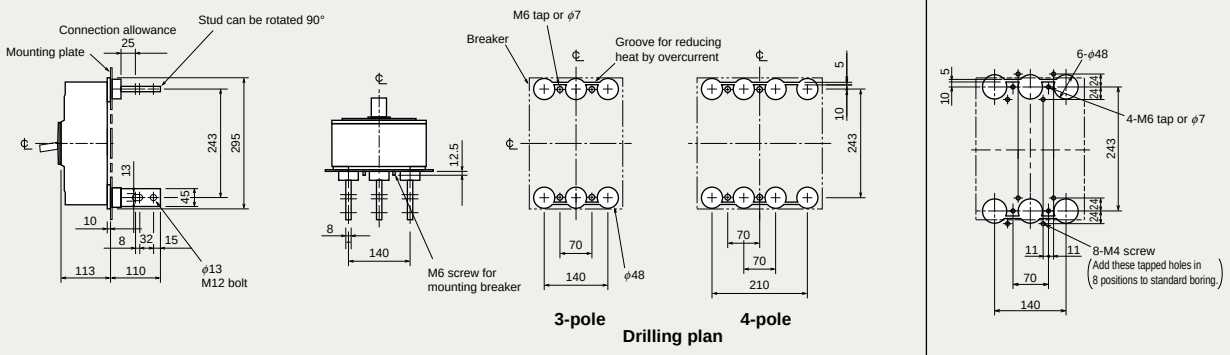

Plug-in

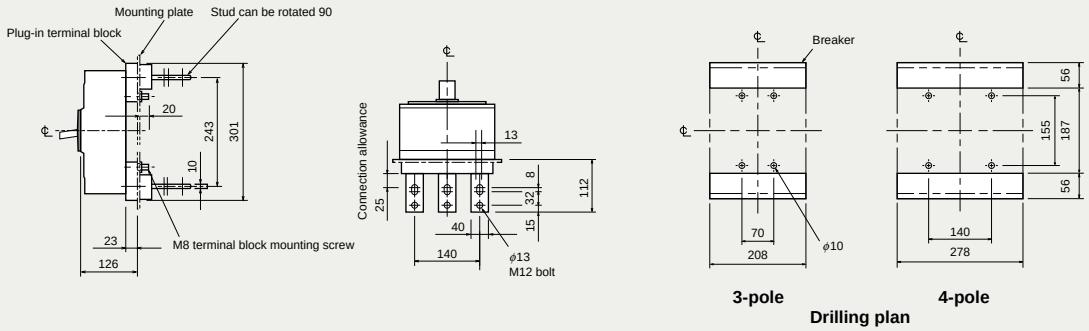

NF800-SDW

NF800-SDW

Model				NF800-SDW
Rated current In (A)				(700), 800
Number of poles				2
Rated insulation voltage Ui (V)				690
Rated short-circuit breaking capacity (kA)	IEC 60947-2 (Icu/Ics) Time constant not larger than 10ms	DC	250V	40/40
Standard attached parts (4-pole models are provided with auxiliary handle.)			Front connection	Mounting screw: M6×35 (4pcs) Insulating barrier: (2P: 1pc, 3P: 2pcs, 4P: 3pcs)
			Rear connection	Mounting screw: M6×40 (4pcs)

Operating Characteristics

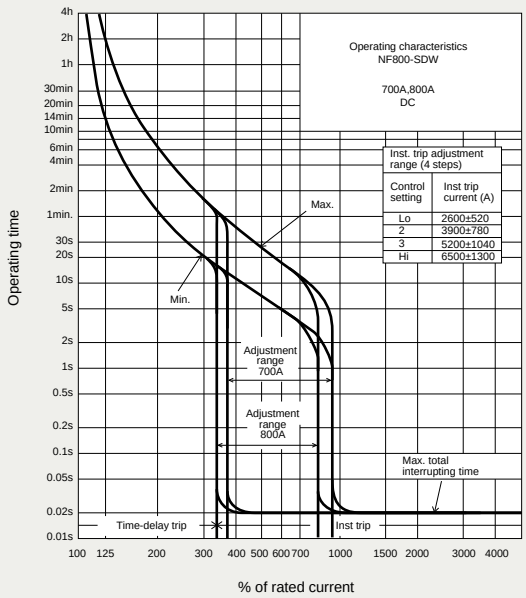

Internal Accessories

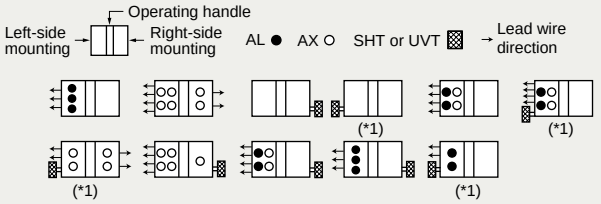

Note *1 Right-side mounting is standard of SHT and UVT. Specify separately for left-side mounting.

Temperature Compensation Curve

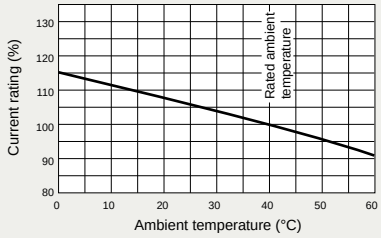

External Accessories

Accessories			Type name
Operating handle	F		F-8S
	V		V-8S
Mechanical interlock	MI	2, 3P	MI-8SW3
		4P	MI-8SW4
Auxiliary handle	HT		HT-4SW

Note *1 Specify the operation method and voltage. Order in combination with the breaker unit.

Accessories				Type name
Terminal cover	Large	TC-L	2, 3P	TCL-8SW3
			4P	TCL-8SW4
	Skeleton	TTC	2, 3P	TTC-8SW3
			4P	TTC-8SW4
	Rear	BTC	2, 3P	BTC-8SW3
			4P	BTC-8SW4
Handle lock device		HL		HL-4SW
		HL-S		HLS-8SW
Electrical operation device		NFM	2, 3P	(*1)
			4P	

Outline Drawing

Front connection

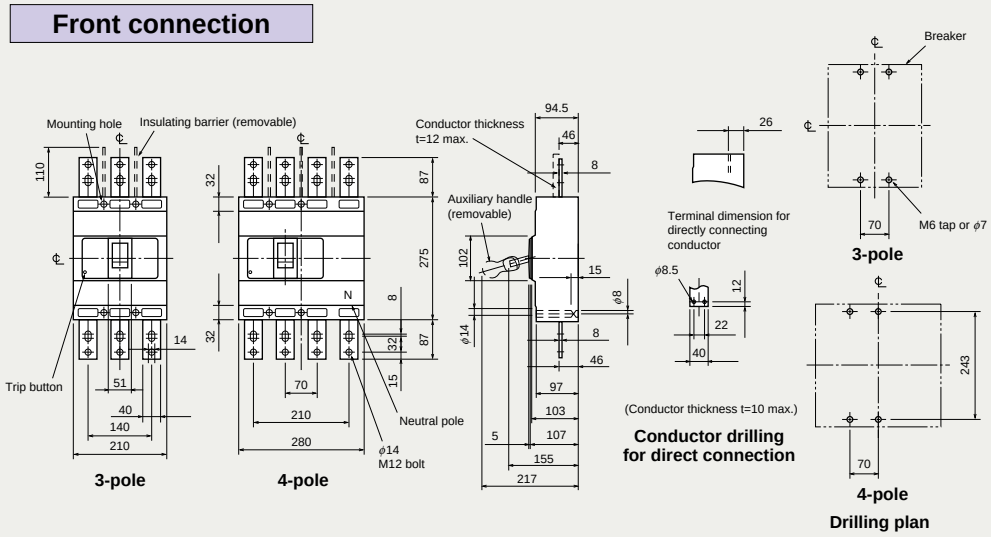

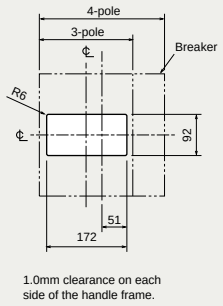

Rear connection

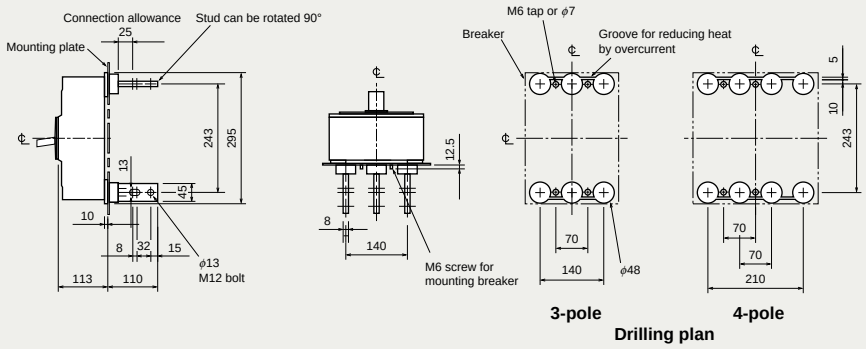

Boring dimensions for rear connection type barriers (3-pole)

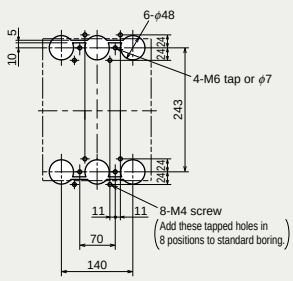

Plug-in

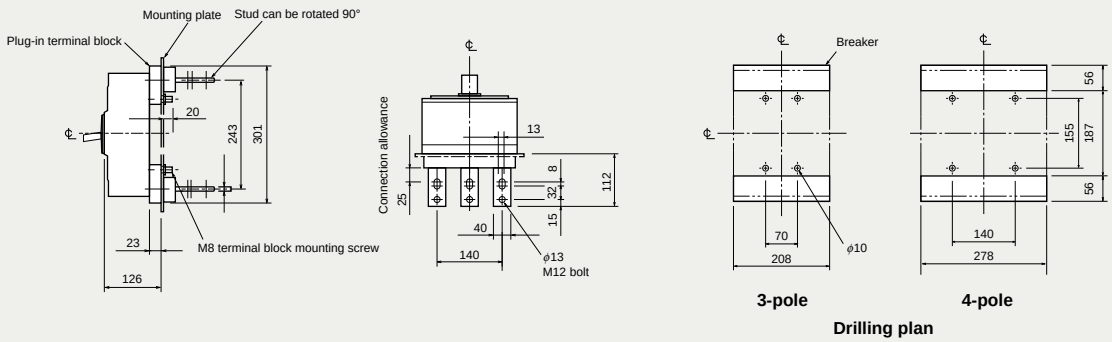

Remarks: 1. Standard specification of NF800-SDW is 2-pole model. 3-pole and 4-pole models are available for DC special voltage.
2. 2-pole models are 3-pole models with the central pole removed.

NF800-UEW

NF800-UEW

Model				NF800-UEW	
Rated current In (A)				400-800 adjustable	
Number of poles				3	4
Rated insulation voltage Ui (V)				690	
Rated short-circuit breaking capacity (kA)	IEC 60947-2 (Icu/Ics)	AC	690V	35/35	
			500V	170/170	
			440V	200/200	
			400V	200/200	
			230V	200/200	
Standard attached parts (4-pole models are provided with auxiliary handle.)			Front connection	Mounting screw: 3P: M6×35, M6×132 (2pcs each) 4P: M6×35 (3pcs), M6×132 (2pcs) Insulating barrier: (3P: 2pcs, 4P: 3pcs)	
			Rear connection	Mounting screw: 3P: M6×40, M6×137 (2pcs each) 4P: M6×40 (3pcs), M6×137 (2pcs)	

Operating Characteristics

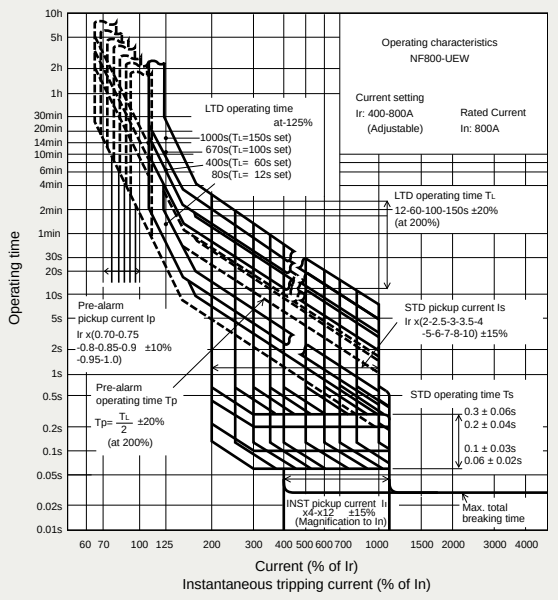

Internal Accessories

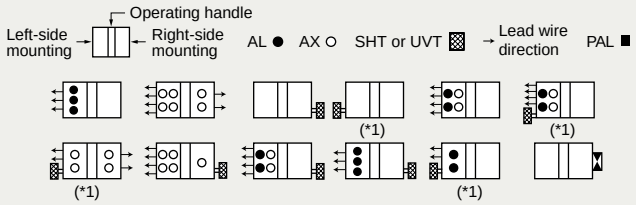

Note *1 Right-side mounting is standard of SHT and UVT. Specify separately for left-side mounting.

Current Reducing Curve

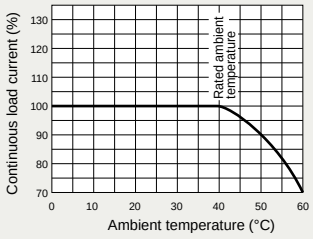

External Accessories

Accessories			Type name
Operating handle	F		F-8U
	V		–
Mechanical interlock	MI	3P	MI-8SW3
		4P	MI-8SW4
Auxiliary handle	HT		HT-4SW

Note *1 Specify the operation method and voltage. Order in combination with the breaker unit.

Accessories				Type name
Terminal cover	Large	TC-L	3P	TCL-8UW3
			4P	TCL-8UW4
	Skeleton	TTC	3P	–
			4P	–
	Rear	BTC	3P	BTC-8SW3
			4P	BTC-8SW4
Handle lock device		HL		HL-4SW
		HL-S		HLS-8UW
Electrical operation device				(*1)

Outline Drawing

Front connection

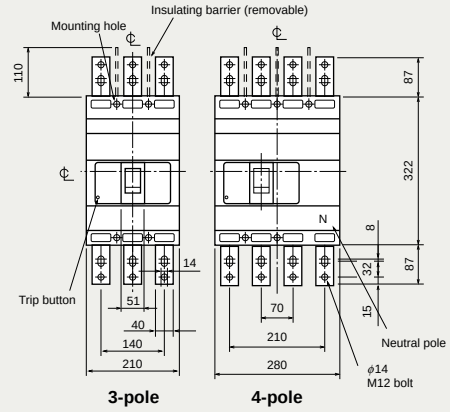

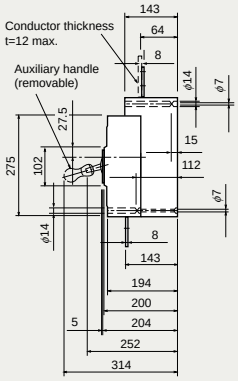

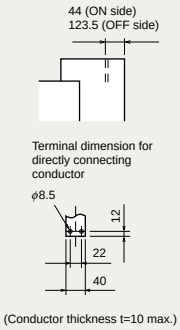

Conductor drilling for direct connection

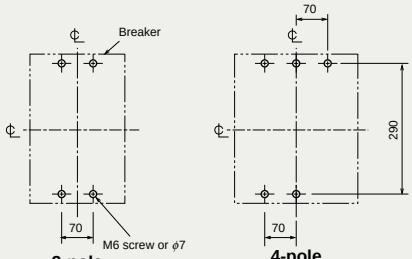

Drilling plan

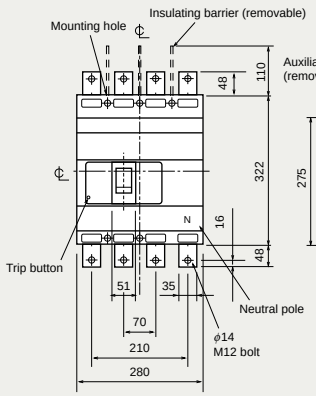

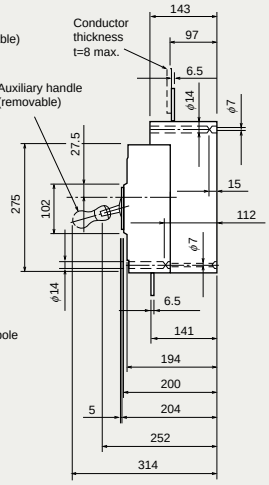

NF400-UEW 4-pole

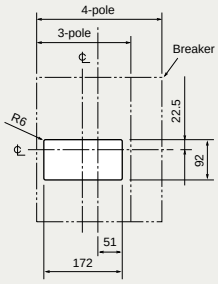

1.0mm clearance on each side of the handle frame.

Front-panel cutout

Rear connection

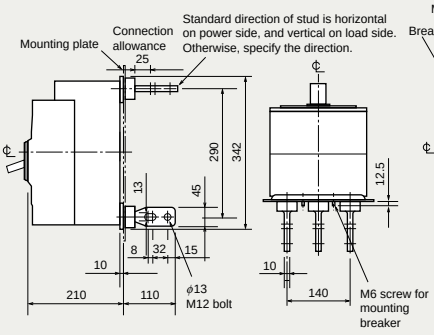

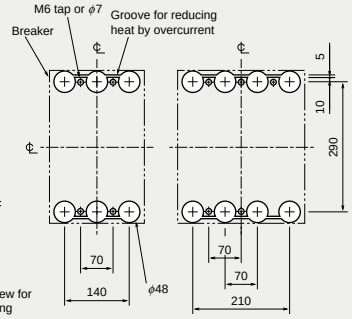

3-pole **4-pole**

Drilling plan

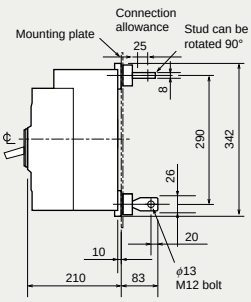

NF400-UEW 4-pole

Boring dimensions for rear connection type barriers (3-pole)

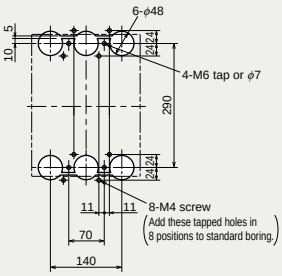

NF1000-SEW
NF1250-SEW

NF1250-SEW

Model				NF1000-SEW		NF1250-SEW	
Rated current In (A)				500−1000 Adjustable		600−1250 Adjustable	
Number of poles				3	4	3	4
Rated insulation voltage Ui (V)				690		690	
Rated short-circuit breaking capacity (kA)	IEC 60947-2 (Icu/Ics)	AC	690V	25/13		25/13	
			500V	65/33		65/33	
			440V	85/43		85/43	
			400V	85/43		85/43	
			230V	125/63		125/63	
Standard attached parts			Front connection	Mounting screw: M8×40 (4pcs) Insulating barrier: (3P: 2pcs, 4P: 3pcs) Auxiliary handle: (1pc)			
			Rear connection	Mounting screw: M8×40 (4pcs) Insulating barrier: (3P: 2pcs, 4P: 4pcs) Auxiliary handle: (1pc)			

Operating Characteristics

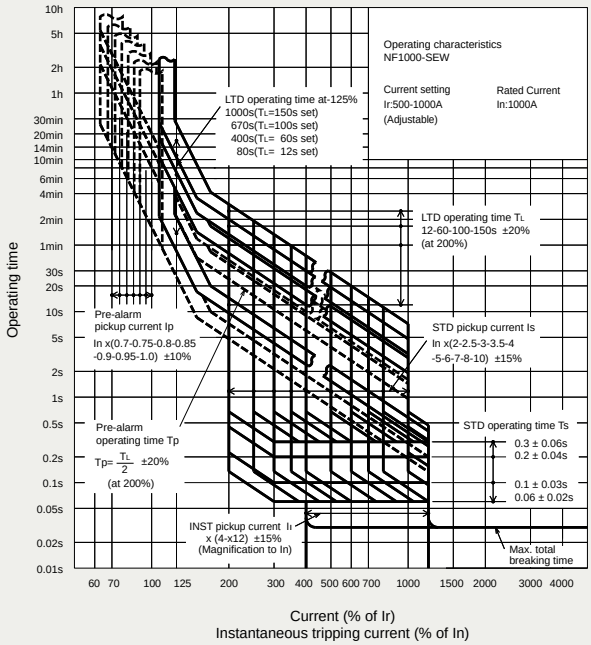

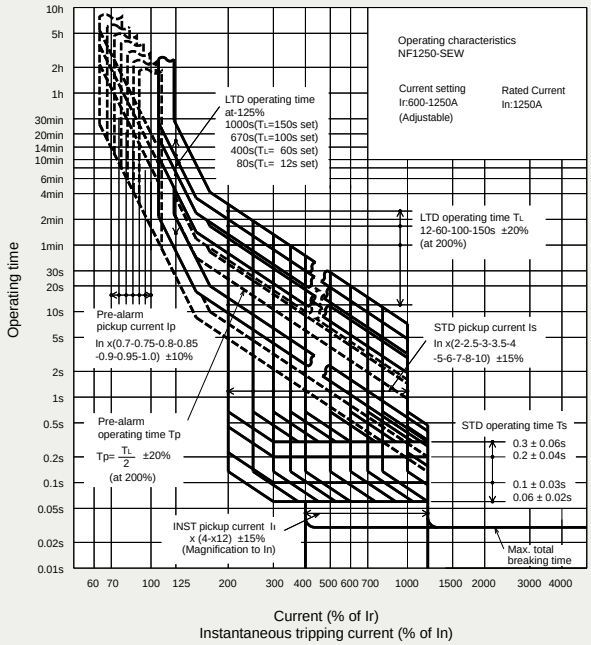

Internal Accessories

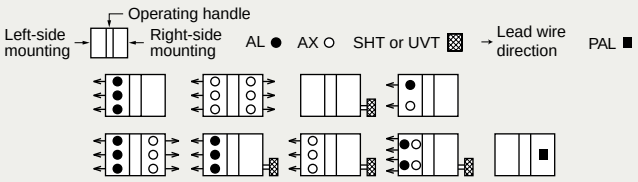

Current Reducing Curve

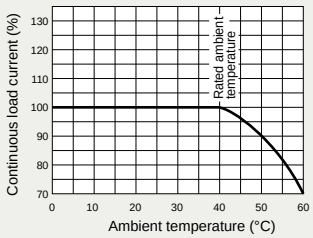

External Accessories

(An order for ☆ should be placed at the same time as an order of circuit breaker main body.)

Accessories			Type name	Accessories			Type name
Operating handle	F	3P	F10SW	Auxiliary handle	HT		HT-10SW
		4P	F10SW4P	Handle lock device	HL		HL (☆)
Mechanical interlock	MI	3P	MI-10SW3	Large terminal cover	TC-L	3P	TCL-10SW3
		4P	MI-10SW4			4P	TCL-10SW4
				Electrical operation device	NFM	3P	(*1)
						4P	

Note *1 Specify the operation method and voltage. Order in combination with the breaker unit.

Outline Drawing

Front connection

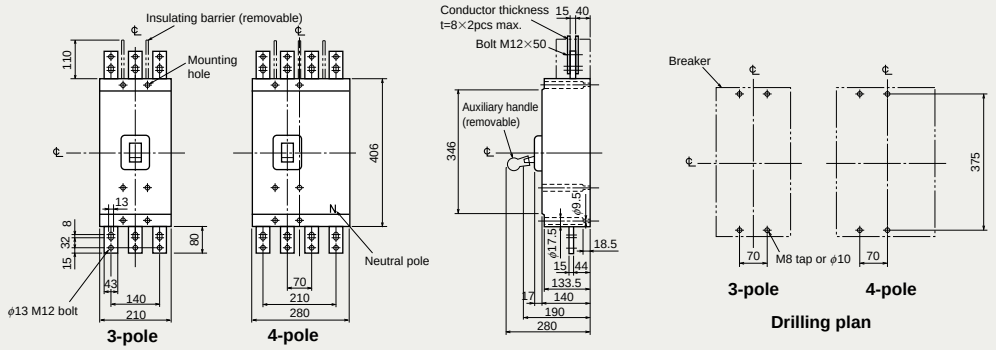

Rear connection

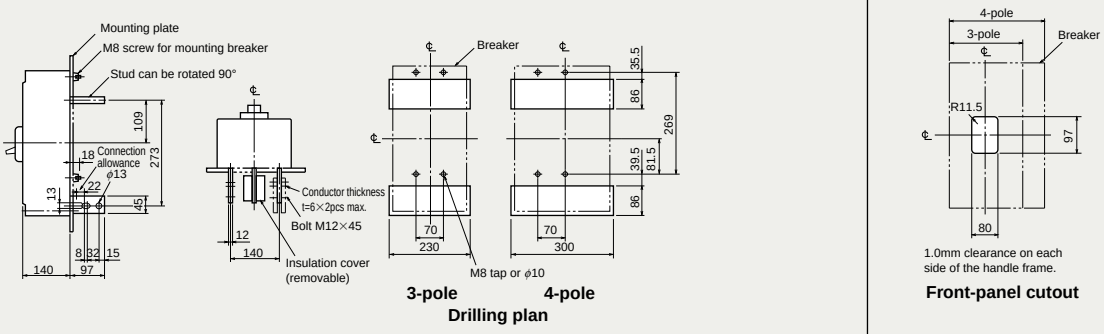

Plug-in

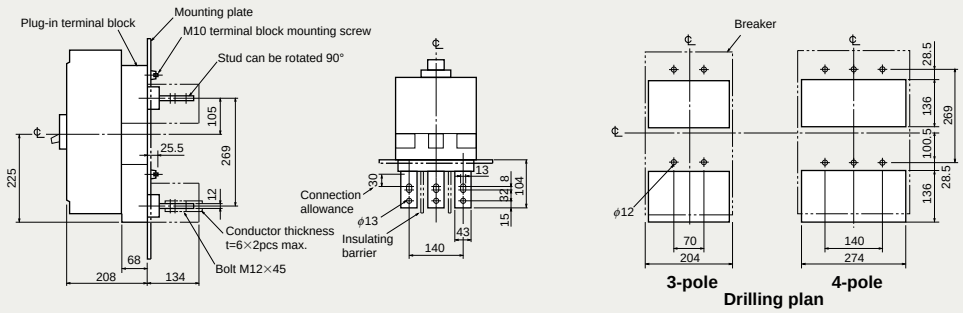

NF1250-SDW

NF1250-SDW

Model				NF1250-SDW
Rated current In (Amp.)				1000, 1250
Number of poles				2
Rated insulation voltage Ui (V)				690
Rated short-circuit breaking capacity (kA)	IEC 60947-2 (Icu/Ics) Time constant not large than 10ms	DC	250V	40/20
Standard Attached parts			Front connection	Mounting screw: M8×40 (4pcs) Insulating barrier: (2P: 1pc, 3P: 2pcs, 4P: 3pcs) Auxiliary handle: (1pc)
			Rear connection	Mounting screw: M8×40 (4pcs) Insulating barrier: (3P: 2pcs, 4P: 4pcs) Auxiliary handle: (1pc)

Operating Characteristics

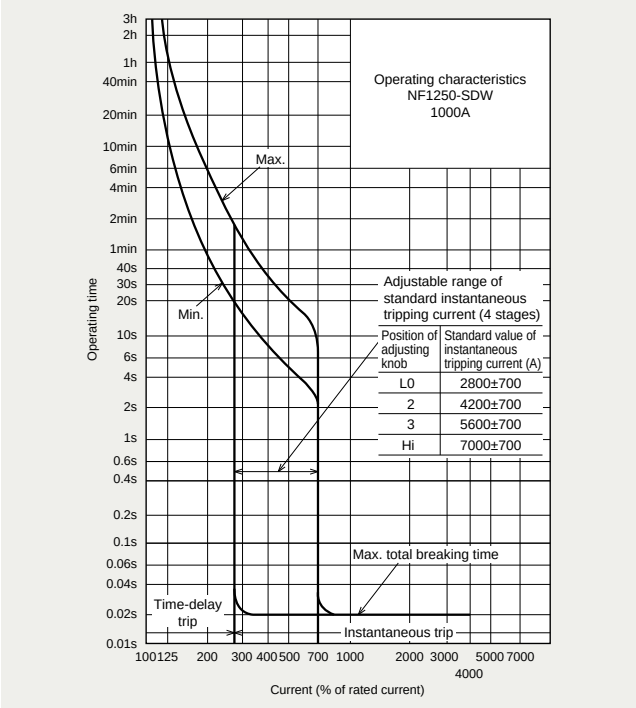

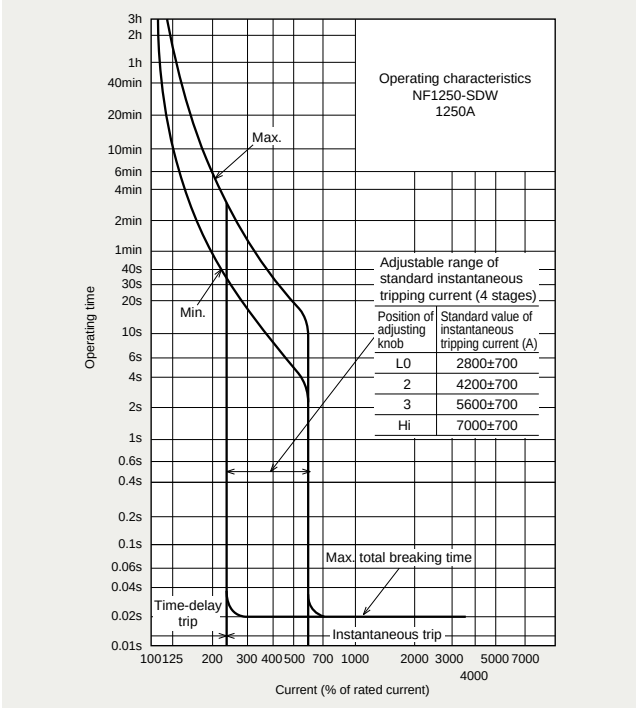

Internal Accessories

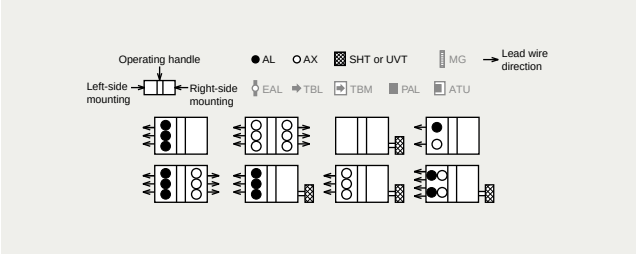

Temperature Compensation Curve

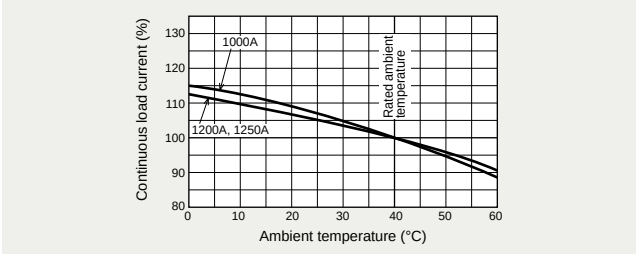

External Accessories

(An order for ☆ should be placed at the same time as an order of circuit breaker main body.)

Accessories			Type name	Accessories			Type name
Operating handle	F	2, 3P	F10SW	Auxiliary handle	HT		HT-10SW
		4P	F10SW4P	Handle lock device	HL		HL (☆)
Mechanical interlock	MI	2, 3P	MI-10SW3	Large terminal cover	TC-L	2, 3P	TCL-10SW3
		4P	MI-10SW4			4P	TCL-10SW4
				Electrical operation device	NFM	2, 3P	(*1)
						4P	

Note *1 Specify the operation method and voltage. Order in combination with the breaker unit.

Outline Drawing

Front connection

Same dimensions as NF1000-SEW and NF1250-SEW.

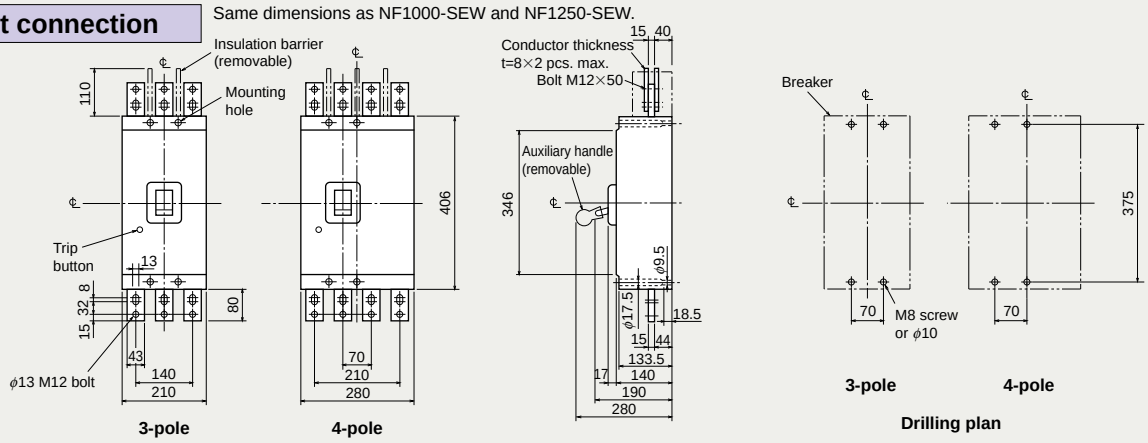

Rear connection

Differing in external dimensions from NF1000-SEW and NF1250-SEW.

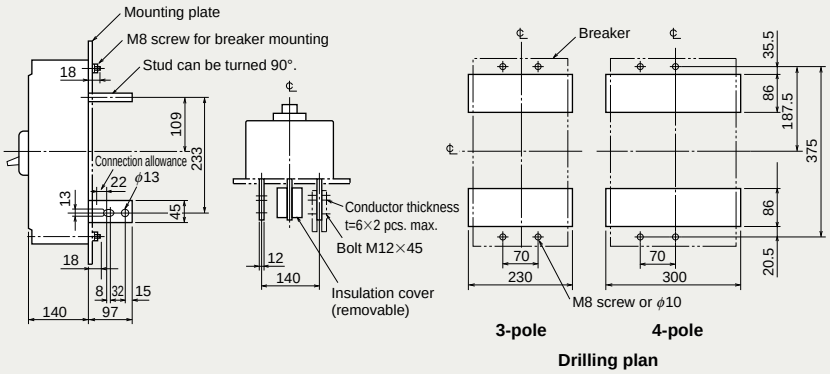

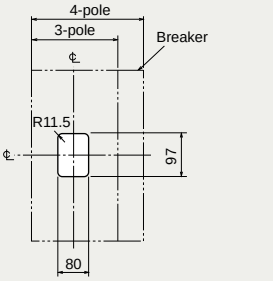

Plug-in

Differing in external dimensions from NF1000-SEW and NF1250-SEW.

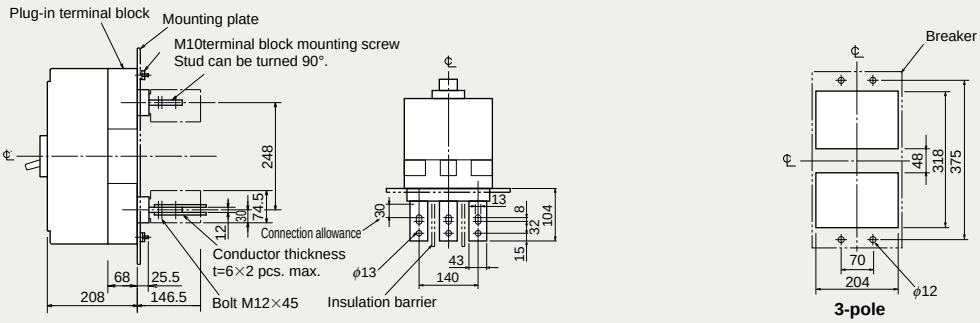

Remarks: 1. Standard specification of NF1250-SDW is 2-pole model. 3-pole and 4-pole models are available for DC special voltage.
2. 2-pole models are 3-pole models with the central pole removed.

NF1600-SEW

NF1600-SEW

Model				NF1600-SEW	
Rated current In (A)				Adjustable 800−1600	
Number of poles				3	4
Rated insulation voltage Ui (V)				690	
Rated short-circuit breaking capacity (kA)	IEC 60947-2 (Icu/Ics)	AC	690V	25/13	
			500V	65/33	
			440V	85/43	
			400V	85/43	
			230V	125/63	
Standard attached parts			Front connection	Mounting screw: M8 × 40 (4pcs) Insulating barrier: (3P: 2pcs, 4P: 3pcs) Auxiliary handle: (1pc)	
			Rear connection	Mounting screw: M8 × 40 (4pcs) Auxiliary handle: (1pc)	

Operating Characteristics

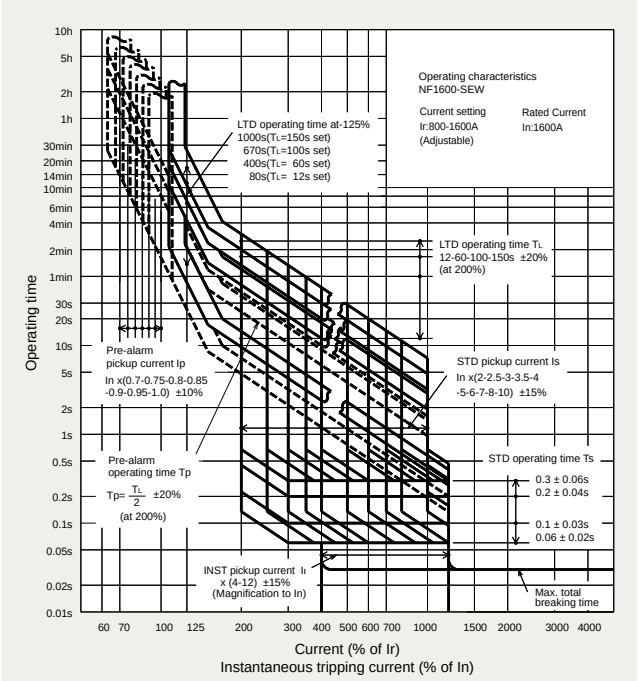

Internal Accessories

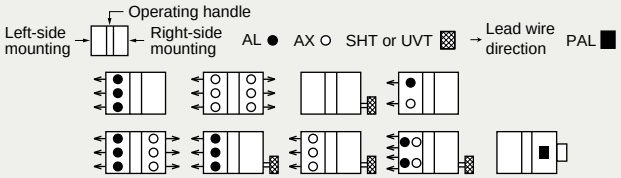

Current Reducing Curve

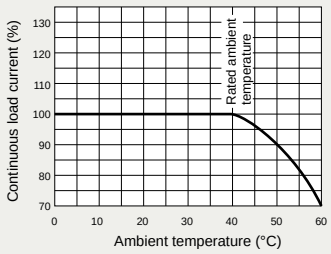

External Accessories

(An order for ☆ should be placed at the same time as an order of circuit breaker main body.)

Accessories			Type name	Accessories			Type name
Operating handle	F	3P	F10SW	Auxiliary handle	HT		HT-10SW
		4P	F10SW4P	Handle lock device	HL		HL (☆)
Mechanical interlock	MI	3P	MI-16SW3	Electrical operation device	NFM	3P	(*1)
		4P	MI-16SW4			4P	

Note *1 Specify the operation method and voltage. Order in combination with the breaker unit.

Outline Drawing

Front connection

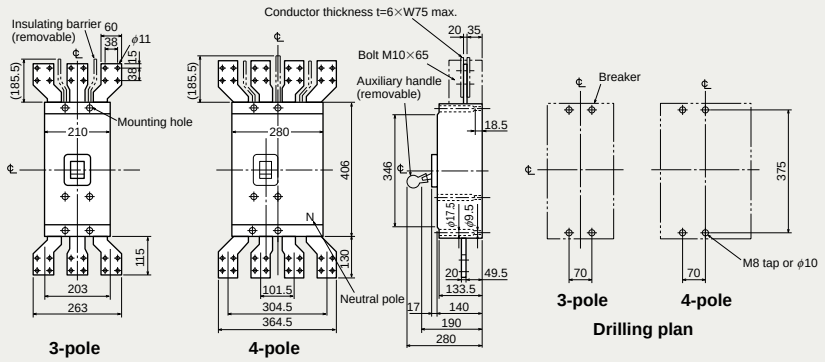

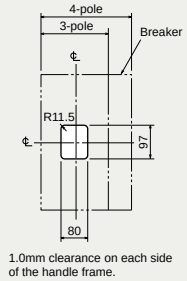

Front-panel cutout

Rear connection

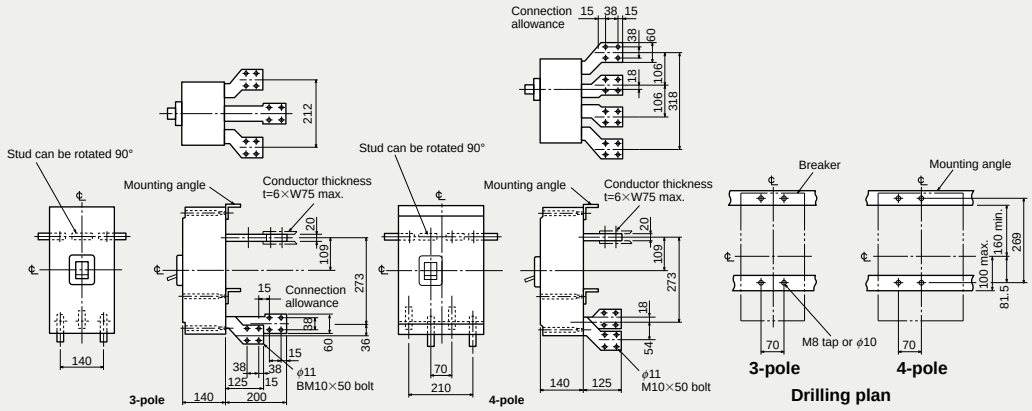

NF1600-SDW

NF1600-SDW

Model				NF1600-SDW
Rated current In (Amp.)				1600
Number of poles				2
Rated insulation voltage Ui (V)				690
Rated short-circuit breaking capacity (kA)	IEC 60947-2 (Icu/Ics) Time constant not large than 10msec	DC	250V	40/20
Standard Attached parts			Front connection	Mounting screw: M8×40 (4pcs) Insulating barrier: (2P: 1pc, 3P: 2pcs, 4P: 3pcs) Auxiliary handle: (1pc)
			Rear connection	Mounting screw: M8×40 (4pcs) Auxiliary handle: (1pc)

Operating Characteristics

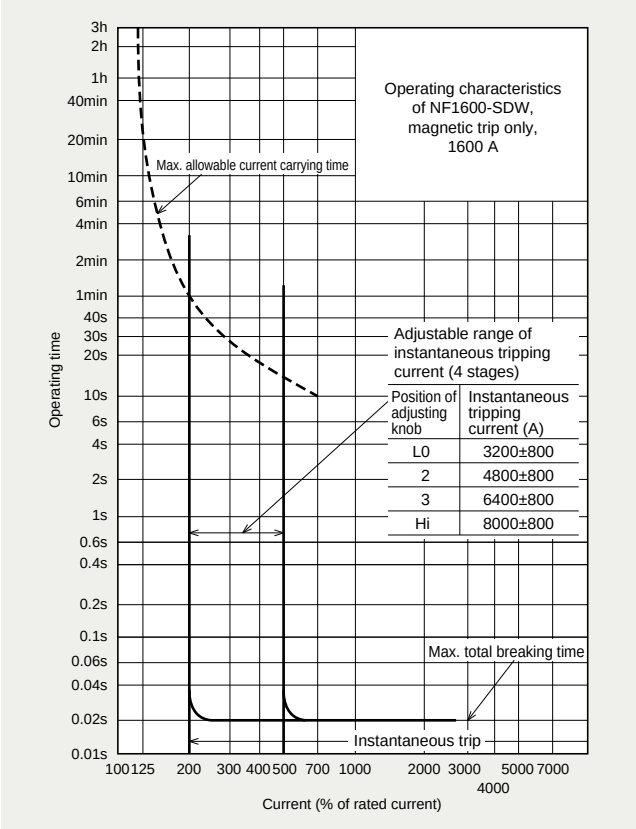

Internal Accessories

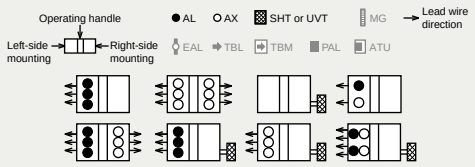

External Accessories

(An order for ☆ should be placed at the same time as an order of circuit breaker main body.)

Accessories			Type name	Accessories			Type name
Operating handle	F	2, 3P	F10SW	Auxiliary handle	HT		HT-10SW
		4P	F10SW4P	Handle lock device	HL		HL (☆)
Mechanical interlock	MI	2, 3P	MI-16SW3	Electrical operation device	NFM	2, 3P	(*1)
		4P	MI-16SW4			4P	

Note *1 Specify the operation method and voltage. Order in combination with the breaker unit.

Outline Drawing

Front connection

Same dimensions as NF1600-SEW.

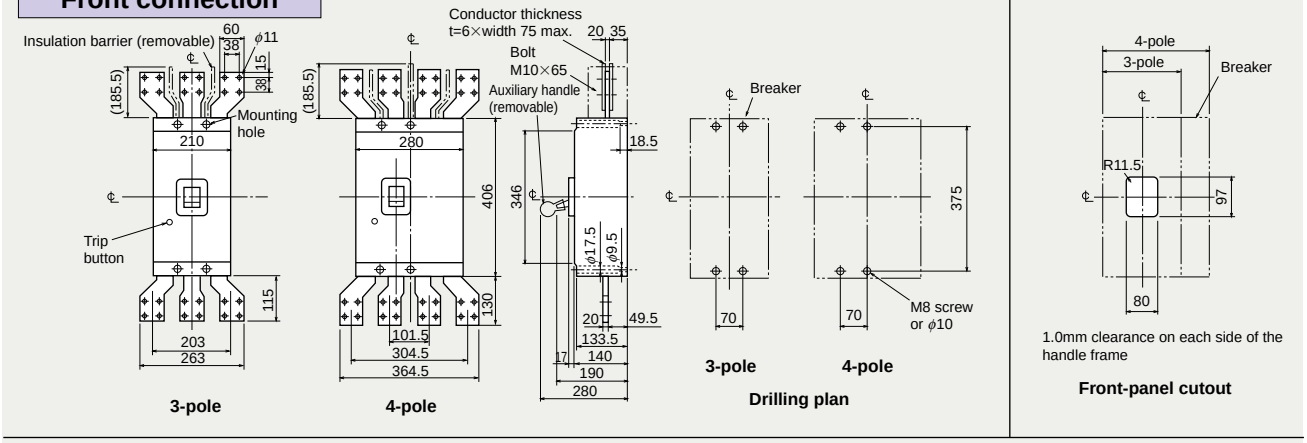

Rear connection

Differing in external dimensions from NF1600-SEW.

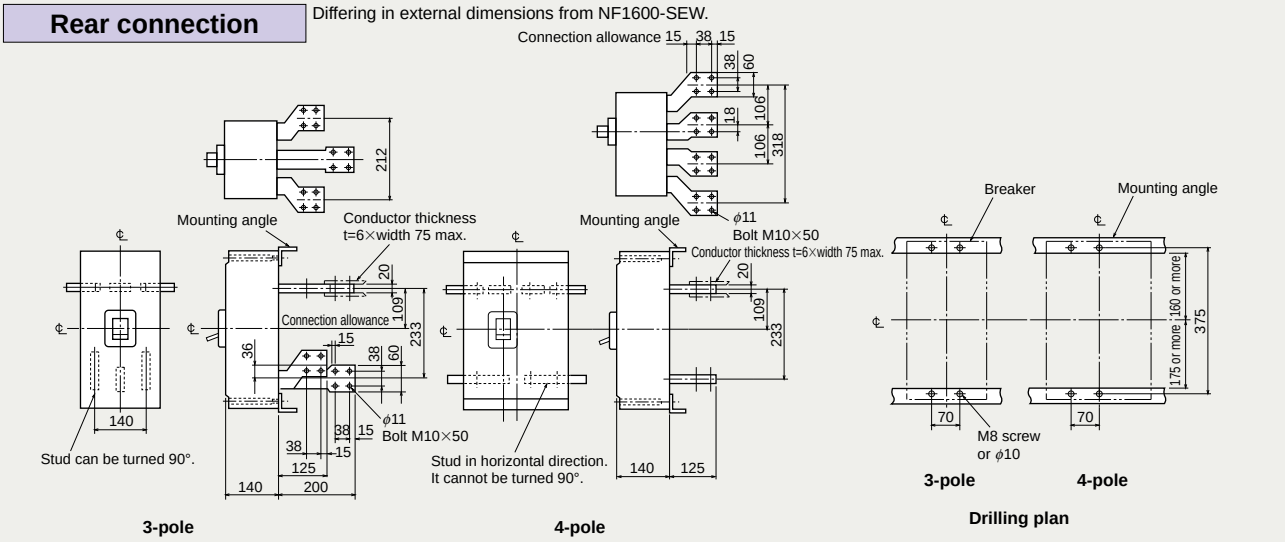

Remarks: 1. Standard specification of NF1600-SDW is 2-pole model. 3-pole and 4-pole models are available for DC special voltage.
2. 2-pole models are 3-pole models with the central pole removed.

NV32-SV NV63-CV NV63-SV NV63-HV

NV63-SV

Model				NV32-SV	NV63-CV		NV63-SV		NV63-HV
Rated current In (A)				(5) 6 10 (15) 16 20 25 (30) 32	(5) (10) (15) 16 20 25 (30) 32 40 50 (60) 63		(5) (10) (15) 16 20 25 (30) 32 40 50 (60) 63		(15) 16 20 25 (30) 32 40 50 (60) 63
Number of poles				3	2	3	2	3	3
Phase line				3φ3W, 1φ2W	1φ2W	3φ3W, 1φ2W	1φ2W	3φ3W, 1φ2W	3φ3W, 1φ2W
Rated operational voltage Ue (V)			AC	100-440	100-240	100-440	100-240	100-440	100-440
High-speed type	Rated current sensitivity (mA)			(15) 30 100/200/500 selectable	30	15 30 100/200/500 selectable	(15) 30	(15) 30 100/200/500 selectable	(15) 30 100/200/500 selectable
	Max operating time (s)		at IΔn	0.1	0.1		0.1		0.1
			at 5IΔn	0.04	0.04		0.04		0.04
Time-delay type	Rated current sensitivity (mA)			–	–		–		–
	Max operating time (s)			–	–		–		–
	Inertial operating time (s) (or more)			–	–		–		–
Earth-leakage indication system				Mechanical type (button)	Mechanical type (button)		Mechanical type (button)		Mechanical type (button)
Rated short-circuit breaking capacity (kA)	IEC 60947-2 (Icu/Ics)	AC	440V	5/5	–	2.5/2.5	–	7.5/7.5	10/8
			415V	5/5	–	2.5/2.5	–	7.5/7.5	10/8
			400V	5/5	–	5/5	–	7.5/7.5	10/8
			230V	10/10	7.5/7.5		15/15		25/19
			200V	10/10	7.5/7.5		15/15		25/19
			100V	10/10	7.5/7.5		15/15		25/19
Standard attached parts (Front connection)				Mounting screw: M4×0.7×55 (2pcs) (*1) Insulation barrier: (2P: 1pc, 3P: 2pcs)					

Note *1 Attached to NV63-SV and NV63-HV.

Operating Characteristics

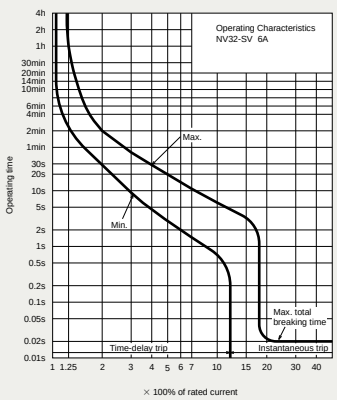

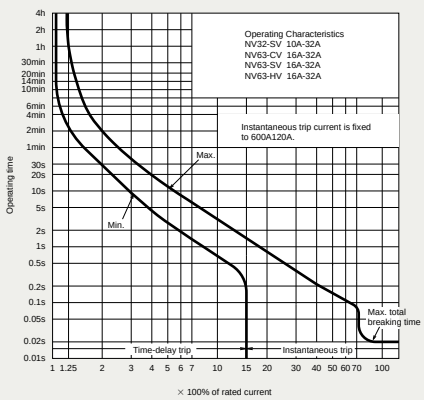

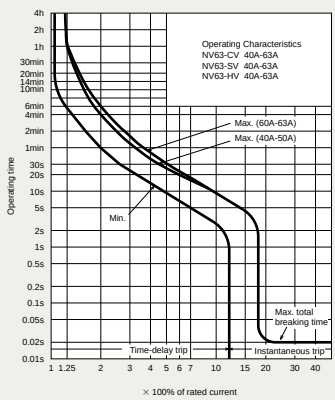

Earth leakage Tripping Characteristics

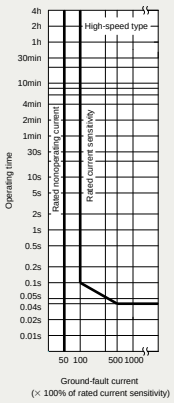

Internal Accessories

Temperature Compensation Curve

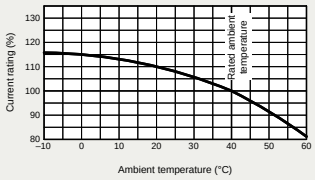

Internal Wiring Diagram

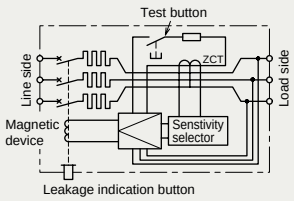

External Accessories

Accessories		Type name
Operating handle	F	F-05SV
	V	V-05SV
Handle lock device	LC	LC-05SV
	HL (*1)	HLF-05SV
		HLN-05SV
	HL-S	HLS-05SV

Note *1 HLF types are used for OFF lock and HLN types for ON lock.

Accessories			Type name
Mechanical interlock		MI	MI-05SV3
Terminal cover	Small	TC-S	TCS-05SV3
	Large	TC-L	TCL-05SV3
			TCL-05SV3L
	Skeleton	TTC	TTC-05SV3
	Rear	BTC	BTC-05SV3
	Plug-in	PTC	PTC-05SV3
IEC 35mm rail mounting adapters			DIN-05SV

Outline Drawing

Front connection

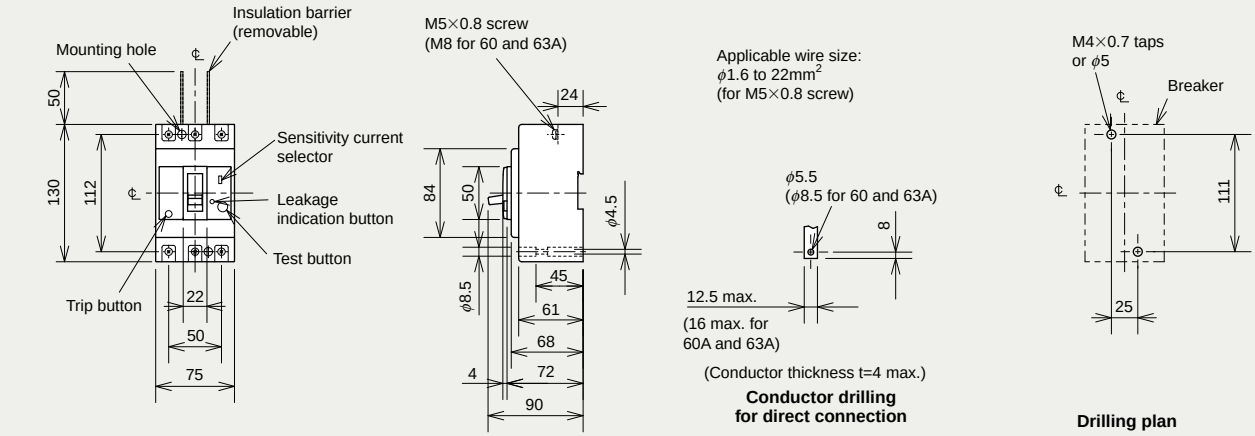

Rear connection

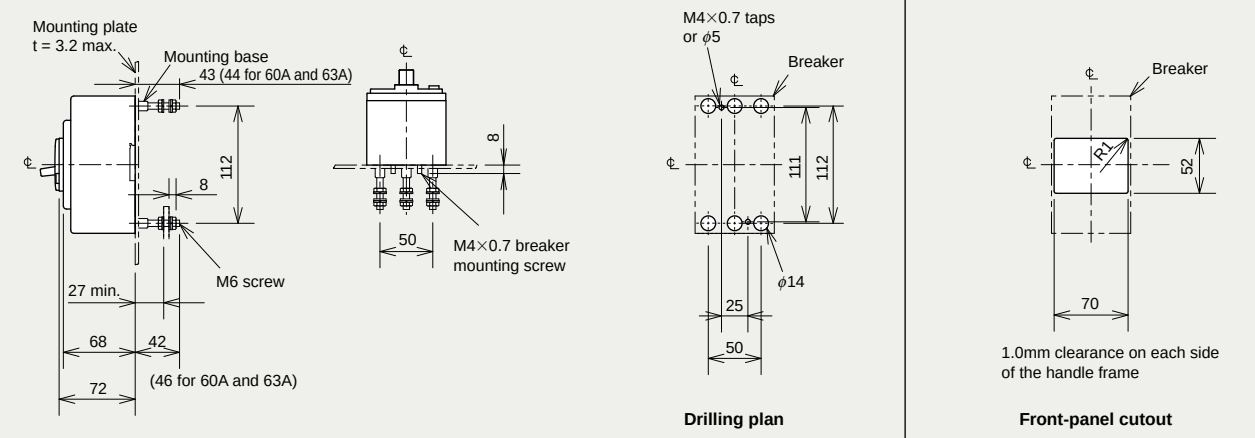

Plug-in

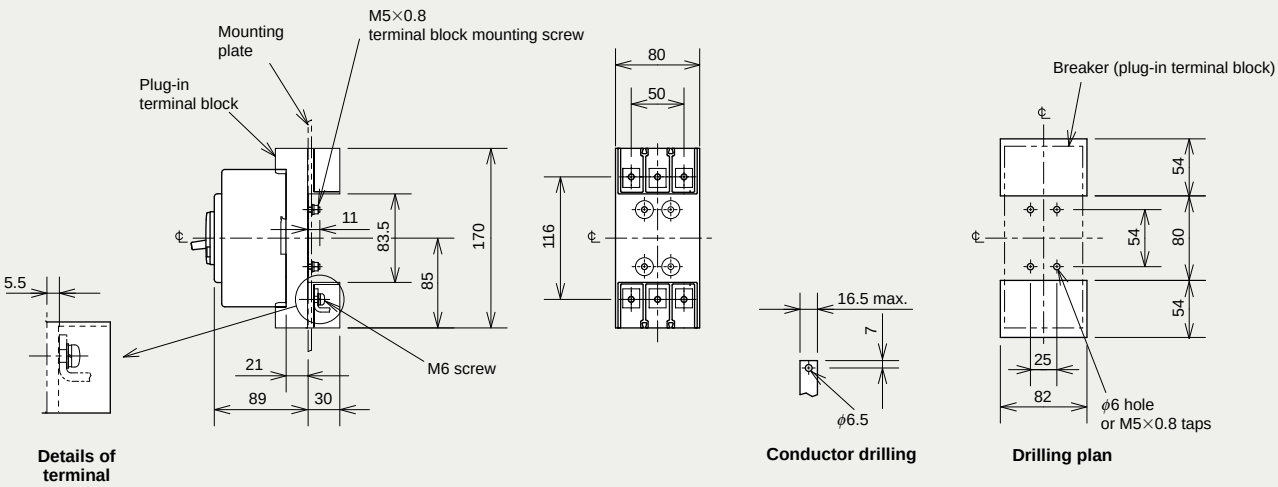

Remark: 1. 2-pole models are 3-pole models with the central pole removed.

NV125-CV NV125-SV NV125-HV

NV125-SV

Model				NV125-CV	NV125-SV		NV125-HV	
Rated current In (A)				(60) 63 (75) 80 100 125	(15) 16 20 30 32 40 50 (60) 63 (75) 80 100 125 (*2)		(15) 16 20 (30) 32 40 50 (60) 63 75 80 100 125 (*2)	
Number of poles				3	3	4	3	4
Phase line				3ϕ3W, 1ϕ2W	3ϕ3W, 1ϕ2W	3ϕ4W	3ϕ3W, 1ϕ2W	3ϕ4W
Rated operational voltage Ue (V)			AC	100-440	100-440	200-440	100-440	200-440
High-speed type	Rated current sensitivity (mA)			(15) 30 100/200/500 selectable	30 100/200/500 selectable		(30) 100/200/500 selectable	
	Max operating time (s)		at IΔn	0.1	0.1		0.1	
			at 5IΔn	0.04	0.04		0.04	
Time-delay type	Rated current sensitivity (mA)			(100/200/500 selectable)	(100/200/500 selectable)		(100/200/500 selectable)	
	Max operating time (s)			(0.45/1.0/2.0 selectable)	(0.45/1.0/2.0 selectable)		(0.45/1.0/2.0 selectable)	
	Inertial operating time (s) (or more)			(0.1/0.5/1.0)	(0.1/0.5/1.0)		(0.1/0.5/1.0)	
Earth-leakage indication system				Mechanical type (button)	Mechanical type (button)		Mechanical type (button)	
Rated short-circuit breaking capacity (kA)	IEC 60947-2 (Icu/Ics)	AC	440V	10/5	25/25		50/38	
			415V	10/5	30/30		50/38	
			400V	10/5	30/30		50/38	
			230V	30/15	50/50		100/75	
			200V	30/15	50/50		100/75	
			100V	30/15	50/50	–	100/75	–
Standard attached parts (Front connection)				Mounting screw: M4×0.7×55 (3P: 2pcs, 4P: 4pcs) (*1) Insulation barrier: (3P: 2pcs, 4P: 3pcs)				

Notes *1 Attached to NV125-SV and NV125-HV.
*2 In case of time delay type, rated current is produced with 20 amp. or more.

Operating Characteristics

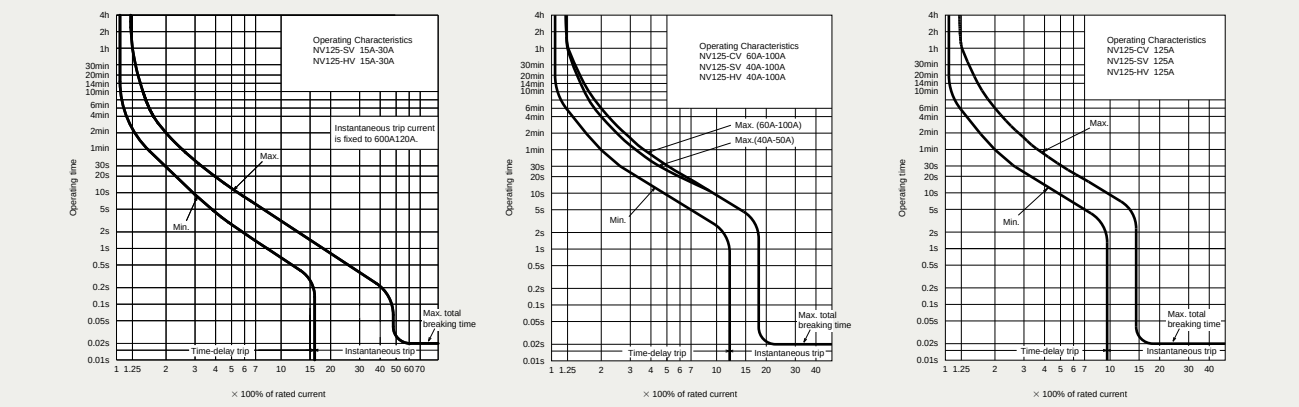

Earth leakage Tripping Characteristics

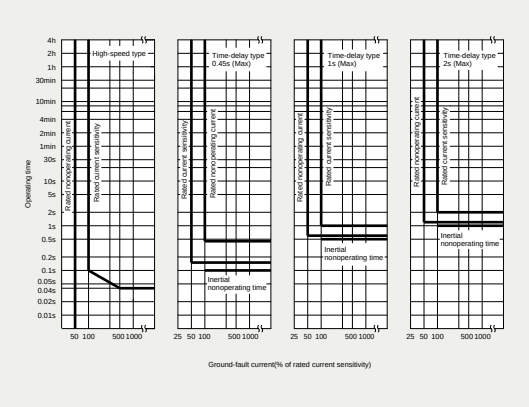

Internal Accessories

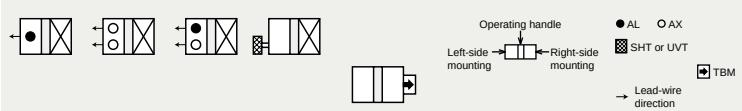

Temperature Compensation Curve

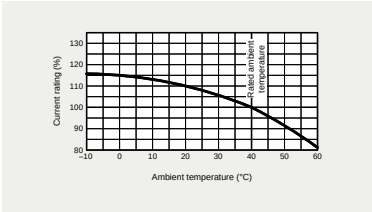

Internal Wiring Diagram

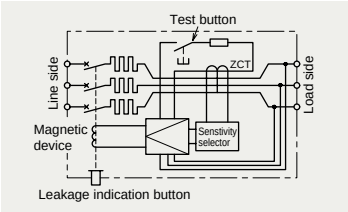

External Accessories

Accessories		Type name
Operating handle	F	F-1SV
	V	V-1SV
Handle lock device	LC	LC-05SV
	HL (*1)	HLF-05SV
		HLN-05SV
	HL-S	HLS-05SV

Notes *1 HLF types are used for OFF lock and HLN types for ON lock.
*2 Specify the working voltage.

Accessories				Type name
Mechanical interlock		MI	3P	MI-05SV3
			4P	MI-1SV4
Terminal cover	Small	TC-S		TCS-1SV3
	Large	TC-L	3P	TCL-1SV3
			4P	TCL-1SV4
	Skeleton	TTC		TTC-1SV3
	Rear	BTC		BTC-1SV3
	Plug-in	PTC		PTC-1SV3
Electrical operation device				(*2)

Outline Drawing

Front connection

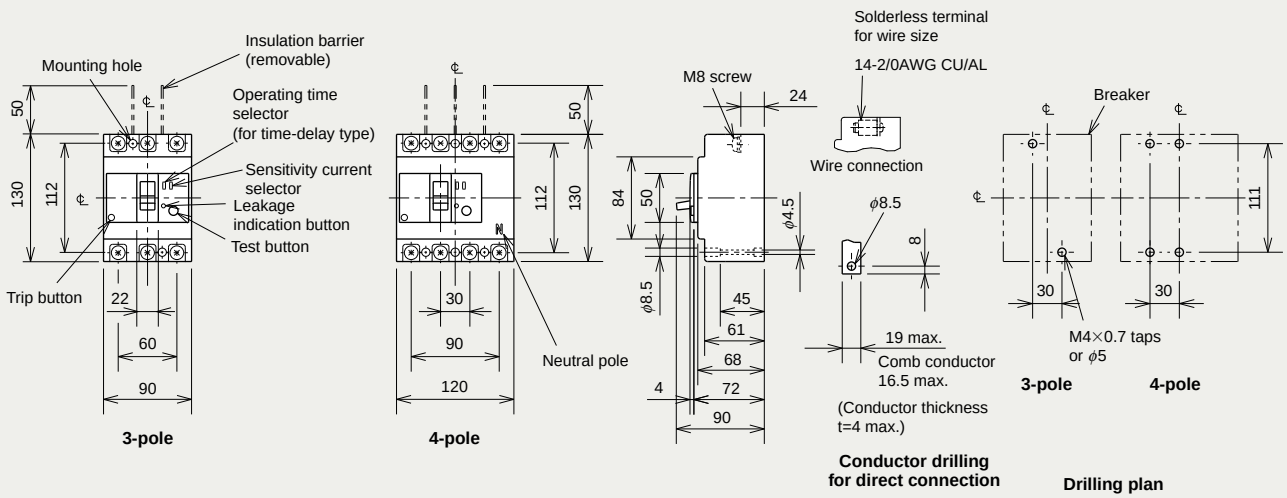

Rear connection

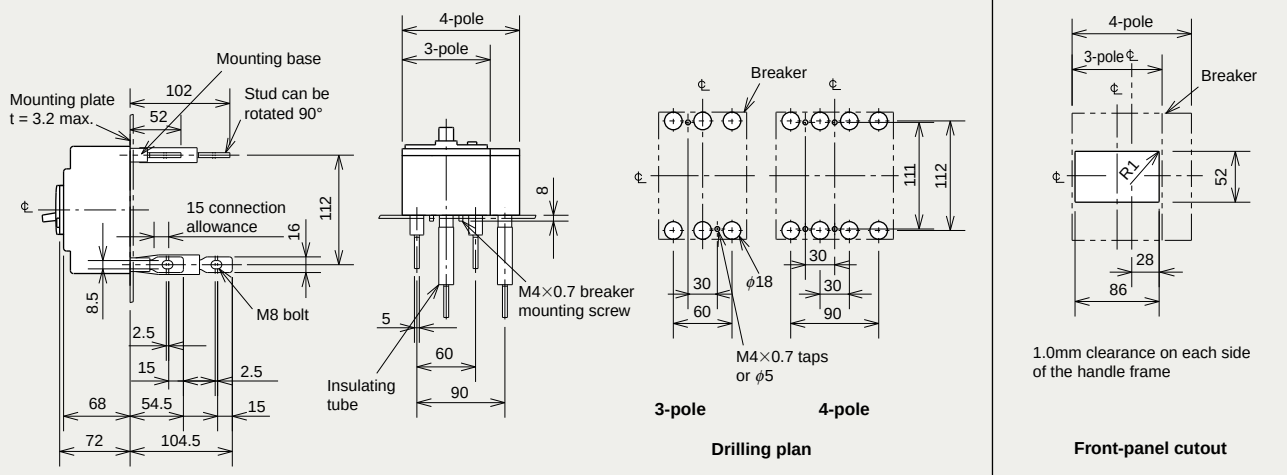

Plug-in

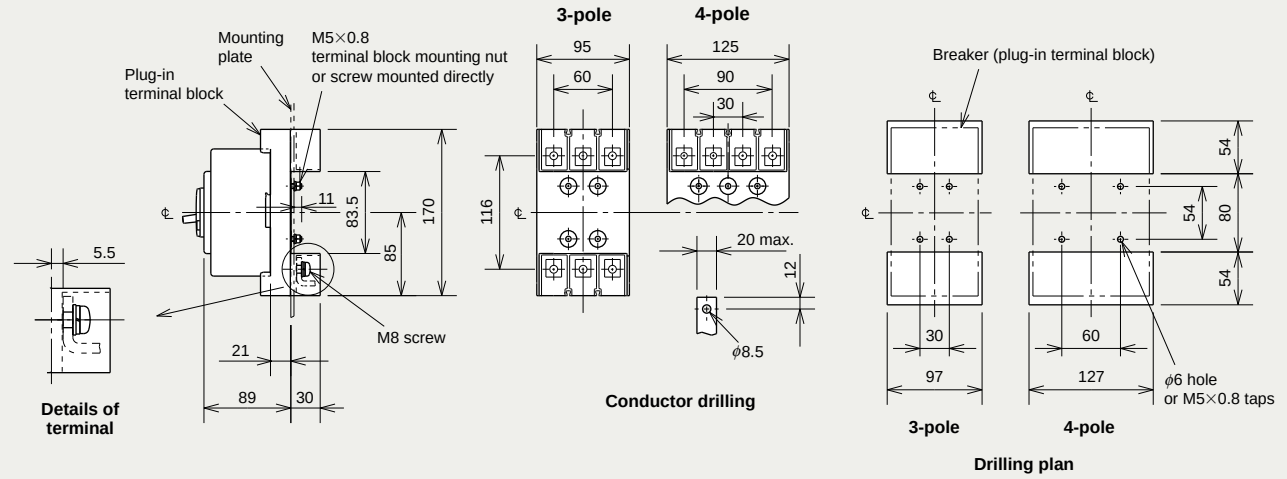

Remark: 1. Only 3-pole models are available for NV125-CV.

NV250-CV NV250-SV NV250-HV

NV250-CV

Model				NV250-CV	NV250-SV		NV250-HV	
Rated current In (A)				125 150 175 200 225 250	125 150 175 200 225 250		125 150 175 200 225 250	
Number of poles				3	3	4	3	4
Phase line				3ϕ3W, 1ϕ2W	3ϕ3W, 1ϕ2W	3ϕ4W	3ϕ3W, 1ϕ2W	3ϕ4W
Rated operational voltage Ue (V)			AC	100-440	100-440	200-440	100-440	200-440
High-speed type	Rated current sensitivity (mA)			30 100/200/500 selectable	(30) 100/200/500 selectable		(30) 100/200/500 selectable	
	Max operating time (s)		at IΔn	0.1	0.1		0.1	
			at 5IΔn	0.04	0.04		0.04	
Time-delay type	Rated current sensitivity (mA)			(100/200/500 selectable)	(100/200/500 selectable)		(100/200/500 selectable)	
	Max operating time (s)			(0.45/1.0/2.0 selectable)	(0.45/1.0/2.0 selectable)		(0.45/1.0/2.0 selectable)	
	Inertial operating time (s) (or more)			(0.1/0.5/1.0)	(0.1/0.5/1.0)		(0.1/0.5/1.0)	
Earth-leakage indication system				Mechanical type (button)	Mechanical type (button)		Mechanical type (button)	
Rated short-circuit breaking capacity (kA)	IEC 60947-2 (Icu/Ics)	AC	440V	15/12	36/36		65/65	
			415V	25/19	36/36		70/70	
			400V	25/19	36/36		75/75	
			230V	36/27	85/85		100/100	
			200V	36/27	85/85		100/100	
			100V	36/27	85/85	–	100/100	
Standard attached parts (Front connection)				Mounting screw: M4×0.7×55 (3P: 2pcs, 4P: 4pcs) Insulation barrier: (3P: 4pcs, 4P: 6pcs)				

Operating Characteristics

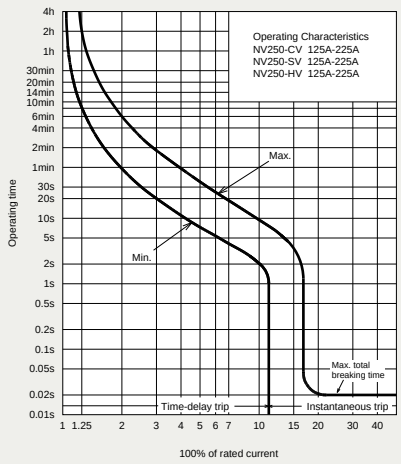

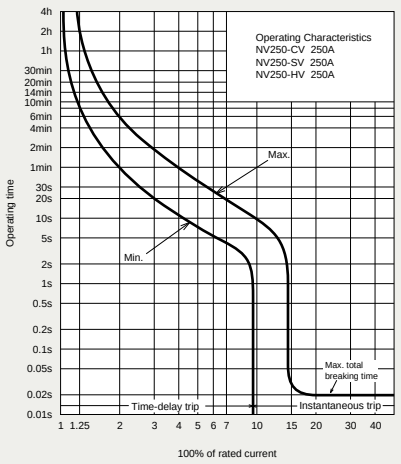

Earth leakage Tripping Characteristics

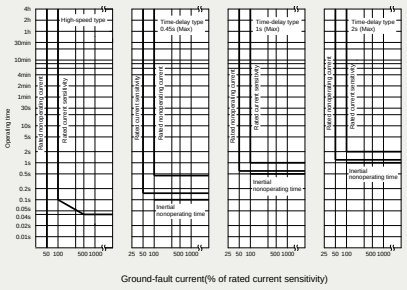

Internal Accessories

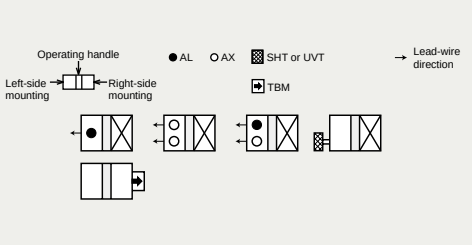

Temperature Compensation Curve

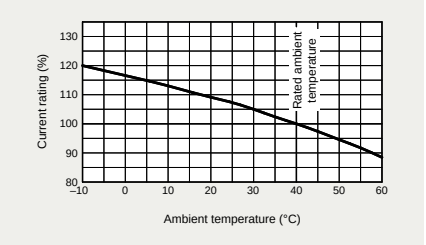

Internal Wiring Diagram

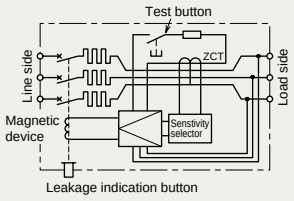

External Accessories

Accessories		Type name
Operating handle	F	F-2SV
	V	V-2SV
Handle lock device	LC	LC-05SV
	HL (*1)	HLF-05SV
		HLN-05SV
	HL-S	HLS-2SV

Notes *1 HLF types are used for OFF lock and HLN types for ON lock.
*2 Specify the working voltage.

Accessories				Type name
Mechanical interlock		MI	3P	MI-05SV3
			4P	MI-2SV4
Terminal cover	Small	TC-S	3P	TCS-2SV3
	Large	TC-L	3P	TCL-2SV3
				TCL-2SV3L
			4P	TCL-2SV4
	Skeleton	TTC	3P	TTC-2SV3
	Rear	BTC	3P	BTC-2SV3
	Plug-in	PTC	3P	PTC-2SV3
Electrical operation device				(*2)

Outline Drawing

Front connection

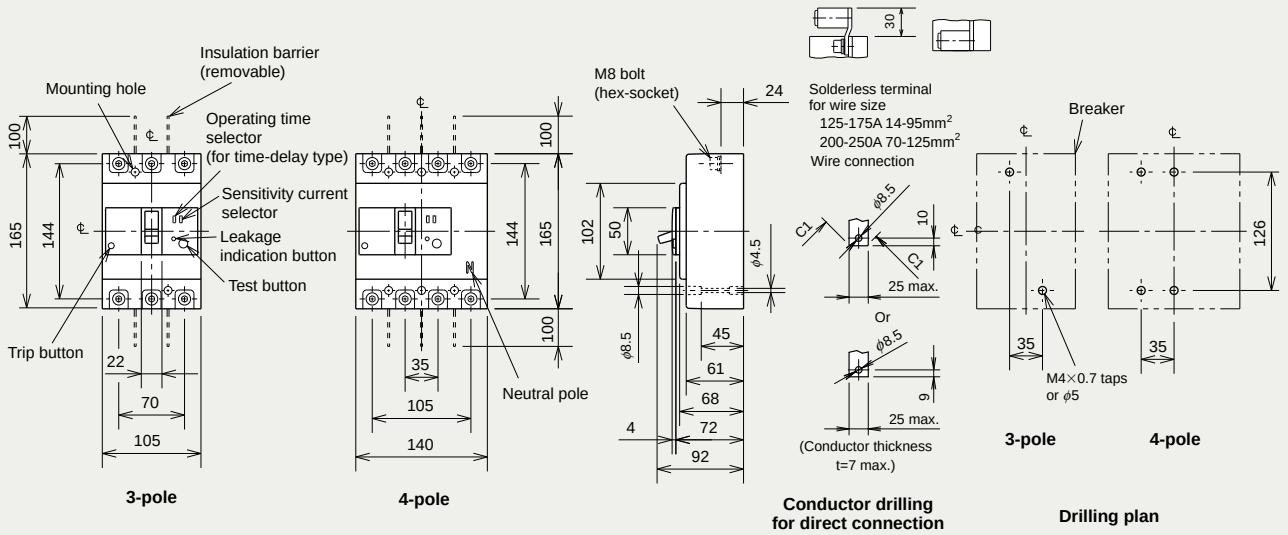

Rear connection

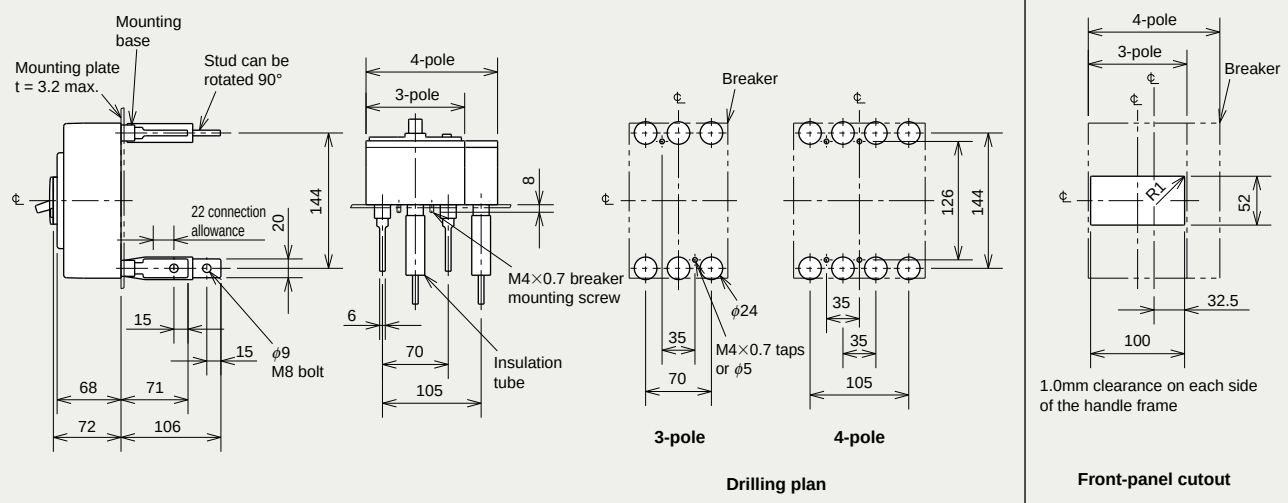

Plug-in

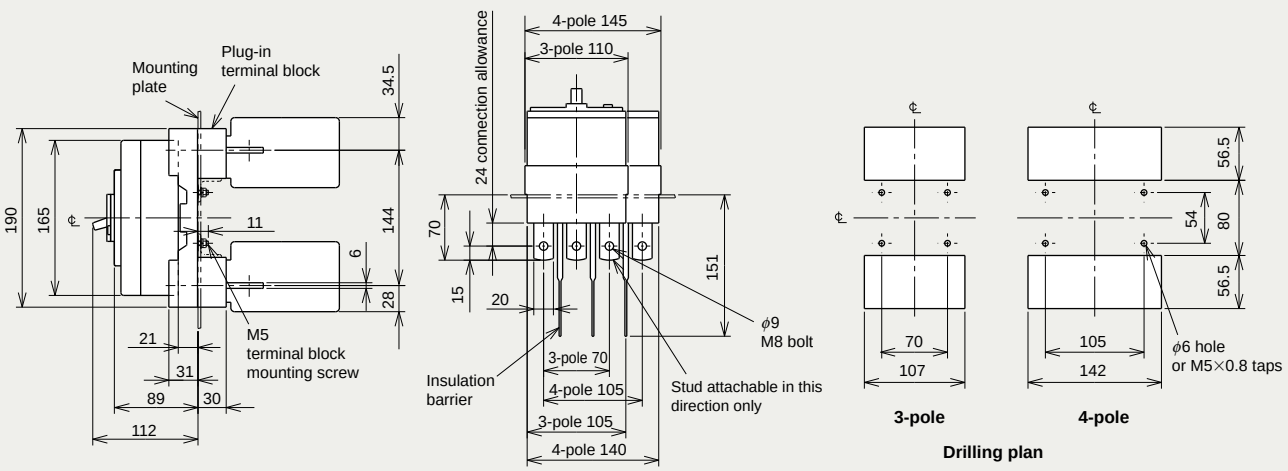

Remark: 1. Only 3-pole models are available for the model of NV250-CV.

NV125-SEV NV125-HEV NV250-SEV NV250-HEV

NV250-SEV

Model				NV125-SEV		NV125-HEV		NV250-SEV	NV250-HEV
Rated current In (A)				125		125		250	250
Current setting Ir (A)				63-125		63-125		125-250	125-250
Number of poles				3	4	3	4	3	3
Phase line type				3φ3W, 1φ2W	3φ4W	3φ3W, 1φ2W	3φ4W	3φ3W, 1φ2W	3φ3W, 1φ2W
Rated operational voltage Ui			V	440		440		440	440
Rated operational voltage Ue (V)			AC	100-440		100-440		100-440	100-440
High-speed type	Rated current sensitivity (mA)			(30) 100/200/500 selectable		(30) 100/200/500 selectable		(30) 100/200/500 selectable	(30) 100/200/500 selectable
	Max operating time (s)		at IΔn	0.1		0.1		0.1	0.1
			at 5IΔn	0.04		0.04		0.04	0.04
Time-delay type	Rated current sensitivity (mA)			(100/200/500 selectable)		(100/200/500 selectable)		(100/200/500 selectable)	(100/200/500 selectable)
	Max operating time (s)			(0.45/1.0/2.0 selectable)		(0.45/1.0/2.0 selectable)		(0.45/1.0/2.0 selectable)	(0.45/1.0/2.0 selectable)
	Inertial operating time (s) (or more)			(0.1/0.5/1.0)		(0.1/0.5/1.0)		(0.1/0.5/1.0)	(0.1/0.5/1.0)
Earth-leakage indication system				Mechanical type (button)		Mechanical type (button)		Mechanical type (button)	Mechanical type (button)
Rated short-circuit breaking capacity (kA)	IEC 60947-2 (Icu/Ics)	AC	440V	36/36		65/65		36/36	65/65
			415V	36/36		70/70		36/36	70/70
			400V	36/36		75/75		36/36	75/75
			230V	85/85		100/100		85/85	100/100
			200V	85/85		100/100		85/85	100/100
			100V	85/85		100/100		85/85	100/100
Standard attached parts (Front connection)				Mounting screw: M4×0.7×55 (3P: 2pcs, 4P: 4pcs) Insulation barrier: (3P: 4pcs, 4P: 6pcs)					

Operating Characteristics

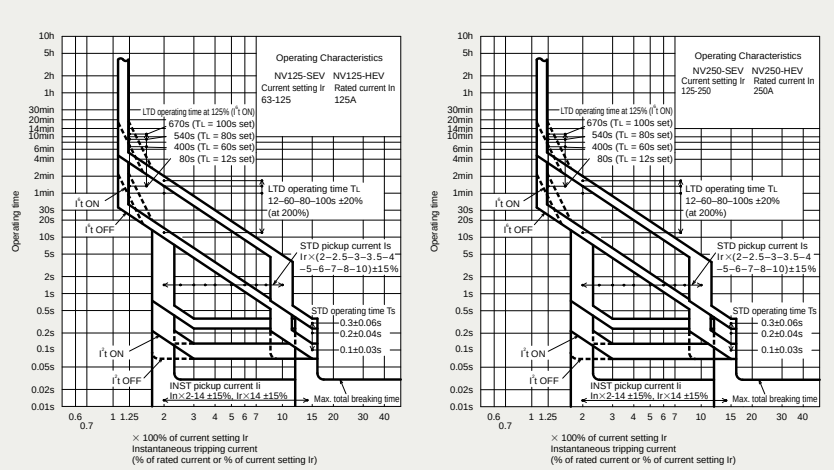

Earth leakage Tripping Characteristics

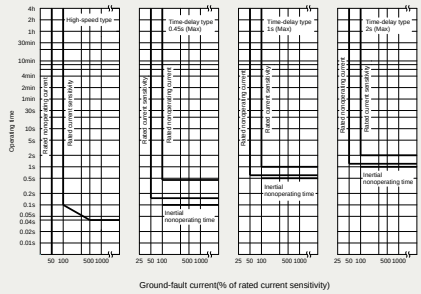

Internal Accessories

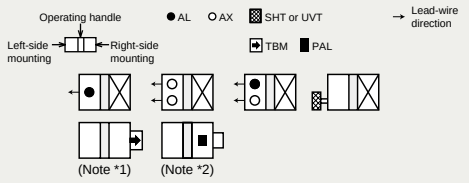

Notes *1 For the 24VDC TBM only instruct us of a control voltage. (The standard shared voltage is 100-240VAC/100-240VDC.)
*2 SLT-equipped is standard. Control voltage (100-200VAC) is necessary.

Current Reducing Curve

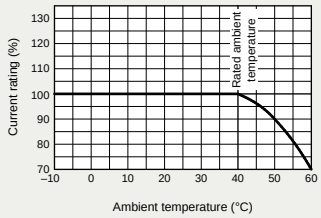

The rated current does not have thermal characteristics. Reduce the current as shown in the curve on the left chart if the ambient temperature exceeds 40°C.

Internal Wiring Diagram

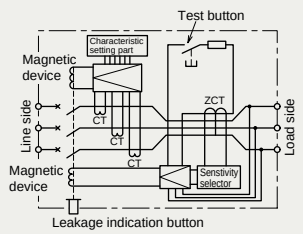

External Accessories

Accessories		Type name
Operating handle	F	F-2SV
	V	V-2SV
Handle lock device	LC	LC-05SV
	HL (*1)	HLF-05SV
		HLN-05SV
	HL-S	HLS-2SV

Notes *1 HLF types are used for OFF lock and HLN types for ON lock.
*2 Specify the working voltage.

Accessories				Type name
Mechanical interlock		MI	3P	MI-05SV3
			4P	MI-2SV4
Terminal cover	Small	TC-S	3P	TCS-2SV3
	Large	TC-L	3P	TCL-2SV3
				TCL-2SV3L
			4P	TCL-2SV4
	Skeleton	TTC	3P	TTC-2SV3
	Rear	BTC	3P	BTC-2SV3
	Plug-in	PTC	3P	PTC-2SV3
Electrical operation device				(*2)

Outline Drawing

Front connection

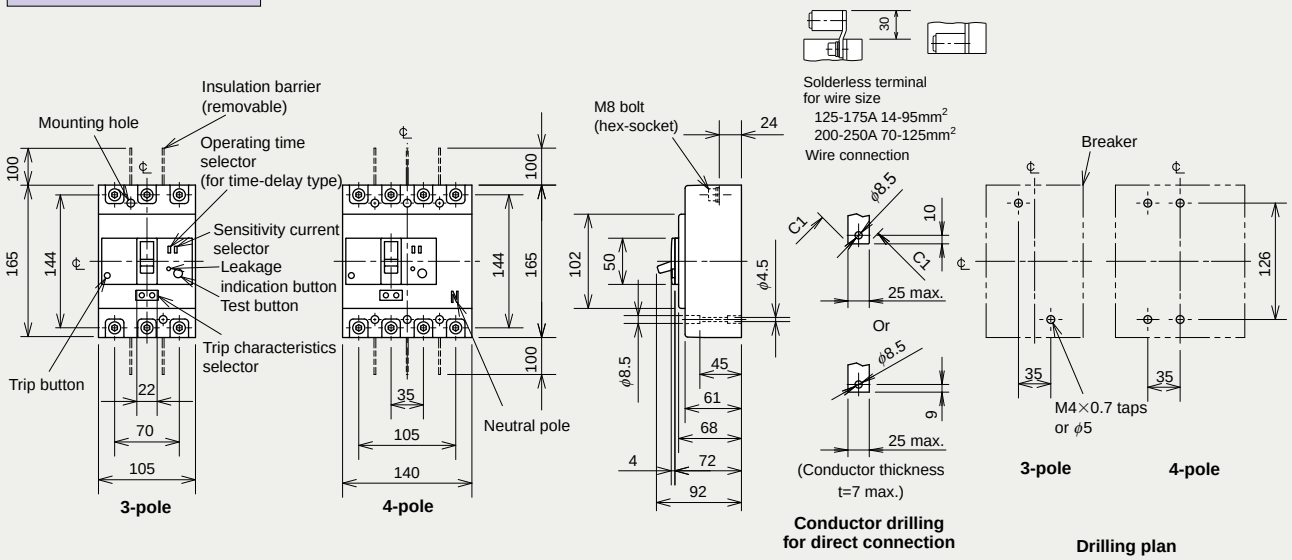

Rear connection

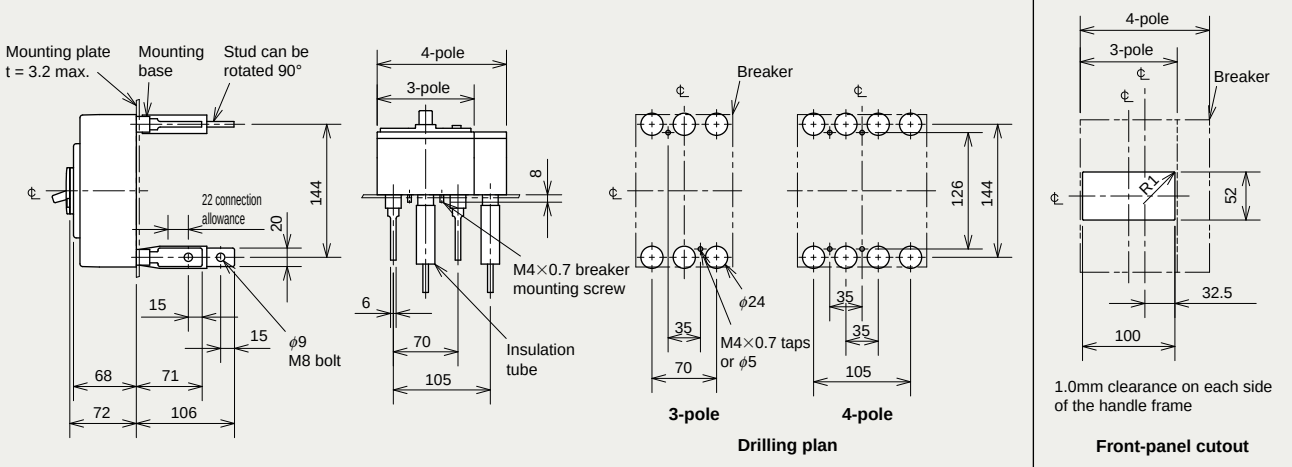

Plug-in

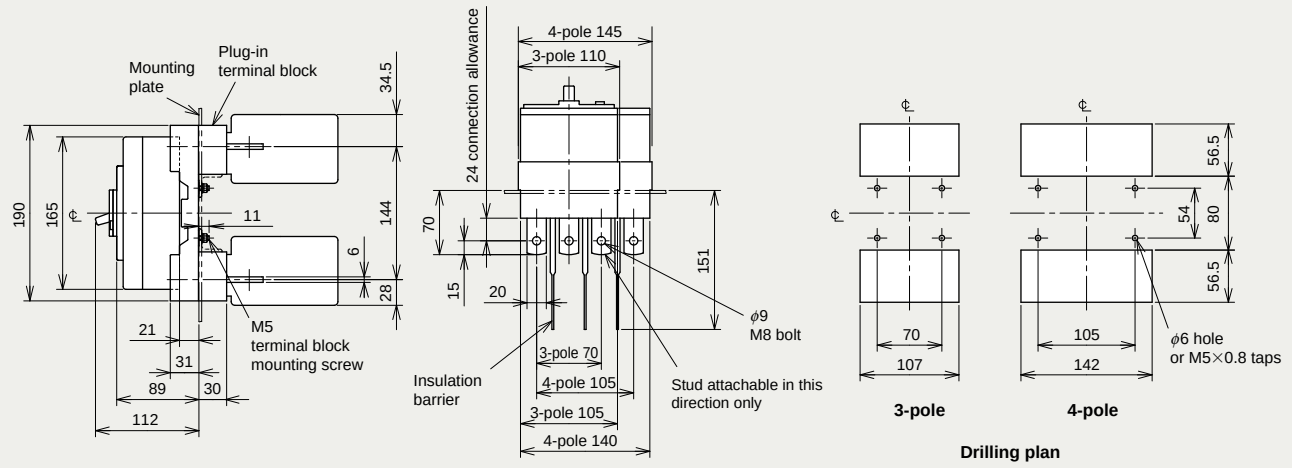

Remark: 1. Only 3-pole models are available for the model of NV250-SEV and NV250-HEV.

NV400-CW
NV400-SW

NV400-SW

Model			NV400-CW	NV400-SW
Number of poles			3	
Rated operational voltage Ue (V AC) (*1)			100-440 Multi-voltage type	
Rated current In (A)			250 300 350 400	
High-speed type	Rated current sensitivity IΔn (mA)		(30) 100 · 200 · 500 Selectable	
	Max. operating time at 5IΔn (s)		0.04	
Time-delay type	Rated current sensitivity IΔn (mA)		(100 · 200 · 500 Selectable)	
	Max. operating time at 2IΔn (s)		(0.45 · 1.0 · 2.0 Selectable)	
	Inertial non-operating time at 2IΔn (s)		(0.1 · 0.5 · 1.0)	
Earth-leakage indication system			Button	
Rated short-circuit breaking capacity (kA) IEC 60947-2 (Icu/Ics) EN 60947-2	AC	440V	25/13	42/42
		400V	36/18	45/45
		230V	50/25	85/85
Standard attached parts (Front connection)			Mounting screw: M6×60 (4pcs) Insulation barrier: (4pcs)	

Note *1 Rated operational voltage of time-delay type is for 200-440V.

Operating Characteristics

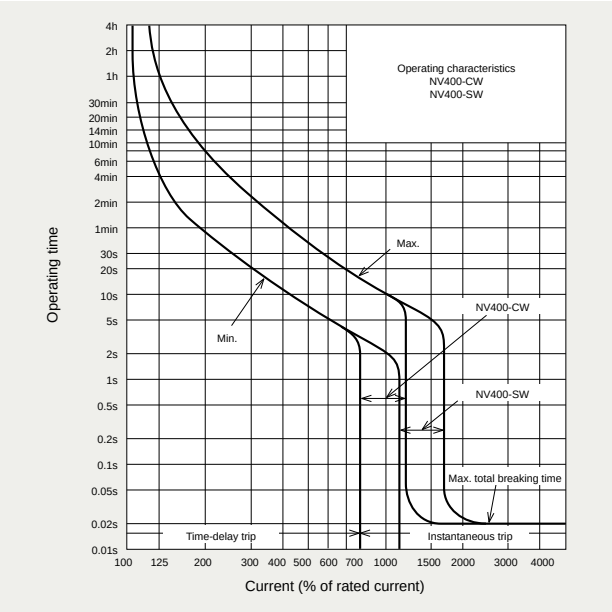

Earth Leakage Tripping Characteristics

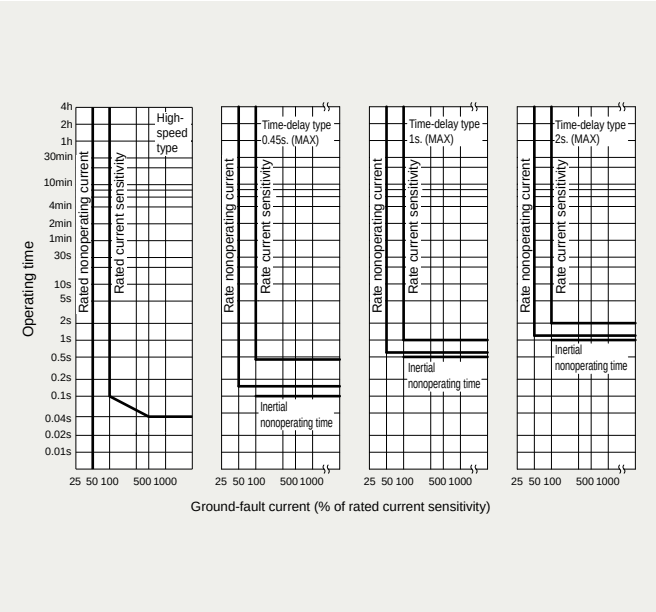

Internal Accessories

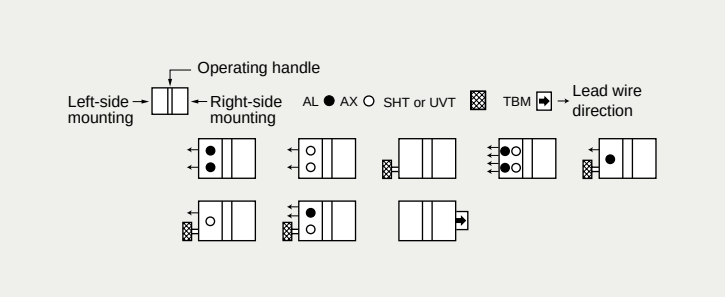

Temperature Compensation Curve

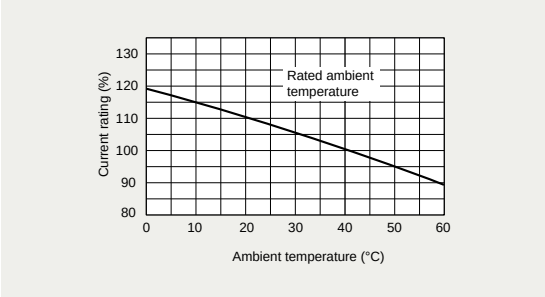

External Accessories

Accessories		Type name
Operating handle	F	F-4S
	V	V-4S
Mechanical interlock	MI	MI-4SW3

Note *1 Specify the operation method and voltage. Order in combination with the breaker unit.

Accessories			Type name
Auxiliary handle		HT	HT-4CW, HT-4SW
Terminal cover	Large	TC-L	TCL-4SW3
	Skeleton	TTC	TTC-4SW3
	Rear	BTC	BTC-4SW3
Handle lock device		HL	HL-4CW, HL-4SW
		HL-S	HLS-4SW
Electrical operation device			(*1)

Internal Wiring Diagram

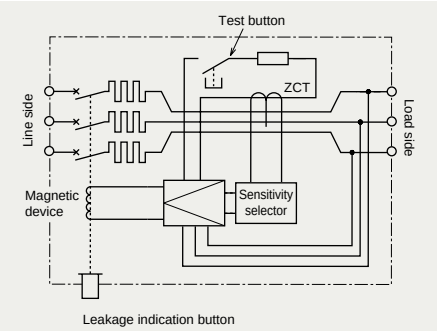

Outline Drawing

Front connection

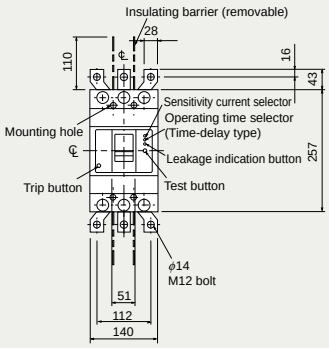

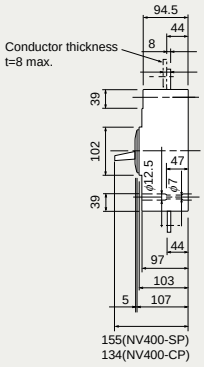

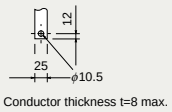

Conductor drilling for direct connection

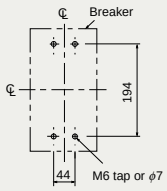

Drilling plan

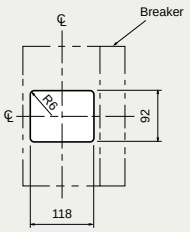

1.0mm clearance on each side of the handle frame.

Front-panel cutout

Rear connection

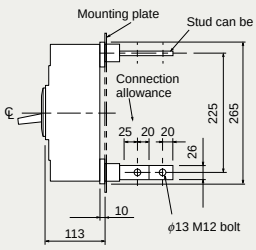

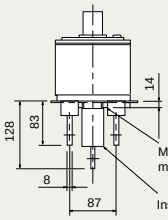

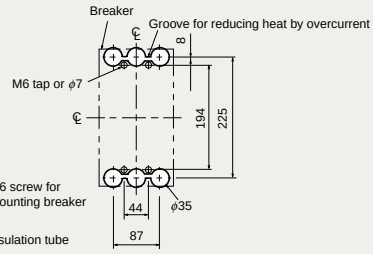

Drilling plan

Boring dimensions for rear connection type barriers (3-pole)

Line side

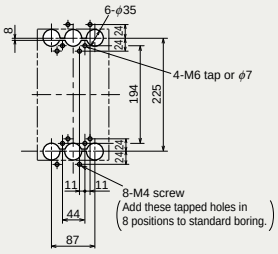

Load side

Note The bore dimensional drawing shows the breaker viewed from the rear.

NV400-SEW
NV400-HEW
NV400-REW

NV400-SEW

Model			NV400-SEW		NV400-HEW		NV400-REW
Number of poles			3	4	3	4	3
Rated operational voltage Ue (V AC) (*1)			100-440 Multi-voltage type				
Rated current In (A)			200-400 adjustable				
High-speed type	Rated current sensitivity IΔn (mA)		(30) 100 · 200 · 500 Selectable				
	Max. operating time at 5IΔn (s)		0.04				
Time-delay type	Rated current sensitivity IΔn (mA)		(100 · 200 · 500 Selectable)				
	Max. operating time at 5IΔn (s)		(0.45 · 1.0 · 2.0 Selectable)				
	Max. inertial non-operating time at 2IΔn (s)		(0.1 · 0.5 · 1.0)				
Earth-leakage indication system			Button				
Rated short-circuit breaking capacity (kA) IEC 60947-2 (Icu/Ics) EN 60947-2	AC	440V	42/42		65/65		125/63
		400V	50/50		70/70		125/63
		230V	85/85		100/100		150/75
Standard attached parts (Front connection)			Mounting screw: M6×72 (4pcs) Insulation barrier: (3P: 4pcs, 4P: 6pcs)				

Note *1 Rated operational voltage of time-delay type is for 200-440V.

Operating Characteristics

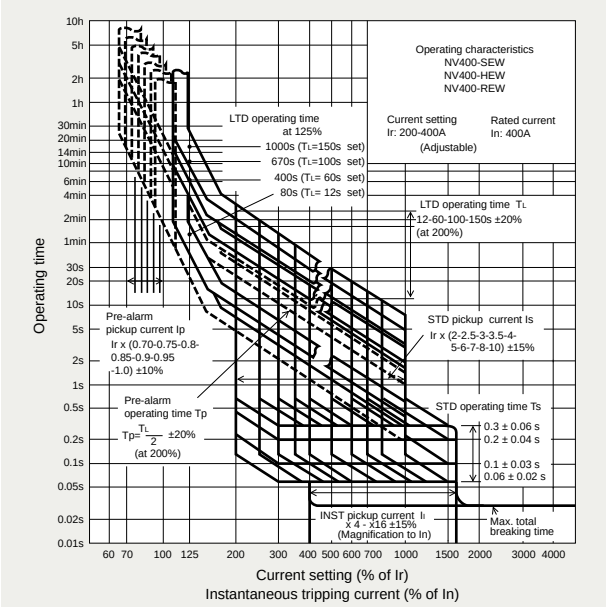

Earth Leakage Tripping Characteristics

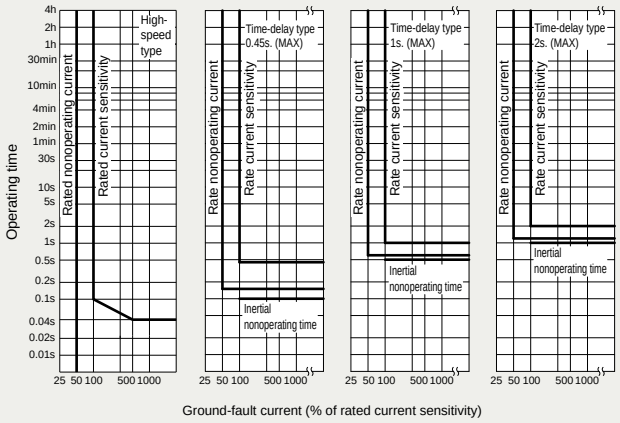

Internal Accessories

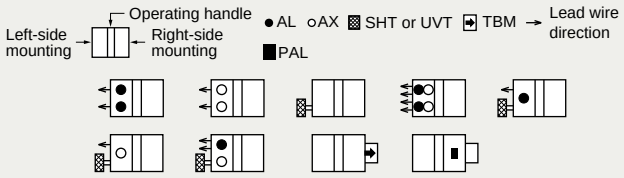

Remarks: 1. Instead of TBM, pre-alarm module (PAL) can be attached.

Current Reducing Curve

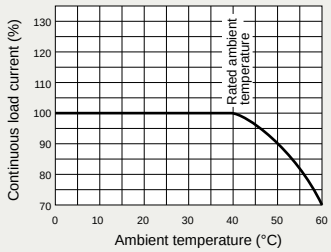

External Accessories

Accessories			Type name
Operating handle	F		F-4S
	V		V-4S
Mechanical interlock	MI	3P	MI-4SW3
		4P	MI-4SW4

Accessories				Type name
Auxiliary handle		HT		HT-4SW
Terminal cover	Large	TC-L	3P	TCL-4SW3 (*1)
			4P	TCL-4SW4 (*1)
	Skeleton	TTC	3P	TTC-4SW3
			4P	TTC-4SW4
	Rear	BTC	3P	BTC-4SW3 (*2)
			4P	BTC-4SW4
Handle lock device		HL		HL-4SW
		HL-S		HLS-4SW
Electrical operation device		NVM	3P / 4P	(*3)

Notes *1 This is for NV400-SEW.
*2 This is for NV400-SEW. For rear terminal cover of NV400-HEW/REW, use PTC-4SW3.
*3 Specify the operation method and voltage. Order in combination with the breaker unit.

Internal Wiring Diagram

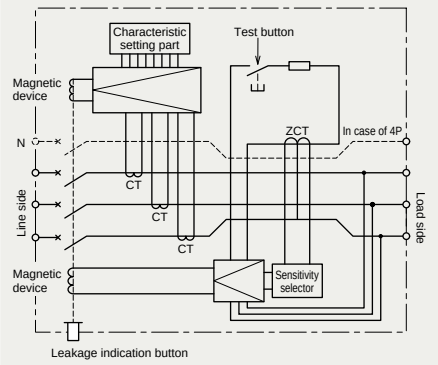

Outline Drawing

Front connection

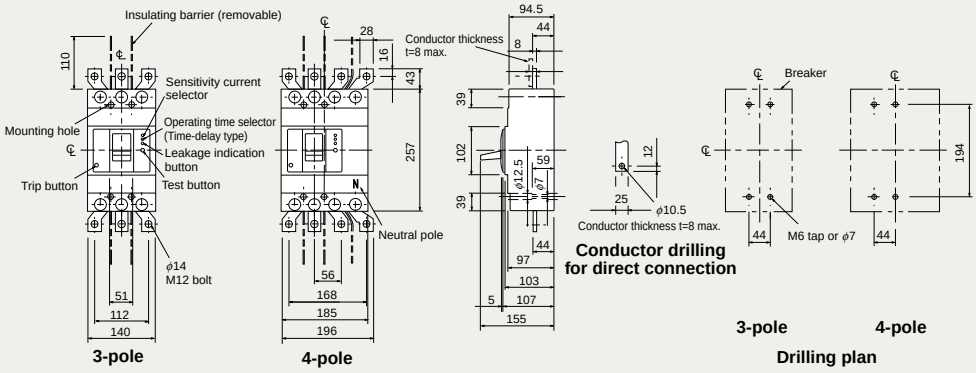

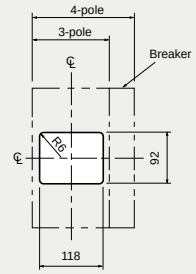

1.0mm clearance on each side of the handle frame.

Front-panel cutout

Rear connection

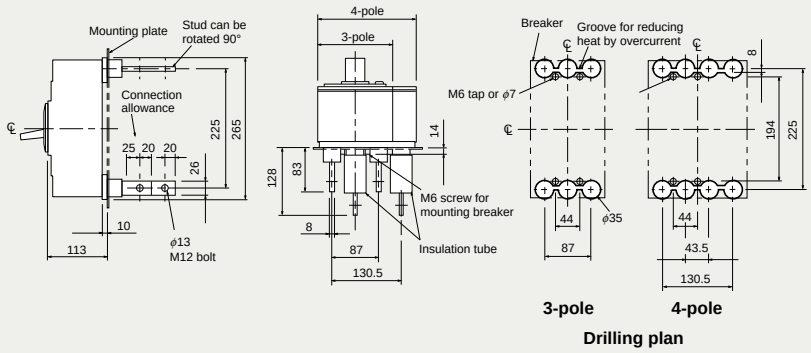

Boring dimensions for rear connection type barriers (3-pole)

Line side

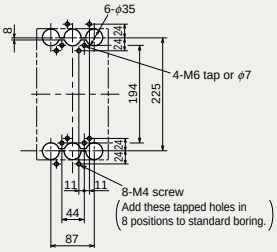

Load side

Note The bore dimensional drawing shows the breaker viewed from the rear.

NV630-CW
NV630-SW

NV630-SW

Model			NV630-CW	NV630-SW
Number of poles			3	
Rated operational voltage Ue (V AC)			100-440 Multi-voltage type	
Rated current In (A)			500 600 630	
High-speed type	Rated current sensitivity IΔn (mA)		–	
	Max. operating time at 5IΔn (s)		–	
Time-delay type	Rated current sensitivity IΔn (mA)		100 · 200 · 500 Selectable	
	Max. operating time at 5IΔn (s)		0.45 · 1.0 · 2.0 Selectable	
	Max. inertial non-operating time at 2IΔn (s)		0.1 · 0.5 · 1.0	
Earth-leakage indication system			Button	
Rated short-circuit breaking capacity (kA) IEC 60947-2 (Icu/Ics) EN 60947-2	AC	440V	36/18	42/42
		400V	36/18	50/50
		230V	50/25	85/85
Standard attached parts (Front connection)			Mounting screw: M6×72 (4pcs) Insulation barrier: (4pcs)	

Operating Characteristics

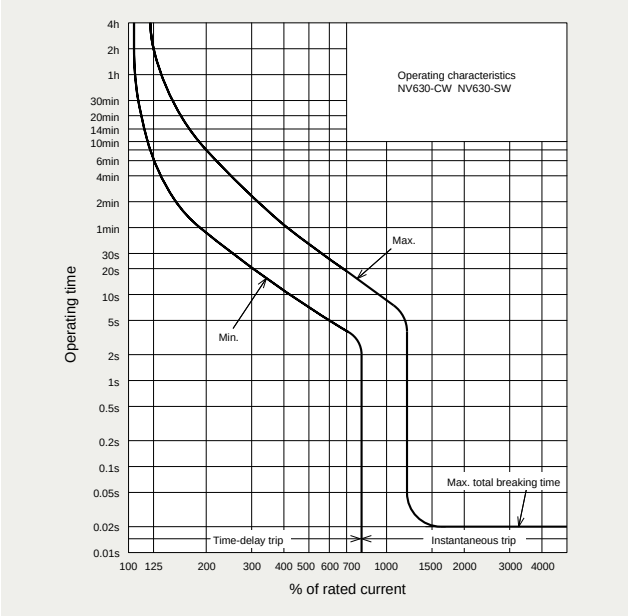

Earth Leakage Tripping Characteristics

Internal Accessories

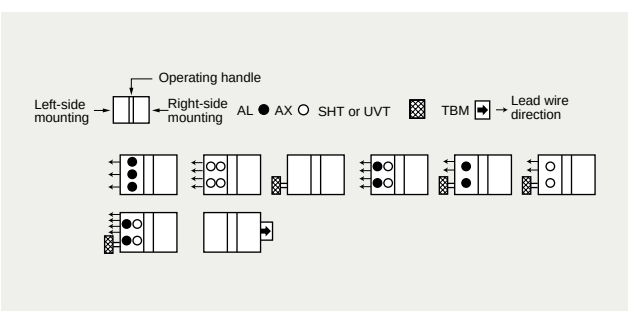

Temperature Compensation Curve

External Accessories

Accessories		Type name
Operating handle	F	F-4S
	V	V-4S
Mechanical interlock	MI	MI-4SW3

Note *1 Specify the operation method and voltage. Order in combination with the breaker unit.

Accessories			Type name
Auxiliary handle		HT	HT-4SW
Terminal cover	Large	TC-L	TCL-4SW3
	Skeleton	TTC	TTC-4SW3
	Rear	BTC	BTC-4SW3
Handle lock device		HL	HL-4SW
		HL-S	HLS-4SW
Electrical operation device			(*1)

Internal Wiring Diagram

Outline Drawing

Front connection

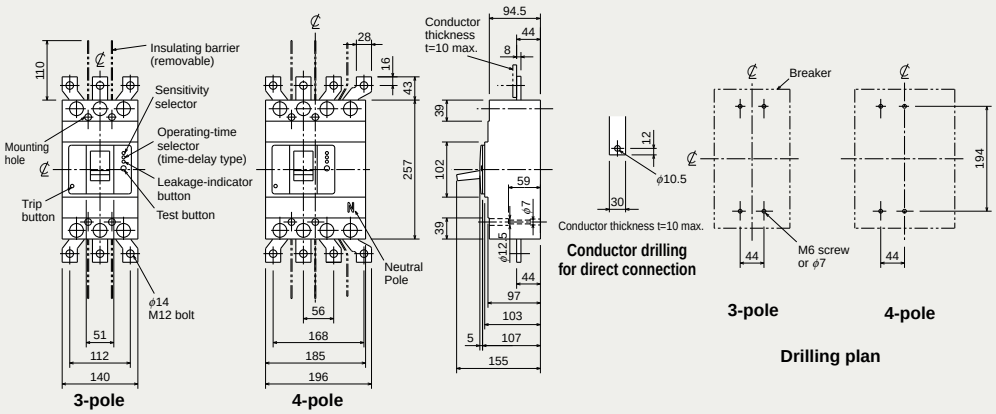

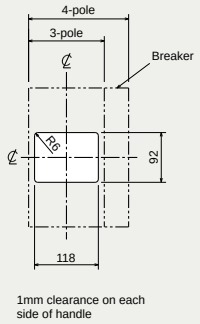

Rear connection

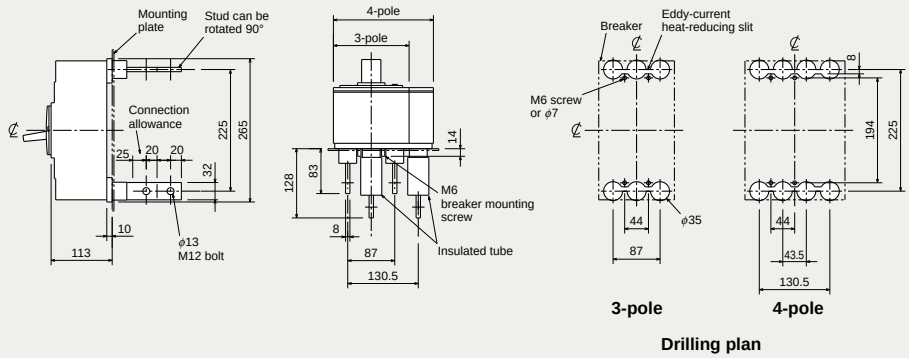

Boring dimensions for rear connection type barriers (3-pole)

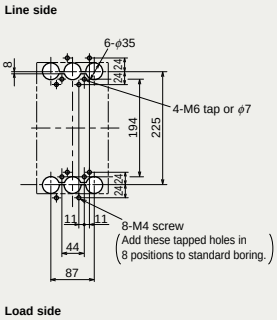

Note The bore dimensional drawing shows the breaker viewed from the rear.

NV630-SEW
NV630-HEW

NV630-SEW

Model			NV630-SEW		NV630-HEW
Number of poles			3	4	3
Rated operational voltage Ue (V AC) (*1)			100-440 Multi-voltage type		
Rated current In (A)			300-630 adjustable		
High-speed type	Rated current sensitivity IΔn (mA)		–		
	Max. operating time at 5IΔn (s)		–		
Time-delay type	Rated current sensitivity IΔn (mA)		(100 · 200 · 500 Selectable)		
	Max. operating time at 5IΔn (s)		(0.45 · 1.0 · 2.0 Selectable)		
	Max. inertial non-operating time at 2IΔn (s)		(0.1 · 0.5 · 1.0)		
Earth-leakage indication system			Button		
Rated short-circuit breaking capacity (kA) IEC 60947-2 (Icu/Ics) EN 60947-2	AC	440V	42/42		65/65
		400V	50/50		70/70
		230V	85/85		100/100
Standard attached parts (Front connection)			Mounting screw: M6×72 (4pcs) Insulation barrier: (3P: 4pcs, 4P: 6pcs)		

Note *1 Rated operational voltage of time-delay type is for 200-440V.

Operating Characteristics

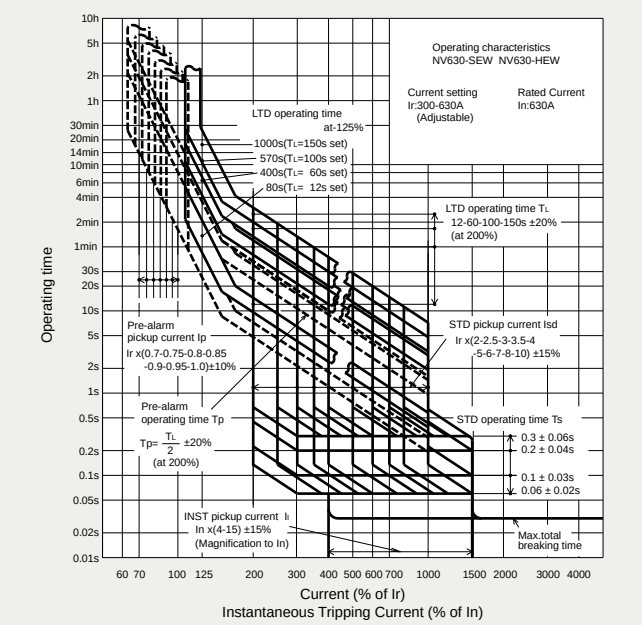

Earth Leakage Tripping Characteristics

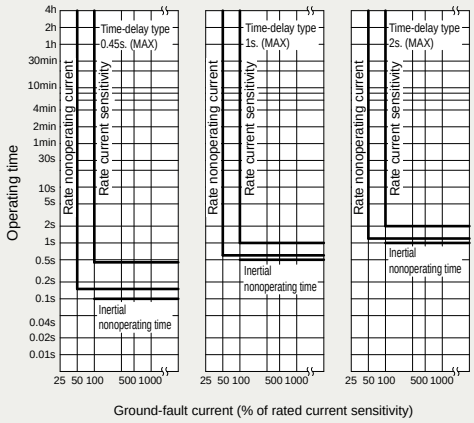

Internal Accessories

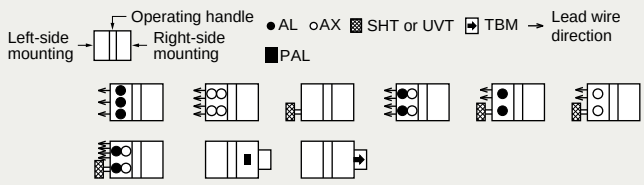

Remarks: 1. Instead of TBM, pre-alarm module (PAL) can be attached.

Current Reducing Curve

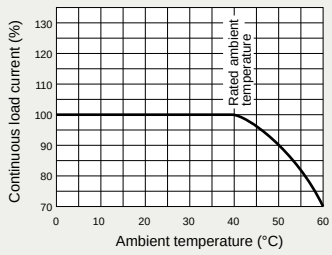

External Accessories

Accessories			Type name
Operating handle	F		F-4S
	V		V-4S
Mechanical interlock	MI	3P	MI-4SW3
		4P	MI-4SW4

Notes *1 This is for NV630-SEW.
*2 This is for NV630-SEW. For rear terminal cover of NV630-HEW, use PTC-4SW3.
*3 Specify the operation method and voltage. Order in combination with the breaker unit.

Accessories				Type name
Auxiliary handle		HT		HT-4SW
Terminal cover	Large	TC-L	3P	TCL-4SW3 (*1)
			4P	TCL-4SW4 (*1)
	Skeleton	TTC	3P	TTC-4SW3
			4P	TTC-4SW4
	Rear	BTC	3P	BTC-4SW3 (*2)
			4P	BTC-4SW4
Handle lock device		HL		HL-4SW
		HL-S		HLS-4SW
Electrical operation device		NVM	3P	(*3)
			4P	

Internal Wiring Diagram

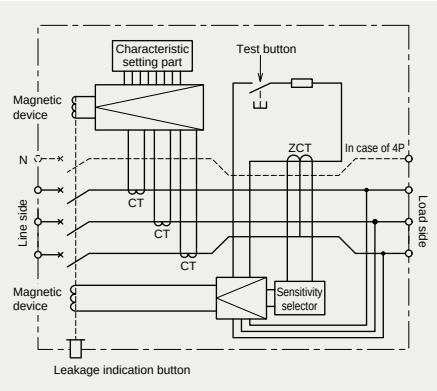

Outline Drawing

Front connection

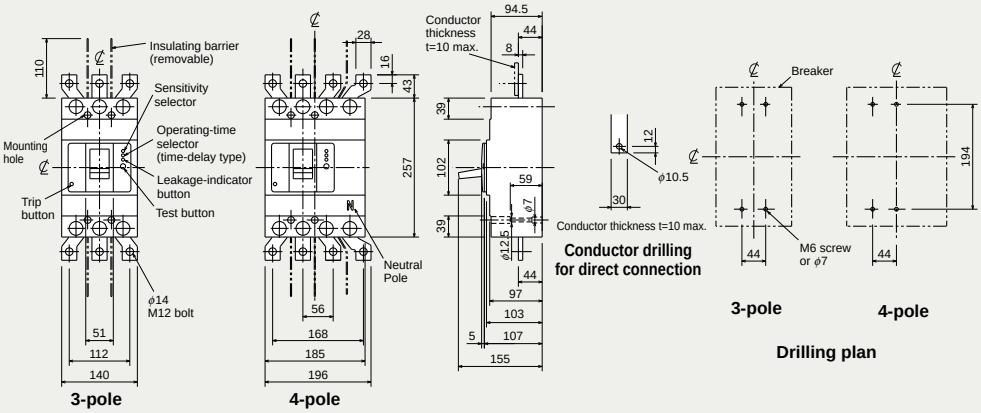

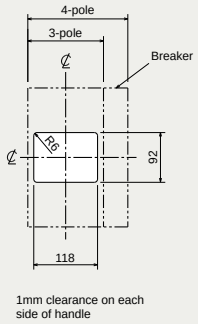

Front-plate cutout

Rear connection

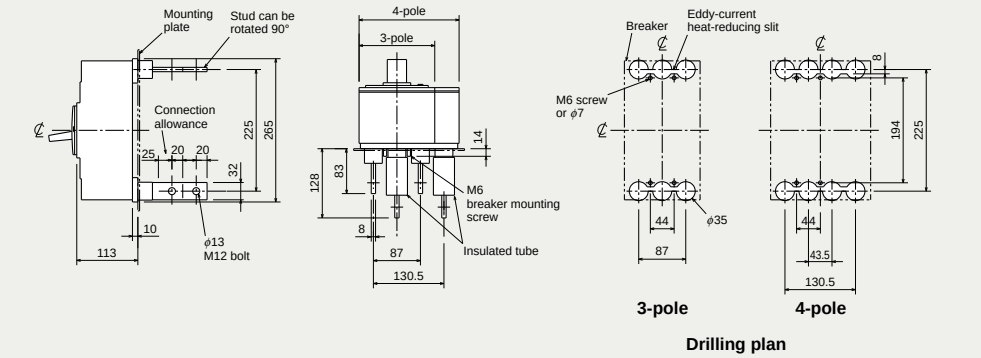

Boring dimensions for rear connection type barriers (3-pole)

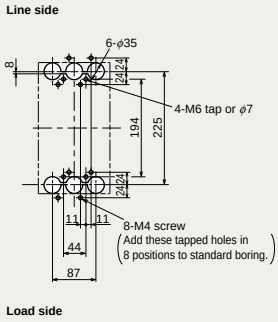

Note The bore dimensional drawing shows the breaker viewed from the rear.

NV800-SEW
NV800-HEW

NV800-SEW

Model			NV800-SEW	NV800-HEW
Number of poles			3	
Rated operational voltage Ue (V AC)			100-440 Multi-voltage type	
Rated current In (A)			400-800 adjustable	
High-speed type	Rated current sensitivity IΔn (mA)		–	
	Max. operating time at 5IΔn (s)		–	
Time-delay type	Rated current sensitivity IΔn (mA)		100 · 200 · 500 Selectable	
	Max. operating time at 5IΔn (s)		0.45 · 1.0 · 2.0 Selectable	
	Max. inertial non-operating time at 2IΔn (s)		0.1 · 0.5 · 1.0	
Earth-leakage indication system			Button	
Rated short-circuit breaking capacity (kA) IEC 60947-2 (Icu/Ics) EN 60947-2	AC	440V	42/42	65/65
		400V	50/50	70/70
		230V	85/85	100/100
Standard attached parts (Front connection)			Mounting screw: M6×35 (4pcs) Insulation barrier: (2pcs)	

Operating Characteristics

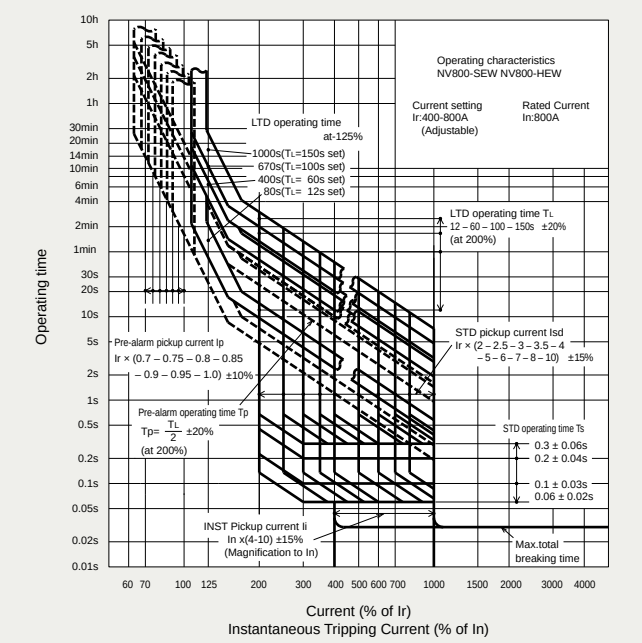

Earth Leakage Tripping Characteristics

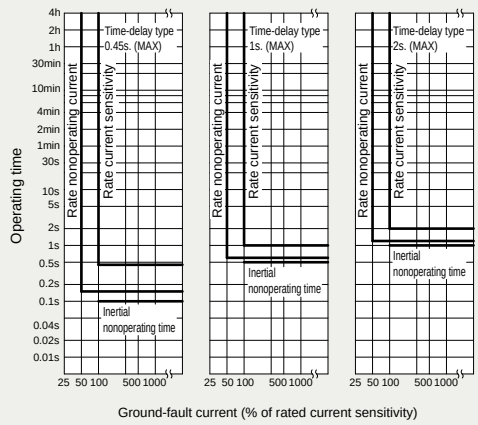

Internal Accessories

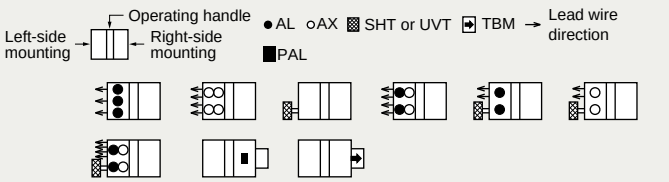

Remarks: 1. Instead of TBM, pre-alarm module (PAL) or trip indicator (TI) can be attached.

Current Reducing Curve

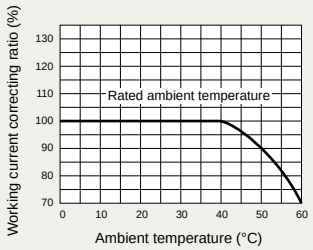

External Accessories

Accessories		Type name
Operating handle	F	F-8S
	V	V-8S
Mechanical interlock	MI	MI-8SW3

Note *1 Specify the operation method and voltage. Order in combination with the breaker unit.

Accessories			Type name
Auxiliary handle		HT	HT-4SW
Terminal cover	Large	TC-L	TCL-8SW3
	Skeleton	TTC	TTC-8SW3
	Rear	BTC	BTC-8SW3
Handle lock device		HL	HL-4SW
		HL-S	HLS-8SW
Electrical operation device			(*1)

Internal Wiring Diagram

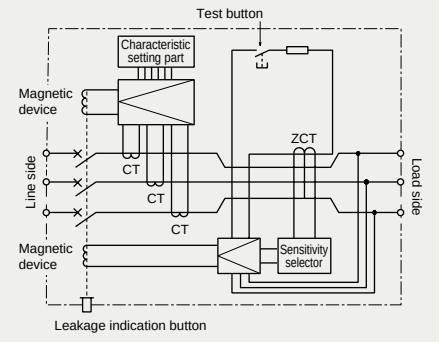

Outline Drawing

Front connection

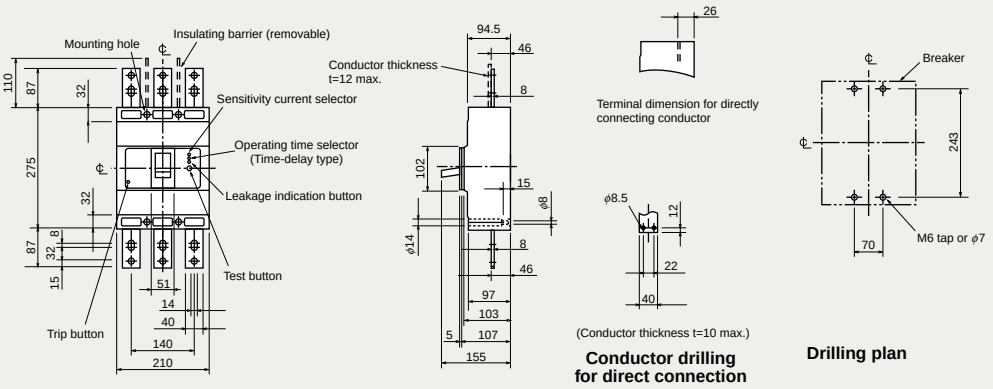

Conductor drilling for direct connection

Drilling plan

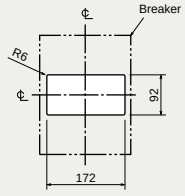

1.0mm clearance on each side of the handle frame.

Front-panel cutout

Rear connection

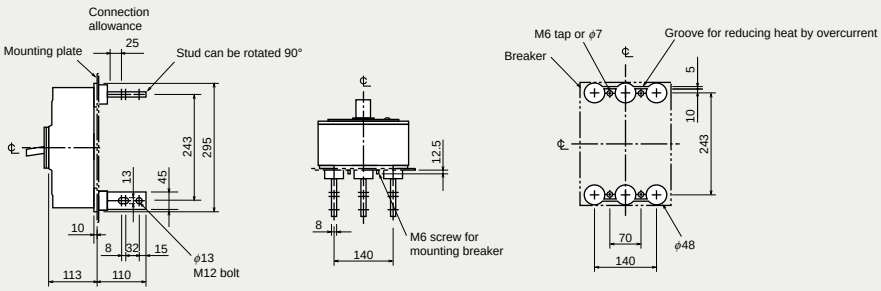

Drilling plan

Boring dimensions for rear connection type barriers (3-pole)

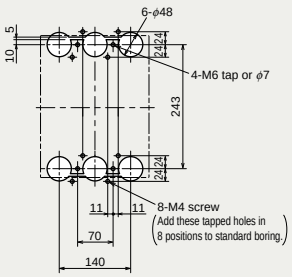

Note The bore dimensional drawing shows the breaker viewed from the rear.

NF50-SVFU
NV50-SVFU

NF50-SVFU

Model				NF50-SVFU	
Rated current In (A) Rated ambient temperature 40°C				(3) 5 10 15 20 30 40 50	
Number of poles				2	3
Rated short-circuit breaking capacity (kA)	UL 489 CSA C22.2 No.5-02	Rated voltage VAC		240	
		AC	600Y/347V	–	
			480V	–	
			480Y/277V	–	
			240V	14	
			120V	–	
	IEC 60947-2 EN 60947-2 (Icu/Ics)	Rated insulation voltage Ui V		440	
		AC	690V	–	
			500V	–	
			440V	7.5/4	
			415V	10/5	
			400V	10/5	
			380V	10/5	
			230V	15/8	
Standard attached parts (Front connection)				IEC35 rail mounting claws	

Model				NV50-SVFU	
Rated current In (A) Rated ambient temperature 40°C				(5) (10) 15 20 30 40 50	
Number of poles				2	3
Phase line				1ϕ2W	3ϕ3W 1ϕ2W
Rated voltage VAC	UL 489			120-240	
	IEC 60947-2 EN 60947-2			100-240	100-440
High-speed type	Rated current sensitivity IΔn mA			30 50	30 50 100
	Pick-up current UL 1053			75% of IΔn	
	Operating time (sec) within AT 5IΔn			0.04 (*1)	
Earth-leakage indication system				Indicator window	
Rated short-circuit breaking capacity (kA)	UL 489 CSA C22.2 No.5-02	AC	480V	–	
			240V	14	
			120V	14	
	IEC 60947-2 EN 60947-2 (Icu/Ics)	AC	440V	–	7.5/4
			400V	–	10/5
			230V	15/8	15/8
			100V	15/8	15/8

Note *1 0.1 for UL1053.
Remark: 1. The mounting screws must be prepared by the user. (Recommended size: M4×0.7×65 (2 pcs).)

Operating Characteristics

(The CE and CCC characteristics are noted differently. Contact us for more information.)

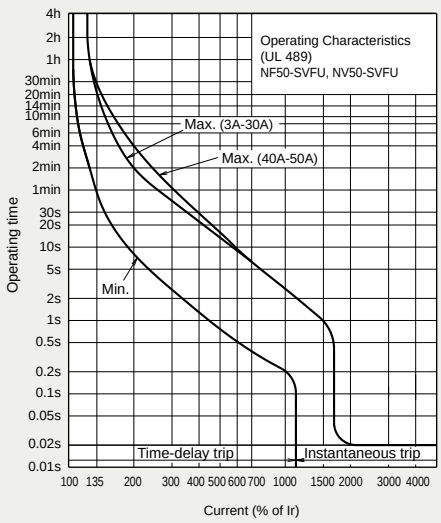

Earth Leakage Tripping Characteristics

(The CE and CCC characteristics are noted differently. Contact us for more information.)

NV50-SVFU
(UL 1053)

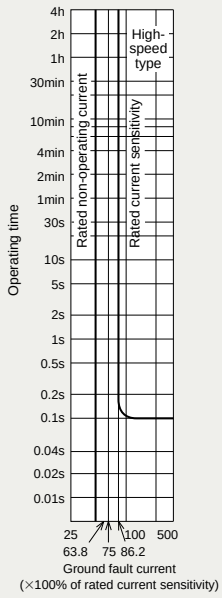

Internal Accessories

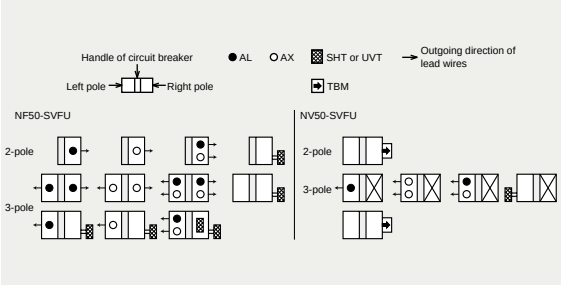

Temperature Compensation Curve

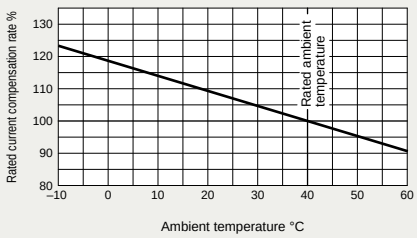

Internal Wiring Diagram

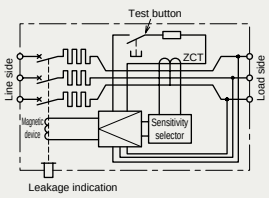

External Accessories

Accessories			Type name
Operating handle	F	2P	F-03SVUL2
		3P	F-03SVUL
	V	2P	V-03SVUL2
		3P	V-03SVUL
Handle lock device	HL		HLF-03SVU
	HL-S		HLS-03SVU

Accessories				Type name
Terminal cover	Large	TC-L	2P	TCL-03SVU2
			3P	TCL-03SVU3

Outline Drawing

Front connection

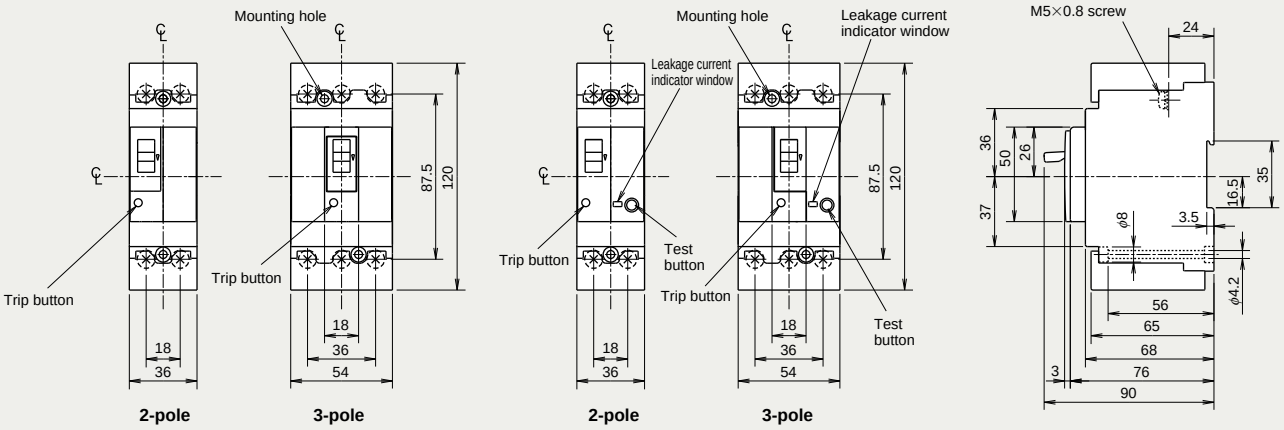

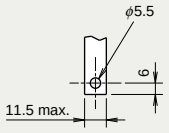

(Conductor thickness t=4 max.)

Conductor drilling for direct connection

Remarks: 1. The mounting screws are not enclosed with the breaker.
2. The wires cannot be connected directly.

Compatible crimp terminals Tightening torque 22lb-in (2.5N·m)

Applicable wire range (*1)		Crimp terminal type (*2)	
mm²	AWG (#) (60°C/75°C)	JST	NTM
1.04-2.63	16-14	R2-5 2-M5 V2-5 V2-M5	R2-5 R2-5M
2.63-4.6	12	-	R3.5-5S R3.5-5L
2.63-6.64	12-10	R5.5-5 V5.5-5	R5.5-5 R5.5-5S R5.5-5N
6.64-10.52	8	R8-5	R8-5 R8-5S
10.52-16.78	6	R14-5 14-NK5	R14-5 R14-5S
16.78-26.66	4	22-S5 22-S6	R22-5S

JST: Japan Solderless Terminal Mfg. Co.
NTM: Nichifu Co., Ltd.
Notes *1 14AWG or lager to comply with UL Standards.
*2 When using with a wire connection, use the crimp terminal combination shown above.

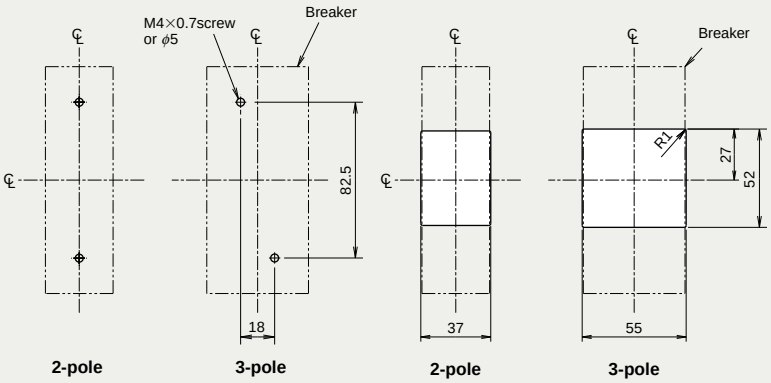

The drilling dimensions have a 1.0 mm clearance on each side of breaker window frame.

Drilling plan **Front panel drilling plan**

NF100-CVFU
NV100-CVFU

NF100-CVFU

Model				NF100-CVFU		Model				NV100-CVFU
Rated current In (A) Rated ambient temperature 40°C				60 (70) 75 (80) (90) 100		Rated current In (A) Rated ambient temperature 40°C				60 (70) 75 (80) (90) 100
						Number of poles				3
						Phase line				3φ3W 1φ2W
Number of poles				2	3	Rated voltage VAC		UL 489		120-240
Rated short-circuit breaking capacity (kA)	UL 489 CSA C22.2 No.5-02	Rated voltage VAC		240				IEC 60947-2 EN 60947-2		100-440
		AC	600Y/347V	–		High-speed type	Rated current sensitivity IΔn mA			30/50/ 100/200/500 selectable
			480V	–						
			480Y/277V	–						
			240V	14			Pick-up current UL 1053			75% of IΔn
			120V	–			Operating time (sec) within AT 5IΔn			0.04 (*1)
	IEC 60947-2 EN 60947-2 (Icu/Ics)	Rated insulation voltage Ui V		600		Earth-leakage indication system				Mechanical button
		AC	690V	–		Rated short-circuit breaking capacity (kA)	UL 489 CSA C22.2 No.5-02	AC	480V	–
			500V	7.5/4					240V	14
			440V	10/5					120V	14
			415V	10/5			IEC 60947-2 EN 60947-2 (Icu/Ics)	AC	440V	10/5
			400V	10/5					400V	10/5
			380V	10/5					230V	15/8
			230V	15/8					100V	15/8
Standard attached parts (Front connection)				IEC35 rail mounting claws, Insulating barrier (2P: 2pcs, 3P: 4pcs) (Only for type with bar terminal) Mounting screw M4×0.7×55 (2 screws)						

Note *1 0.1 for UL1053.

Operating Characteristics

(The CE and CCC characteristics are noted differently. Contact us for more information.)

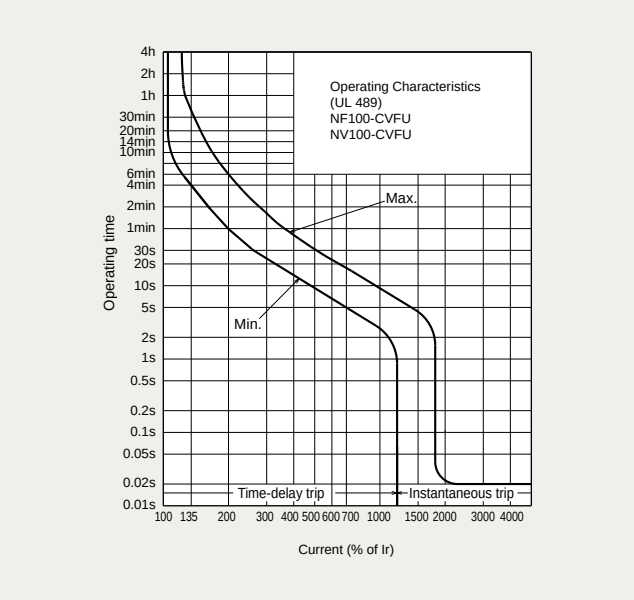

Earth Leakage Tripping Characteristics

(The CE and CCC characteristics are noted differently. Contact us for more information.)

NV100-CVFU
(UL 1053)

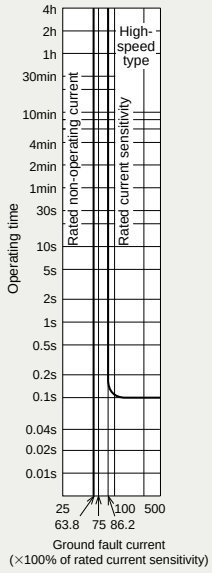

Internal Accessories

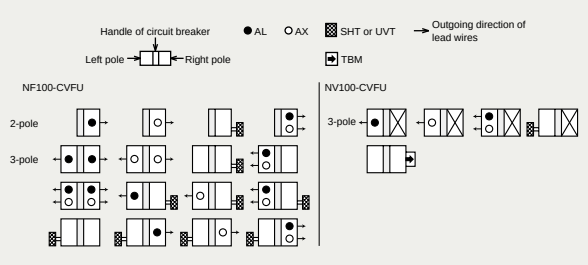

Temperature Compensation Curve

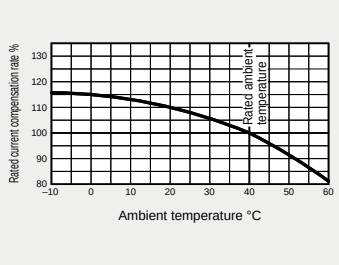

Internal Wiring Diagram

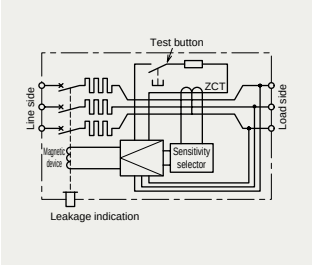

External Accessories

Accessories			Type name	Accessories				Type name
Operating handle	F	2P	F-05SVUL2	Terminal cover	Large	TC-L	2P	TCL-05SVU2
		3P	F-05SVUL					TCL-05SVU2L
	V	2P	V-05SVUL2				3P	TCL-05SVU3
		3P	V-05SVUL					TCL-05SVU3L
Handle lock device	HL		HLF-05SVU					
	HL-S	2P	HLS-05SVU2					
		3P	HLS-05SVU					

Outline Drawing

Front connection

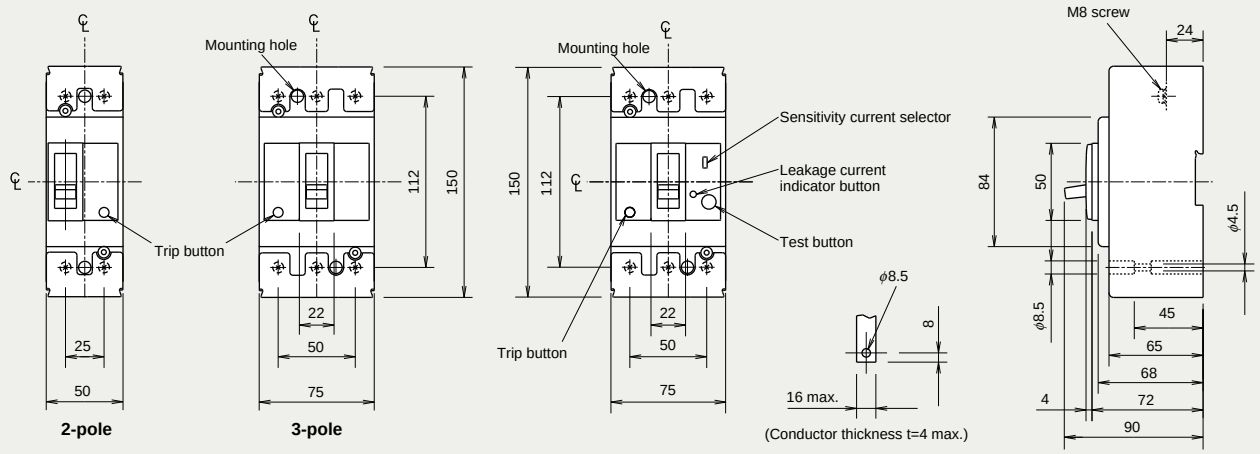

2-pole (NF100-CVFU) 3-pole (NV100-CVFU)

Conductor drilling for direct connection

Compatible crimp terminals Tightening torque 54lb-in (6N·m)

Applicable wire range		Crimp terminal type (*1)	
mm²	AWG (#) (60°C/75°C)	JST	NTM
2.5-2.63	14	R2-8	R2-8
2.63-6.64	12-10	R5.5-8	R5.5-8
6.64-10.52	8	R8-8	R8-8
10.52-16.78	6	R14-8	R14-8 R14-8S
16.78-26.66	4	R22-8	R22-8S
26.66-42.42	2	38-S8	R38-8S
42.42-60.57	1/0	60-2BA 60-S8	CB60-8

JST: Japan Solderless Terminal Mfg. Co.
NTM: Nichifu Co., Ltd.
Note *1 When using with a wire connection, use the crimp terminal combination shown above.

Front connection(solderless terminal)

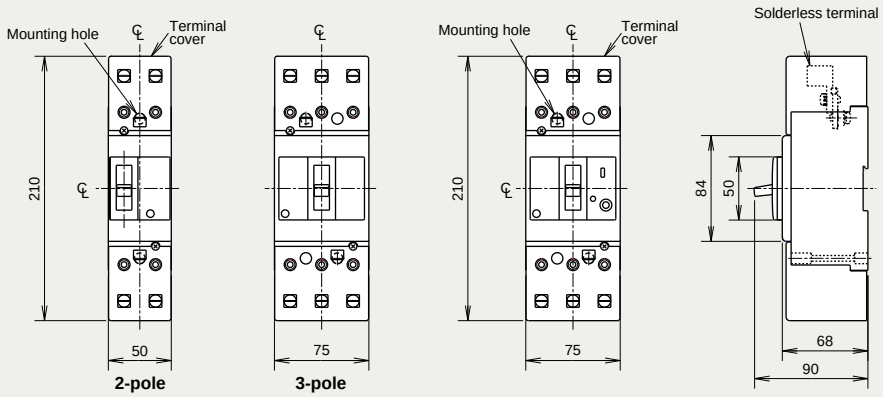

2-pole 3-pole

Size of screwdriver with bolting
Please bolt with flat head screwdriver.
The length of X : 6mm-7mm
The length of Y ≦ 9.5mm

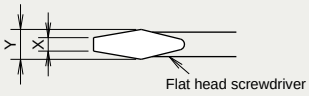

Wire size 60°C/75°C CU ONLY	Number of strands
14AWG	7
12-10AWG	7
8AWG	7
6-4AWG	7
2AWG	7
1-1/0AWG	19

The tightening torque is different according to connected wire.
Refer to instruction manual for details.
Remark: Periodical retightening prevents overheating by the setting of twisted strands or the stress of heating and cooling.

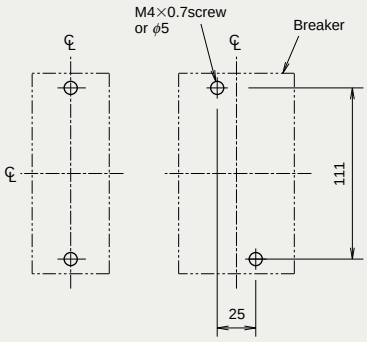

2-pole 3-pole

Drilling plan

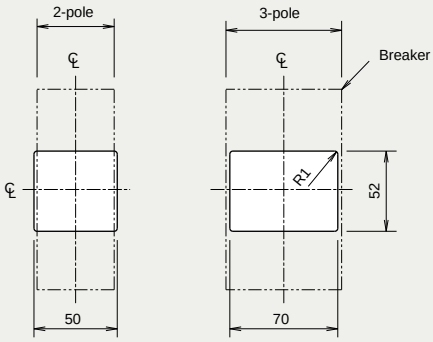

The drilling dimensions have a 1.0 mm clearance on each side of breaker window frame.

Front panel drilling plan

NF125-SVU
NF125-HVU
NV125-SVU
NV125-HVU

NF125-HVU

Model				NF125-SVU		NF125-HVU	
Rated current In (A) Rated ambient temperature 40°C				15 20 30 40 50 60 (70) 75 (80) (90) 100	125	15 20 30 40 50 60 (70) 75 (80) (90) 100	125
Number of poles				2 3	2 3	3	3
Rated short-circuit breaking capacity (kA)	UL 489 CSA C22.2 No.5-02	Rated voltage VAC		480	480	600Y/347V	600Y/347V
		AC	600Y/347V	–	–	18	18
			480V	30	30	50	50
			240V	50	50	100	100
			120V	–	–	–	–
	IEC 60947-2 EN 60947-2 (Icu/Ics)	Rated insulation voltage Ui V		690	690	690	690
		AC	690V	8/4	8/4	10/5	10/5
			500V	18/9	18/9	25/13	25/13
			440V	30/15	30/15	50/25	50/25
			415V	30/15	30/15	50/25	50/25
			400V	30/15	30/15	50/25	50/25
			380V	30/15	30/15	50/25	50/25
			230V	50/25	50/25	100/50	100/50
Standard attached parts (Front connection)				Mounting screw M4×0.7×55 (2 screws), Insulating barrier (2P: 2pcs, 3P: 4pcs)			

Model			NV125-SVU		NV125-HVU	
Rated current In (A) Rated ambient temperature 40°C			15 20 30 (40) 50 60 75 100	125	15 20 30 (40) 50 60 75 100	125
Number of poles			3	3	3	3
Phase line			3φ3W 1φ2W	3φ3W 1φ2W	3φ3W 1φ2W	3φ3W 1φ2W
Rated voltage VAC	UL 489		120-480	120-480	120-480	120-480
	IEC 60947-2 EN 60947-2		100-440	100-440	100-440	100-440
High-speed type	Rated current sensitivity IΔn mA		30/50/100/200/500 selectable	30/50/100/200/500 selectable	30/50/100/200/500 selectable	30/50/100/200/500 selectable
	Pick-up current UL 1053		75% of IΔn	75% of IΔn	75% of IΔn	75% of IΔn
	Operating time (sec) within AT 5IΔn		0.04 (*1)	0.04 (*1)	0.04 (*1)	0.04 (*1)
Earth-leakage indication system			Mechanical button	Mechanical button	Mechanical button	Mechanical button
Rated short-circuit breaking capacity (kA)	UL 489 CSA C22.2 No.5-02	AC	480V	30	30	50	50
			240V	50	50	100	100
			120V	50	50	100	100
	IEC 60947-2 EN 60947-2 (Icu/Ics)	AC	440V	30/15	30/15	50/25	50/25
			400V	30/15	30/15	50/25	50/25
			230V	50/25	50/25	100/50	100/50
			100V	50/25	50/25	100/50	100/50

Note *1 0.1 for UL1053.

Operating Characteristics (The CE and CCC characteristics are noted differently. Contact us for more information.)

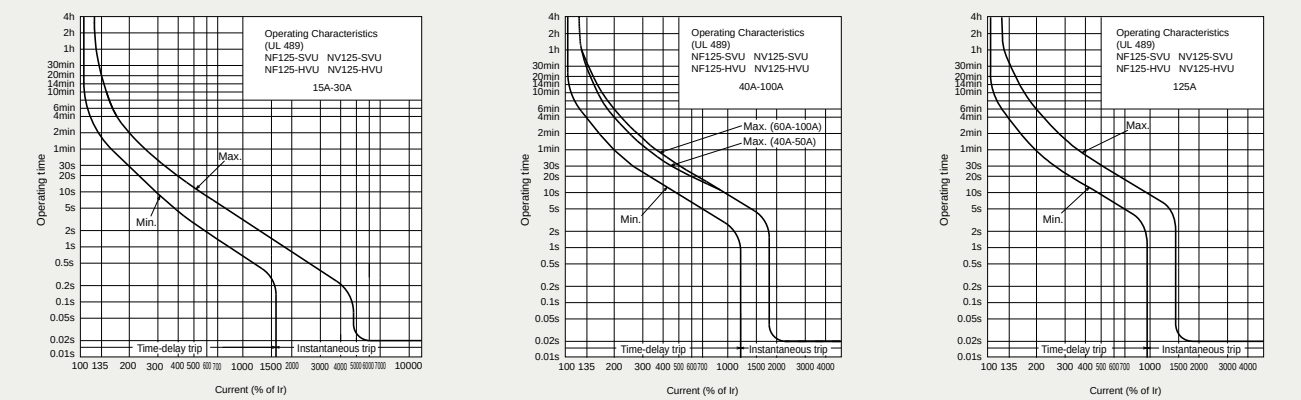

Earth Leakage Tripping Characteristics

(The CE and CCC characteristics are noted differently. Contact us for more information.)

NV125-SVU
NV125-HVU
(UL 1053)

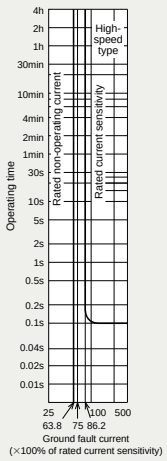

Internal Accessories

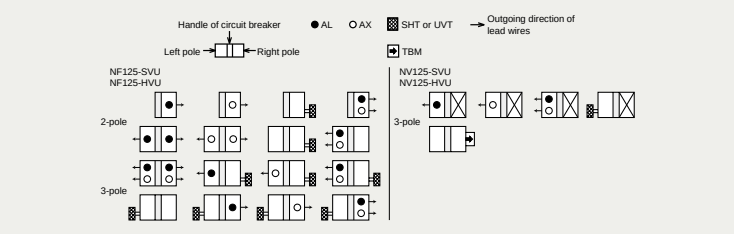

Temperature Compensation Curve

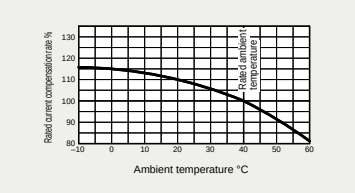

Internal Wiring Diagram

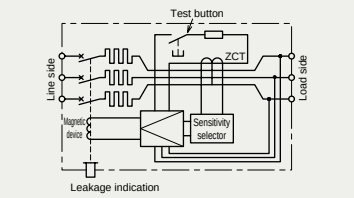

External Accessories

Accessories		Type name	Accessories			Type name
Operating handle	F	F-1SVUL	Terminal cover	Large	TC-L	TCL-1SVU3
	V	V-1SVUL				
Handle lock device	HL	HLF-05SVU				
	HL-S	HLS-05SVU				

Outline Drawing

Front connection

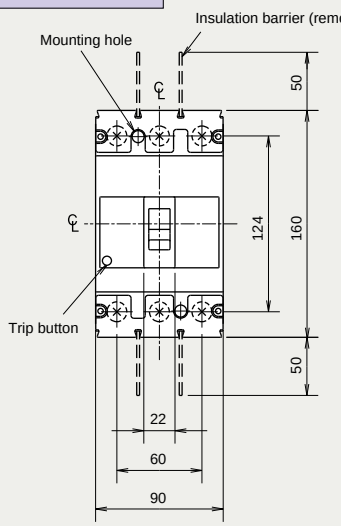

(NF125-SVU, NF125-HVU)

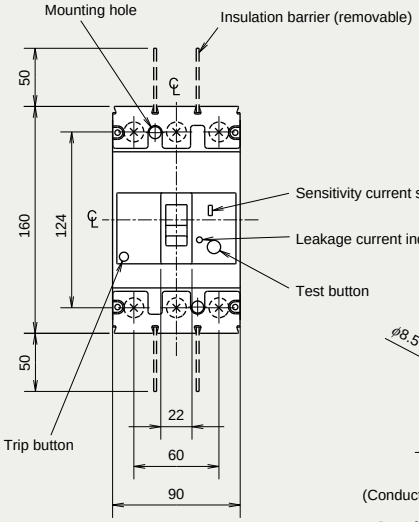

(NV125-SVU, NV125-HVU)

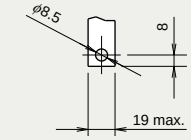

(Conductor thickness t=4 max.)

Conductor drilling for direct connection

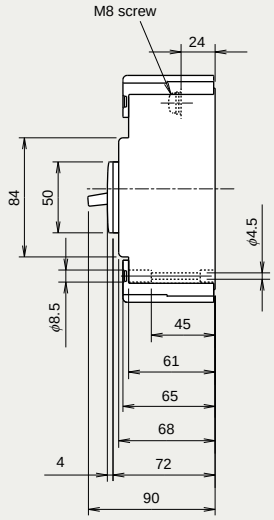

Compatible crimp terminals Tightening torque 54lb-in (6N·m)

Applicable wire range		Crimp terminal type (*1)	
mm^2	AWG (#) (60°C/75°C)	JST	NTM
2.5-2.63	14	R2-8	R2-8
2.63-6.64	12-10	R5.5-8	R5.5-8
6.64-10.52	8	R8-8	R8-8
10.52-16.78	6	R14-8	R14-8 R14-8S
16.78-26.66	4	R22-8	R22-8S
26.66-42.42	2	38-S8	R38-8S
42.42-60.57	1/0	60-2BA 60-S8	CB60-8

JST: Japan Solderless Terminal Mfg. Co.
NTM: Nichifu Co., Ltd.
Note *1 When using with a wire connection, use the crimp terminal combination shown above.

Front connection (solderless terminal)

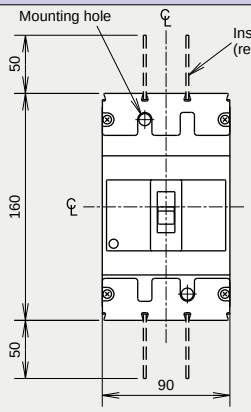

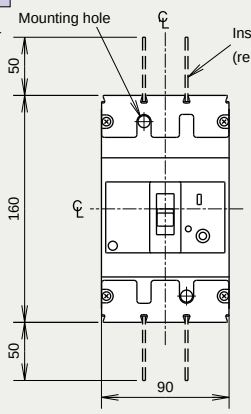

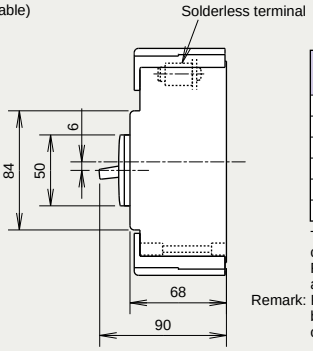

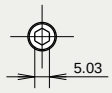

Wire size 60°C/75°C CU ONLY	Number of strands
14AWG	[a] 7
12-10AWG	[a] 7
8AWG	7
6AWG	7
4-2AWG	7
1AWG	19

The tightening torque is different according to connected wire.
Refer to instruction manual for details.
a:Solid copper wire is usable.
Remark: Periodical retightening prevents overheating by the setting of twisted strands or the stress of heating and cooling.

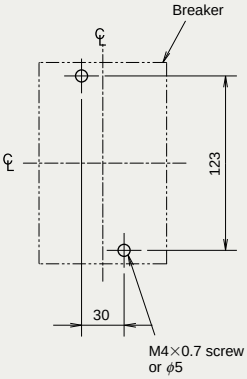

Drilling plan

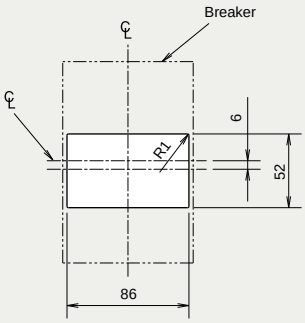

The drilling dimensions have a 1.0 mm clearance on each side of breaker window frame.

Front panel drilling plan

Remark: 1. 2-pole models are 3-pole with the central pole conductor removed.

NF225-CWU

NF225-CWU

Model				NF225-CWU
Rated current In (A) at ambient temperature 40˚C (IEC30˚C)				125 150 175 200 225
Number of poles				3
Rated short-circuit breaking capacities (kA)	UL 489	Rated voltage (VAC)		240
		AC	240V	35
	IEC 60947-2 (Icu/Ics)	Rated insulation voltage Ui (V)		600
		AC	500V	10/5
			440V	15/8
			400V	18/9
			230V	35/18
		DC	250V	10/5 (*1)
Standard attached parts				Mounting screw: M4×0.7×55 (2pcs), Insulation barrier: (4pcs), Terminal cover: (1 set) (*2)

Notes *1 Use either two poles. When wired as shown at the bottom of page 690, the models can be used for up to 400 V DC.
*2 The standard configuration contains a protection cover and adopts the IP20 (finger protection) structure.

Operating Characteristics

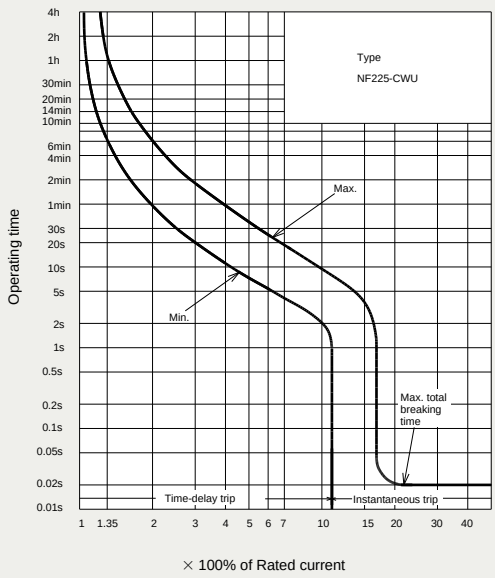

Internal Accessories

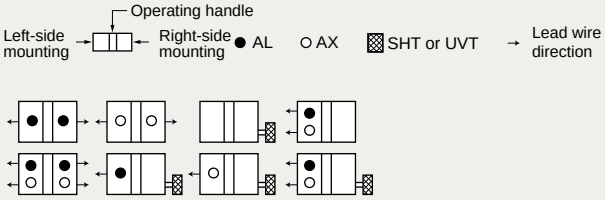

Temperature Compensation Curve

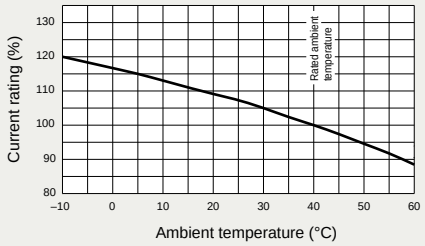

External Accessories

Accessories		Type name	Accessories			Type name
Operating handle	F	F-2SUL	Mechanical interlock		MI	MI-05SWU3
	V	V-2SUL	Terminal cover	Large	TC-L	TCL-2SWU3 TCL-2SWU3L
Handle lock device	HL	HLF-2SWU				

Outline Drawing

Front connection

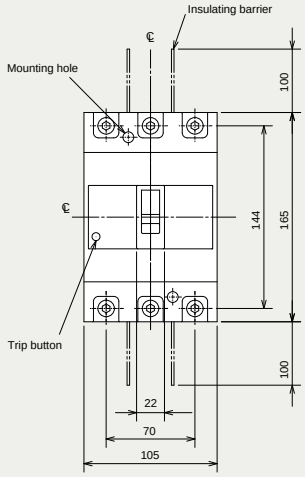

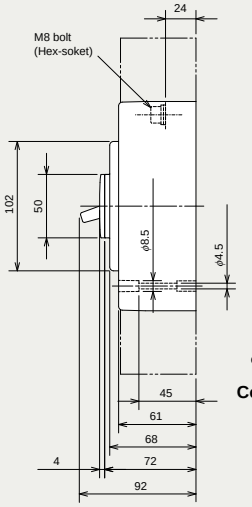

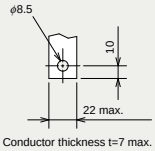

Conductor drilling for direct connection

Compatible crimp terminals Tightening torque 90lb-in (10N.m)

Applicable wire range		Crimp terminal type (*1)	
mm²	AWG (#) (60°C/75°C)	JST	NTM
16.78-26.66	4	R22-8 22-S8	R22-8 R22-8S CB22-8S
26.66-42.42	2	R38-8 38-S8	R38-8 R38-8S
42.42-60.57	1/0	R60-8 60-2BA CB60-S8	R60-8 CB60-8 CB60-8S
60.57-76.28	2/0	70-8	R70-8
76.28-96.3	3/0	80-3BA CB80-S8	
96.3-117.2	4/0	100-3BA CB100-S8	

JST: Japan Solderless Terminal Mfg. Co.
NTM: Nichifu Co., Ltd.
Note *1 When using with a wire connection, use the crimp terminal combination shown above.

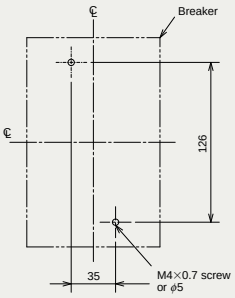

Drilling plan

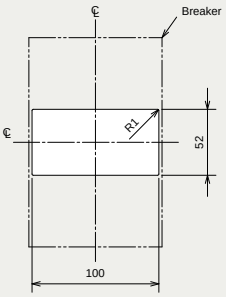

Front cover cutout

1mm clearance on each side of handle

NF250-SVU
NF250-HVU
NV250-SVU
NV250-HVU

NF250-HVU

Model				NF250-SVU		NF250-HVU	
Rated current In (A) Rated ambient temperature 40°C				125 150 175 200 225	250	125 150 175 200 225	250
Number of poles				3	3	3	3
Rated short-circuit breaking capacity (kA)	UL 489 CSA C22.2 No.5-02	Rated voltage VAC		480	480	600Y/347V	600Y/347V
		AC	600Y/347V	–	–	18	18
			480V	35	35	50	50
			240V	65	65	100	100
			120V	–	–	–	–
	IEC 60947-2 EN 60947-2 (Icu/Ics)	Rated insulation voltage Ui V		690	690	690	690
		AC	690V	8/4	8/4	10/5	10/5
			500V	25/13	25/13	36/18	36/18
			440V	36/18	36/18	50/25	50/25
			415V	36/18	36/18	50/25	50/25
			400V	36/18	36/18	50/25	50/25
			380V	36/18	36/18	50/25	50/25
			230V	65/33	65/33	100/50	100/50
Standard attached parts (Front connection)				Mounting screw M4×0.7×55 (2 screws), Insulating barrier (4pcs)			

Model				NV250-SVU		NV250-HVU	
Rated current In (A) Rated ambient temperature 40°C				125 150 175 200 225	250	125 150 175 200 225	250
Number of poles				3	3	3	3
Phase line				3ø3W 1ø2W	3ø3W 1ø2W	3ø3W 1ø2W	3ø3W 1ø2W
Rated voltage VAC	UL 489			120-480	120-480	120-480	120-480
	IEC 60947-2 EN 60947-2			100-440	100-440	100-440	100-440
High-speed type	Rated current sensitivity IΔn mA			30/50/100/200/500 selectable	30/50/100/200/500 selectable	30/50/100/200/500 selectable	30/50/100/200/500 selectable
	Pick-up current UL 1053			75% of IΔn	75% of IΔn	75% of IΔn	75% of IΔn
	Operating time s within AT 5IΔn			0.04 (*1)	0.04 (*1)	0.04 (*1)	0.04 (*1)
Earth-leakage indication system				Mechanical button	Mechanical button	Mechanical button	Mechanical button
Rated short-circuit breaking capacity (kA)	UL 489 CSA C22.2 No.5-02	AC	480V	35	35	50	50
			240V	65	65	100	100
			120V	65	65	100	100
	IEC 60947-2 EN 60947-2 (Icu/Ics)	AC	440V	36/18	36/18	50/25	50/25
			400V	36/18	36/18	50/25	50/25
			230V	65/33	65/33	100/50	100/50
			100V	65/33	65/33	100/50	100/50

Note *1 0.1 for UL1053.

Operating Characteristics (The CE and CCC characteristics are noted differently. Contact us for more information.)

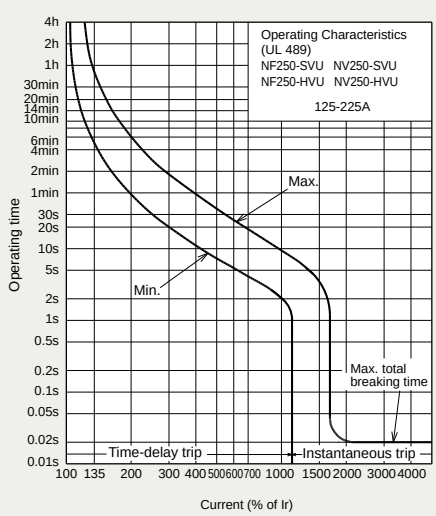

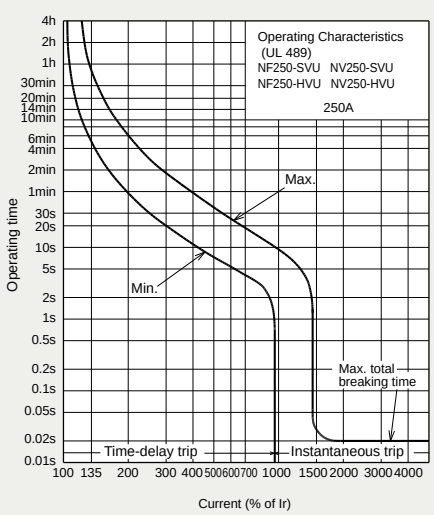

Earth Leakage Tripping Characteristics

(The CE and CCC characteristics are noted differently. Contact us for more information.)

NV250-SVU
NV250-HVU
(UL 1053)

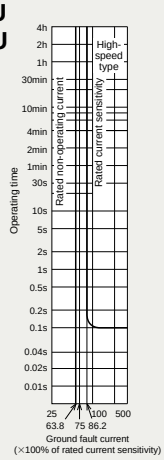

Internal Accessories

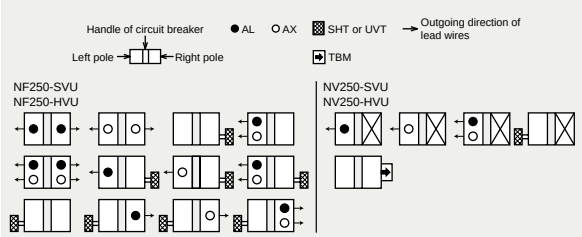

Temperature Compensation Curve

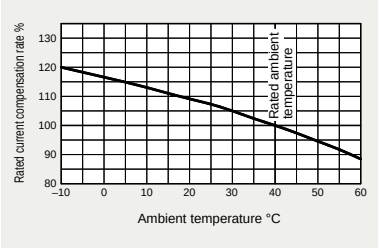

Internal Wiring Diagram

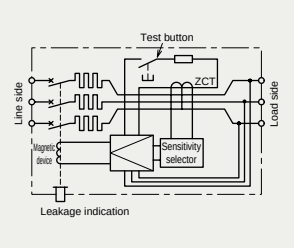

External Accessories

Accessories		Type name
Operating handle	F	F-2SVUL
	V	V-2SVUL
Handle lock device	HL	HLF-05SVU
	HL-S	HLS-2SVU

Accessories			Type name
Terminal cover	Large	TC-L	TCL-2SVU3
			TCL-2SVU3L

Outline Drawing

Front connection

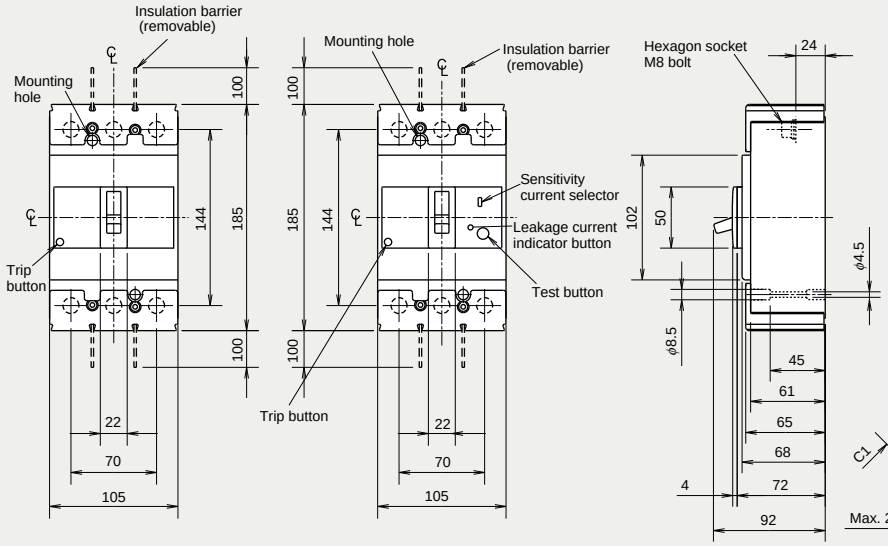

(NF250-SVU, NF250-HVU) (NV250-SVU, NV250-HVU)

Compatible crimp terminals Tightening torque 90lb-in (10N.m)

Applicable wire range		Crimp terminal type (*2)	
mm²	AWG (#) (60°C/75°C)	JST	NTM
16.78-26.66	4	R22-8 22-S8	R22-8 R22-8S CB22-8S
26.66-42.42	2	R38-8 38-S8	R38-8 R38-8S
42.42-60.57	1/0	R60-8 60-2BA CB60-S8	R60-8 CB60-8 CB60-8S
60.57-76.28	2/0	70-8	R70-8
76.28-96.3	3/0	80-3BA CB80-S8	
96.3-117.2	4/0	100-3BA CB100-S8	
117.2-152.05	250/300MCM	CB150-S8 (*1)	

JST: Japan Solderless Terminal Mfg. Co.
NTM: Nichifu Co., Ltd.
Notes *1 TCL-2SVU3L can be mounted when using CB150-S8.
*2 When using with a wire connection, use the crimp terminal combination shown above.

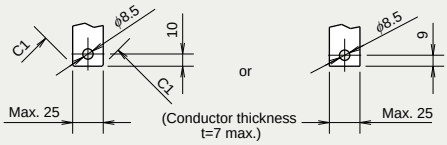

Conductor drilling for direct connection

Front connection (solderless terminal)

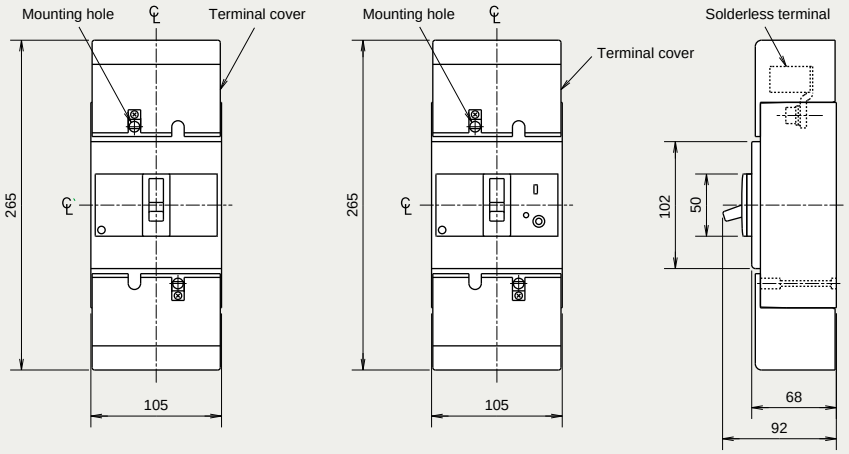

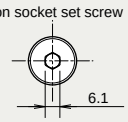

Wire size 60°C/75°C CU ONLY	Number of strands
4-2AWG	7
1-1/0AWG	19
3/0-4/0AWG	19
250-350MCM	37

The tightening torque is different according to connected wire.
Refer to instruction manual for details.

Remark: Periodical retightening prevents overheating by the setting of twisted strands or the stress of heating and cooling.

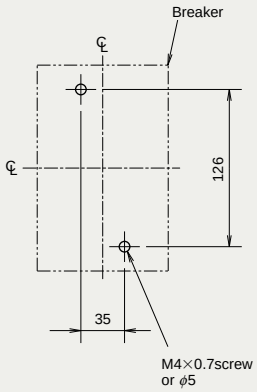

Drilling plan

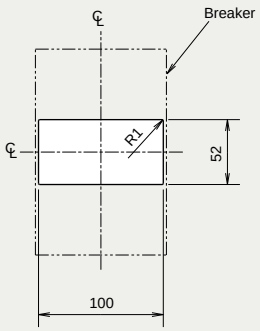

The drilling dimensions have a 1.0 mm clearance on each side of breaker window frame.

Front panel drilling plan

NF400-SWU
NF400-HWU

NF400-SWU

Model				NF400-SWU	NF400-HWU
Rated current In (A) at ambient temperature 40˚C				250 300 350 400	250 300 350 400
Number of poles				3	3
Rated short-circuit breaking capacities (kA)	UL 489 CSA C22 2 No.5-02	Rated voltage (VAC)		600Y/347	600Y/347
		AC	600Y/347V	20	25
			480V	35	65
			240V	65	100
	IEC 60947-2 EN 60947-2 (Icu/Ics)	Rated insulation voltage Ui (V)		690	690
		AC	690V	10/10 (5/5) (*1)	15/10
			500V	30/30 (25/25) (*1)	42/42
			440V	42/42 (36/36) (*1)	65/65
			400V	45/45 (36/36) (*1)	70/70
			230V	85/85 (65/65) (*1)	100/100
Standard attached parts				Mounting screw: M6×60 (4screws) Insulating plate (1pce) Insulating barrier (4pcs) (Only for type with bar terminals)	Mounting screw: M6×60 (4screws) Insulating plate (1pce) Insulating barrier (4pcs) (Only for type with bar terminals)

Notes *1 In case of solderless terminal, interrupting capacity reduces: (/).
*2 0.1 for UL1053.

Operating Characteristics

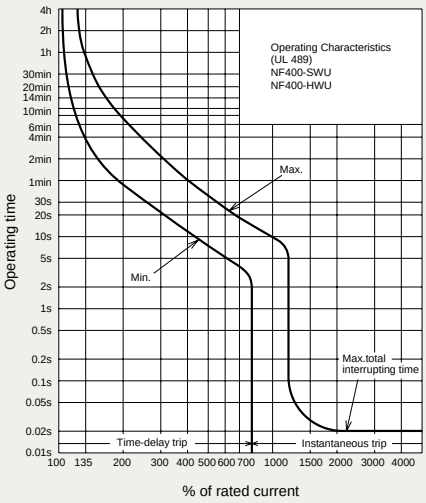

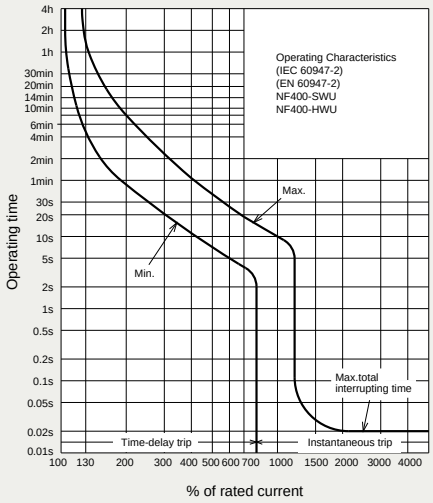

Internal Accessories

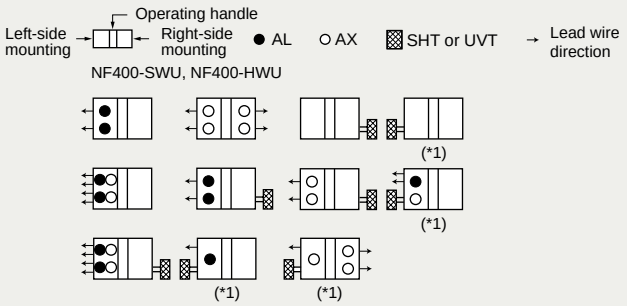

Note *1 Right-side mounting is standard of SHT and UVT. Specify separataly for left-side mounting.

Temperature Compensation Curve

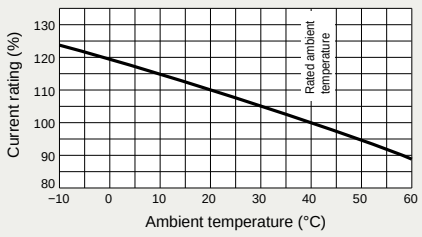

External Accessories

Accessories		Type name	Accessories			Type name
Operating handle	F	F-4SUL	Terminal cover	Large	TC-L	TCL-4SWU
	V	V-4SUL				
Handle lock device	HL	HL-4SWU				

Outline Drawing

Front connection (Solderless terminal)

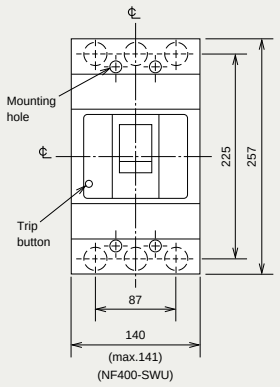

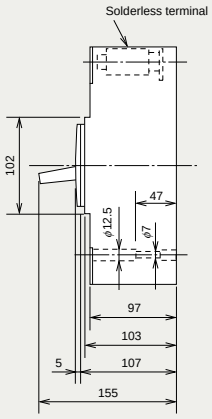

Hexagon socket set screw

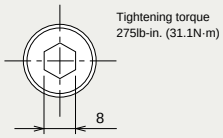

UL

Ampere ratings	Wire size	Number of strands
250A, 300A	250-350kcmil CU	37
250A	350kcmil AL	
350A, 400A	(2) 3/0AWG CU	19

IEC

Ampere ratings	Wire size (IEC 60228)	
	Class 2	Class 5
250A, 300A	70-185mm^2	95-185mm^2
350A, 400A	150-240mm^2	150-185mm^2

Remarks: 1. Do not remove solderless terminal in any case.
2. When using the solderless terminals, conduct periodic inspections and tightening as the wires may wear down over use.
3. Use a wire size that can carry the rated current.
4. When using IEC Class 5 (multi-core wire), pay attention to strand breakage and pinching, etc., while tightening.
5. The NF400-HWU does not have a solderless terminal.

Front connection (Busbar terminal)

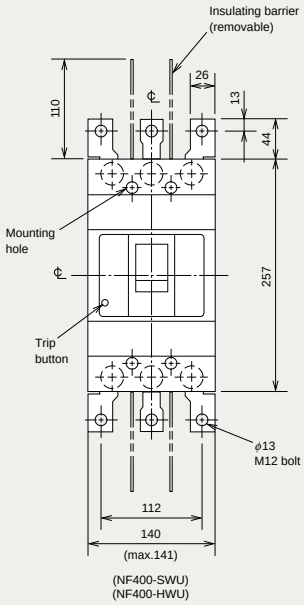

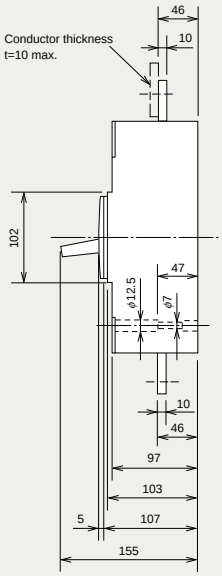

Remark: Do not remove busbar terminal in any case.

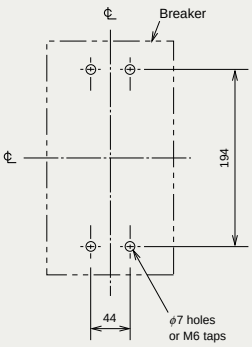

Drilling plan

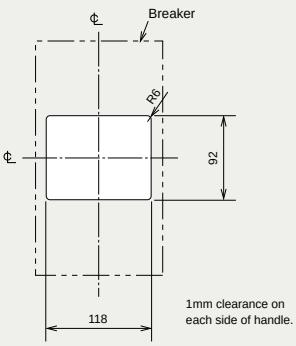

Front-panel cutout

CAUTION

When mounted in steel or cast box cover must be insulated as shown.
58mm air gap to cover or 0.8mm fibre insulating plate extending 12.7mm out from each side of breaker.

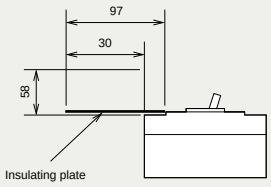

(Line)

NF630-SWU
NF630-HWU

NF630-SWU

Model				NF630-SWU	NF630-HWU
Rated current In (A) at ambient temperature 40˚C				500 600 630	500 600 630
Number of poles				3	3
Rated short-circuit breaking capacities (kA)	UL 489 CSA C22.2 No.5-02	Rated voltage (VAC)		600Y/347	600Y/347
		AC	600Y/347V	20	25
			480V	35	65
			240V	85	100
	IEC 60947-2 EN 60947-2 (Icu/Ics)	Rated insulation voltage Ui (V)		690	690
		AC	690V	10/10	15/10
			500V	30/30	42/42
			440V	42/42	65/65
			400V	45/45	70/70
			230V	85/85	100/100
Standard attached parts				Mounting screw: M6×35 (4pcs) Insulating plate (1pce) Insulating barrier (500A,600A: 2pcs, 630A: 4pcs) (Only for type with bar terminals)	Mounting screw: M6×35 (4pcs) Insulating plate (1pce) Insulating barrier (500A,600A: 2pcs, 630A: 4pcs) (Only for type with bar terminals)

Operating Characteristics

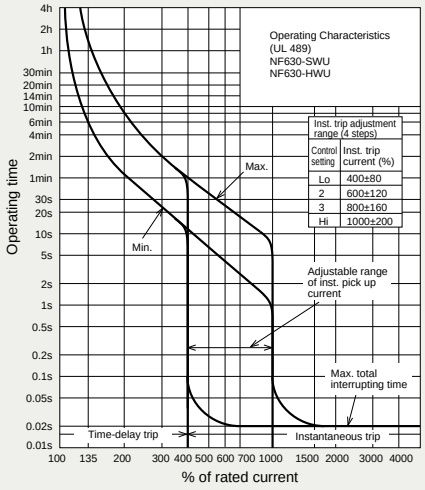

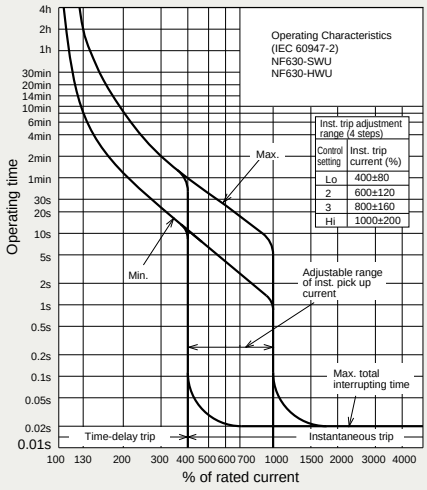

Internal Accessories

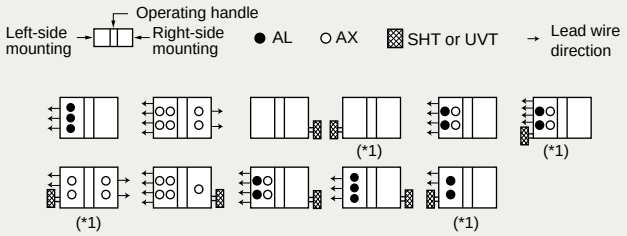

Note *1 Right-side mounting is standard of SHT and UVT. Specify separataly for left-side mounting.

Temperature Compensation Curve

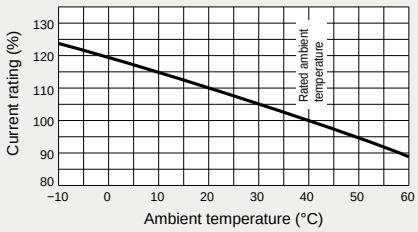

External Accessories

Accessories		Type name	Accessories			Type name
Operating handle	F	F-6SUL	Terminal cover	Large	TC-L	TCL-6SWU
	V	V-6SUL				
Handle lock device	HL	HL-4SWU				

Outline Drawing

Front connection (Solderless terminal)

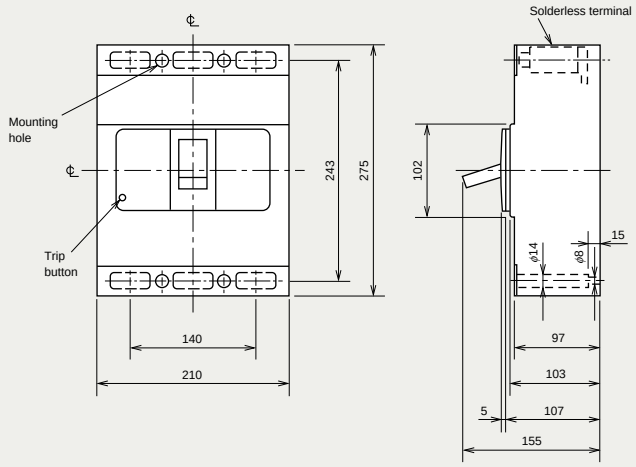

Hexagon socket set screw

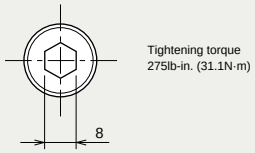

UL

Ampere ratings	Wire size	Number of strands
500A, 600A	(2) 250-350kcmil CU ONLY	37

IEC

Ampere ratings	Wire size (IEC 60228)	
	Class 2	Class 5
500A, 600A	(2) 95-185mm^2	(2) 120-185mm^2

Remarks: 1. Do not remove solderless terminal in any case.
2. When using the solderless terminals, conduct periodic inspections and tightening as the wires may wear down over use.
3. Use a wire size that can carry the rated current.
4. When using IEC Class 5 (multi-core wire), pay attention to strand breakage and pinching, etc., while tightening.
5. The 630A and NF630-HWU does not have a solderless terminal.

Front connection (Busbar terminal)

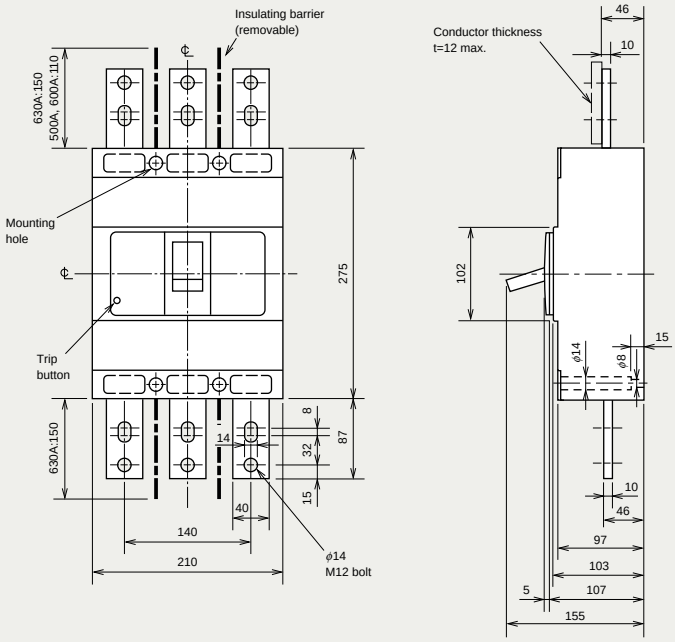

Remark: Do not remove busbar terminal in any case.

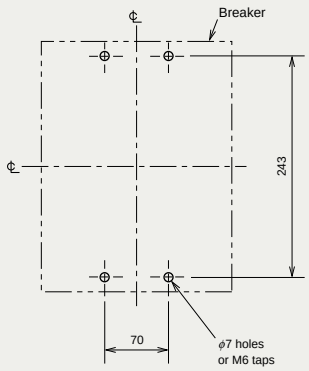

Drilling plan

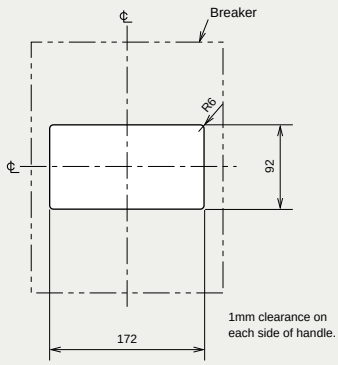

Front-panel cutout

CAUTION

When mounted in steel or cast box cover must be insulated as shown.
58mm air gap to cover or 0.8mm fibre insulating plate extending 12.7mm out from each side of breaker.

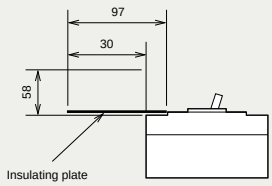

(Line)

NF250-SEV with MDU
NF250-HEV with MDU

NF250-SEV with MDU
(Breaker mounting)

NF250-SEV with MDU
(Panel mounting)

Model				NF250-SEV with MDU		NF250-HEV with MDU	
Rated current In (A) Rated ambient temperature 40°C				250		250	
Current setting Ir (A)				125-250		125-250	
Number of poles				3	4	3	4
Rated insulation voltage Ui (V)				690		690	
Rated short-circuit breaking capacity (kA)	IEC 60947-2 (Icu/Ics)	AC	690V	8/8		10/8	
			500V	18/18		30/23	
			440V	36/36		50/50	
			415V	36/36		70/70	
			400V	36/36		75/75	
			380V	36/36		75/75	
			230V	85/85		100/100	
		DC	250V	–		–	
Standard attached parts (Front connection)				Mounting screw M4 × 0.7 × 55 (3P: 2psc, 4P: 4pcs) Insulation barrier (3P: 4pcs, 4P: 6pcs)			
MDU accessories		Breaker mounting		MDU, Connection cable (for breaker mounting)			
		Panel mounting		MDU, Panel mounting bracket, Panel mounting screw, Connection cable (for panel mounting)			

Operating Characteristics

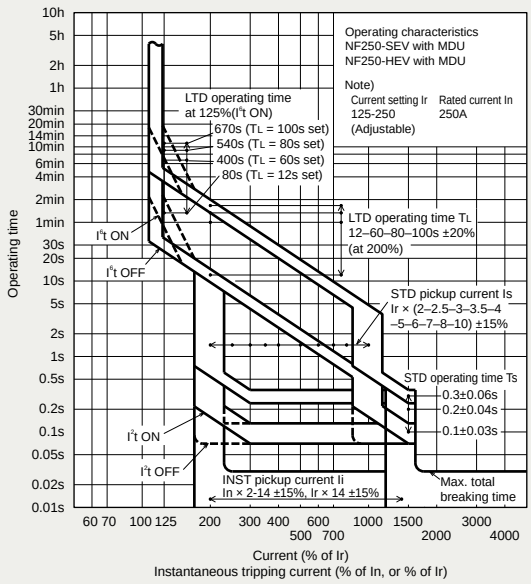

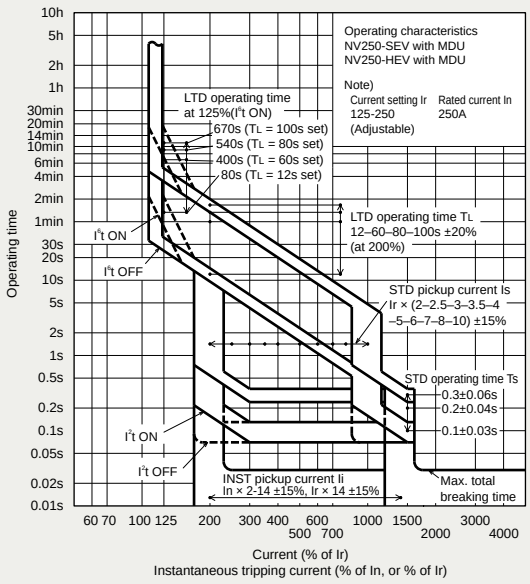

Internal Accessories

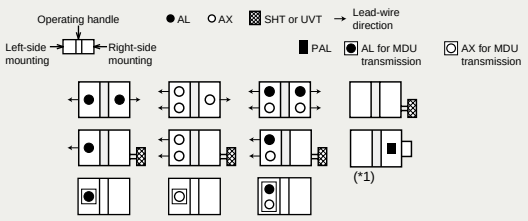

Note *1 SLT-equipped is standard. Control voltage (100-240VAC/100-240VDC) is necessary.

Current Reducing Curve

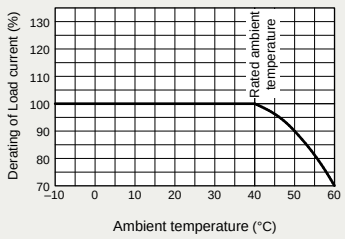

The rated current does not have thermal characteristics. Reduce the current as shown in the curve on the left chart if the ambient temperature exceeds 40 °C.

External Accessories

Accessories		Type name
Operating handle (*1)	F	F-2SV
	V	V-2SV
Handle lock device	LC	LC-05SV
	HL (*2)	HLF-05SV
		HLN-05SV
	HL-S (*1)	HLS-2SV

Accessories				Type name
Mechanical interlock	MI (*3)		3P	MI-05SV3
			4P	MI-2SV4
Terminal cover	Small	TC-S	3P	TCS-2SV3 (*5)
	Large	TC-L	3P	TCL-2SV3 (*5)
				TCL-2SV3L (*5)
			4P	TCL-2SV4
	Skeleton	TTC	3P	TTC-2SV3 (*5)
	Rear	BTC	3P	BTC-2SV3 (*5)
Electrical operation device (*1)				(*4)

Notes
*1 Available only for the MDU panel mounting type.
*2 HLF types are used for OFF lock and HLN types for ON lock.
*3 When selecting the MDU breaker mounting, only the MI panel mounting can be manufactured.
*4 Specify the working voltage.
*5 In the case of the MDU breaker mounting type, specify the model name with MP at the end.

Outline Drawing

Front connection

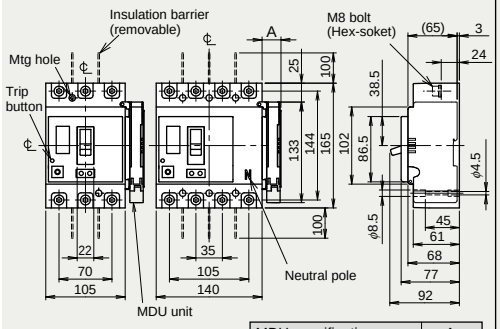

3-pole 4-pole

MDU breaker mounting

MDU specification	A
No transmission, pulse output	25
CC-Link	32

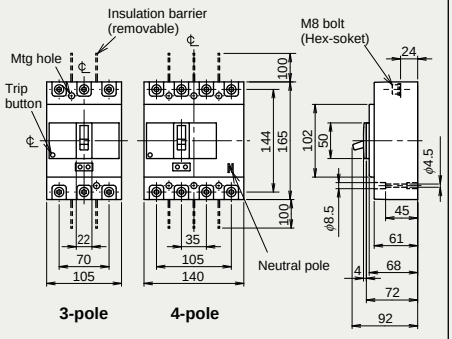

3-pole 4-pole

MDU panel mounting

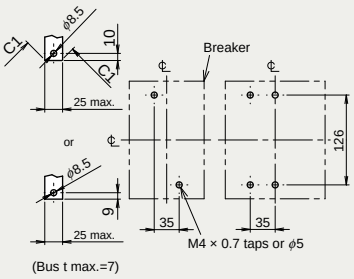

3-pole 4-pole

Bus drilling for direct connection

Drilling plan

Rear mounting

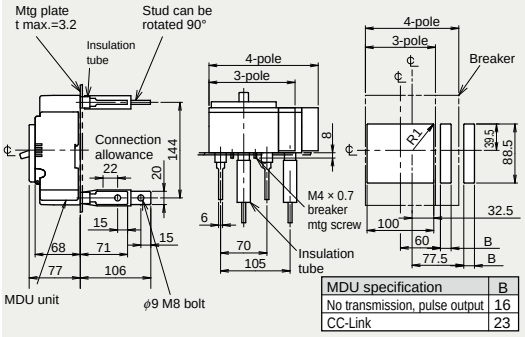

MDU specification	B
No transmission, pulse output	16
CC-Link	23

MDU breaker mounting

Front-plate cut out

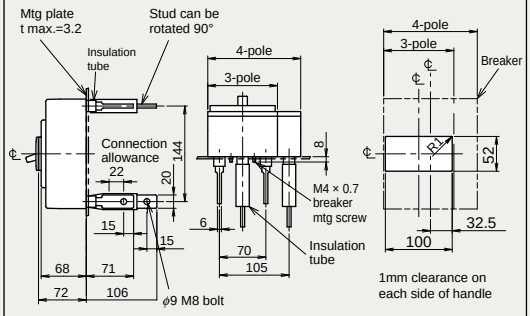

Front-plate cut out

MDU panel mounting

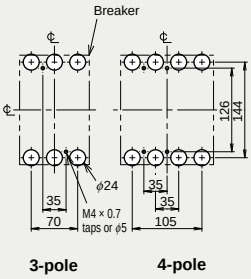

3-pole 4-pole

Drilling plan

MDU unit terminal for breaker mounting

This figure is without terminal cover.
Please bind wires.

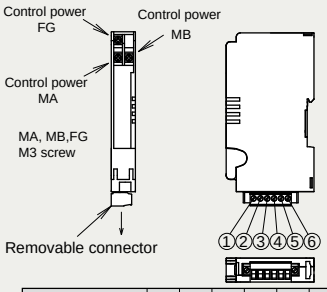

MDU specification	①	②	③	④	⑤	⑥
No transmission	–	–	–	–	–	–
Pulse output	–	–	–	–	Cb	Ca
CC-Link	–	SLD	–	DG	DB	DA

MDU panel mounting

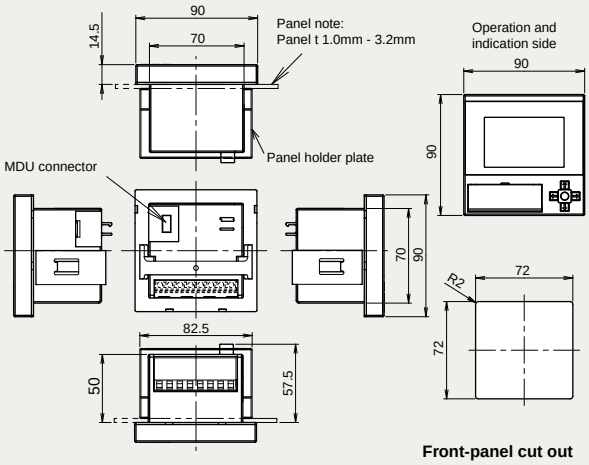

Front-panel cut out

MDU terminal for panel mounting

This figure is without terminal cover.
Please bind wires.

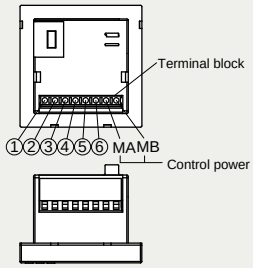

MDU specification	①	②	③	④	⑤	⑥
No transmission	–	–	–	–	FG	–
Pulse output	Ca	Cb	–	–	FG	–
CC-Link	DA	DB	DG	SLD	FG	–

NF400-SEP with MDU
NF400-HEP with MDU

NF400-SEP with MDU (Breaker mounting)

Model				NF400-SEP with MDU		NF400-HEP with MDU	
Rated current In (A) Rated ambient temperature 40°C				200 225 250 300 350 400 Adjustable			
Number of poles				3	4	3	4
Rated operational voltage Ue V				690		690	
Rated short-circuit breaking capacity (kA)	IEC 60947-2 (Icu/Ics)	AC	690V	10/10		10/10	
			500V	30/30		50/50	
			440V	42/42		65/65	
			415V	45/45		70/70	
			400V	45/45		70/70	
			380V	45/45		70/70	
			230V	85/85		100/100	
			200V	85/85		100/100	
Standard attached parts (Front connection)		Breaker		Mounting screw M6 × 60 (4pcs) Insulation barrier (3P: 4pcs, 4P: 6pcs)			
MDU accessories		Breaker mounting		MDU, Connection cable (for breaker mounting)			
		Panel mounting		MDU, Panel mounting bracket, Panel mounting screw, Connection cable (for panel mounting)			

Operating Characteristics

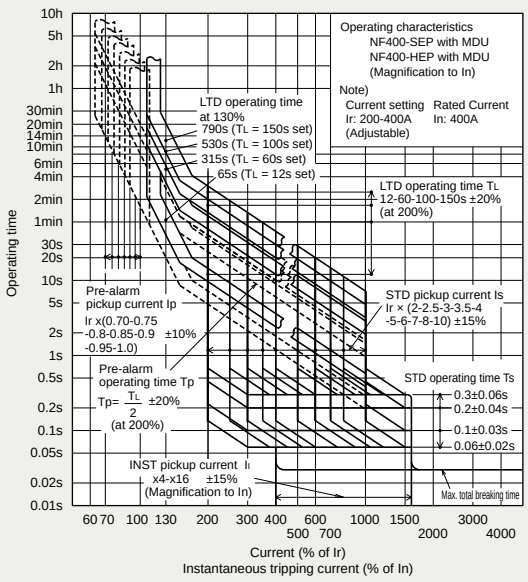

Internal Accessories

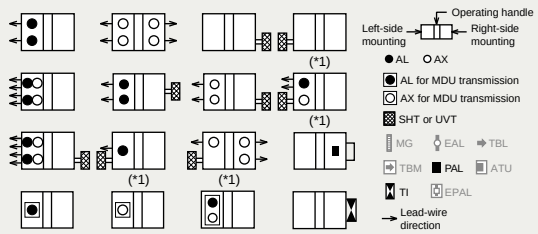

Note *1 Right side mounting is standard of SHT and UVT. Specify separately for left side mounting.

Current Reducing Curve

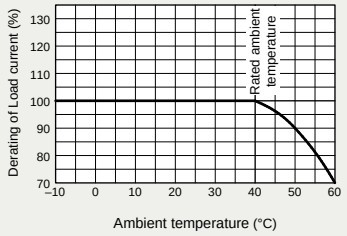

The rated current does not have thermal characteristics. Reduce the current as shown in the curve on the left chart if the ambient temperature exceeds 40°C.

External Accessories

Accessories			Type name	
			Breaker mounting	Panel mounting
Operating handle	F		–	F-4S
	V		–	V-4S
Handle lock device	HL		HL-4SW	HL-4SW
	HL-S		–	HLS-4SW
Mechanical interlock	MI (*2)	3P	MI-4SW3	MI-4SW3
		4P	MI-4SW4	MI-4SW4
Auxiliary handle	HT		HT-4SW	HT-4SW

Accessories				Type name	
				Breaker mounting	Panel mounting
Terminal cover	Large	TC-L	3P	–	TCL-4SW3 (*1)
			4P	–	TCL-4SW4 (*1)
	Skeleton	TTC	3P	TTC-4SW3-MDU	TTC-4SW3
			4P	TTC-4SW4-MDU	TTC-4SW4
	Rear	BTC	3P	BTC-4SW3 (*1) Only line side	BTC-4SW3 (*4)
			4P	BTC-4SW4 Only line side	BTC-4SW4
Electrical operation device		NFM	3P	–	(*3)
			4P		

Notes *1 For NF400SEP with MDU.
*2 When selecting the MDU breaker mounting, only the MI panel mounting can be manufactured.
*3 Specify the operation method and voltage. Order in combination with the breaker unit.
*4 This is for NF400-SEP with MDU. For rear terminal cover of NF400-HEP with MDU, use PTC-4SW3.

Outline Drawing

Front connection

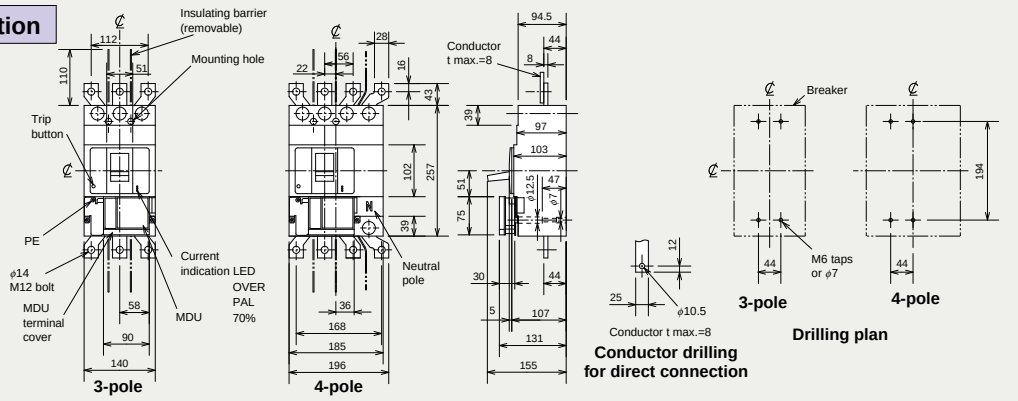

Rear connection

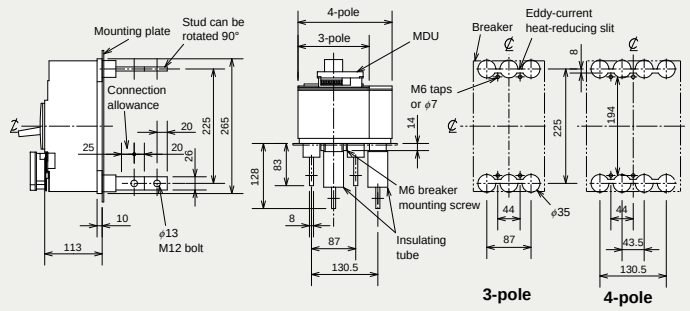

Note The drilling plan is different if insulating barriers are installed.

Front-plate cutout

1mm clearance on each side of handle. (Load side of breaker mounting has given the space to pass wires to the terminal.)

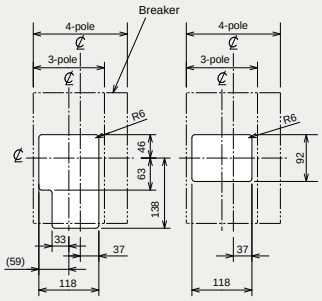

CC-Link ; only MDU panel mounting

NF400-SEP, NF400-HEP with MDU (No transmission, pulse output)

MDU panel mounting

MDU is connected with circuit breaker via MDU connection cable.

Space greater than the value shown in the figure below must be secured, and must be separate 10cm or more from the distribution line.

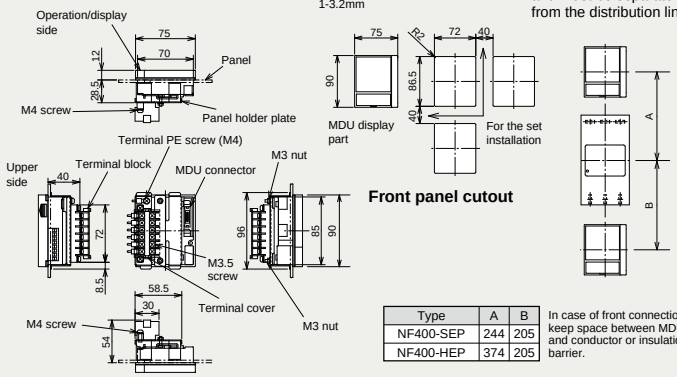

Type	A	B
NF400-SEP	244	205
NF400-HEP	374	205

In case of front connection, keep space between MDU and conductor or insulation barrier.

MDU terminal

Figure of the breaker mounting is removed the terminal cover.

<Panel mounting>

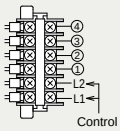

Control power

	①	②	③	④
No transmission	—	—	—	—
Pulse output	—	—	113	114

<Breaker mounting>

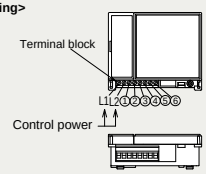

Control power

	①	②	③	④	⑤	⑥
No transmission	—	FG	—	—	—	—
Pulse output	—	FG	—	—	113	114

NF400-SEP, NF400-HEP with MDU (CC-Link)

MDU panel mounting

MDU is connected with circuit breaker via MDU connection cable.

Space greater than the value shown in the figure below must be secured, and must be separate 10cm or more from the distribution line.

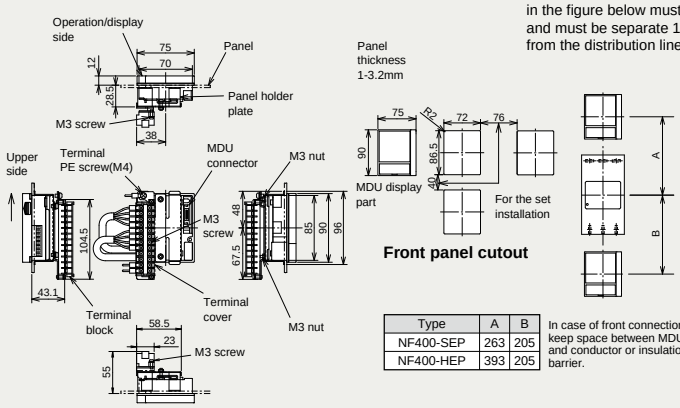

Type	A	B
NF400-SEP	263	205
NF400-HEP	393	205

In case of front connection, keep space between MDU and conductor or insulation barrier.

MDU terminal

Figure of the breaker mounting is removed the terminal cover.

<Panel mounting>

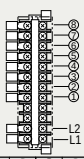

Control power

①	②	③	④
SLD	DG	DB	DA
⑤	⑥	⑦	⑧
SLD	DG	DB	DA

<Breaker mounting>

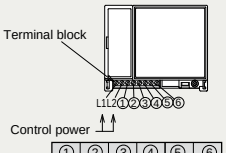

Control power

①	②	③	④	⑤	⑥
—	FG	SLD	DG	DB	DA

NF630-SEP with MDU
NF630-HEP with MDU
NF800-SEP with MDU
NF800-HEP with MDU

NF630-SEP with MDU (Breaker mounting)

Model				NF630-SEP with MDU		NF630-HEP with MDU		NF800-SEP with MDU		NF800-HEP with MDU	
Rated current In (A) Rated ambient temperature 40°C				300 350 400 500 600 630 Adjustable				400 450 500 600 700 800 Adjustable			
Number of poles				3	4	3	4	3	4	3	4
Rated operational voltage Ue V				690		690		690		690	
Rated short-circuit breaking capacity (kA)	IEC 60947-2 (Icu/Ics)	AC	690V	10/10		15/15		10/10		15/15	
			500V	30/30		50/50		30/30		50/50	
			440V	42/42		65/65		42/42		65/65	
			415V	45/45		70/70		45/45		70/70	
			400V	45/45		70/70		45/45		70/70	
			380V	45/45		70/70		45/45		70/70	
			230V	85/85		100/100		85/85		100/100	
			200V	85/85		100/100		85/85		100/100	
Standard attached parts (Front connection) (*1)		Breaker		Mounting screw M6 × 35 (4pcs) Insulation barrier (3P: 2pcs, 4P: 3pcs)							
MDU accessories		Breaker mounting		MDU, Breaker mounting plate, Mounting screw for breaker mounting plate, Connection cable (for breaker mounting), MDU Mounting screw							
		Panel mounting		MDU, Panel mounting bracket, Panel mounting nut, Connection cable (for panel mounting), MDU Mounting screw							

Note *1 4-pole models are provided with auxiliary handle.

Operating Characteristics

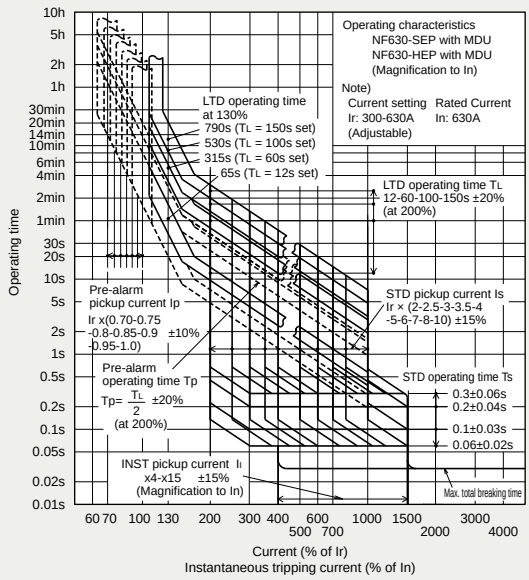

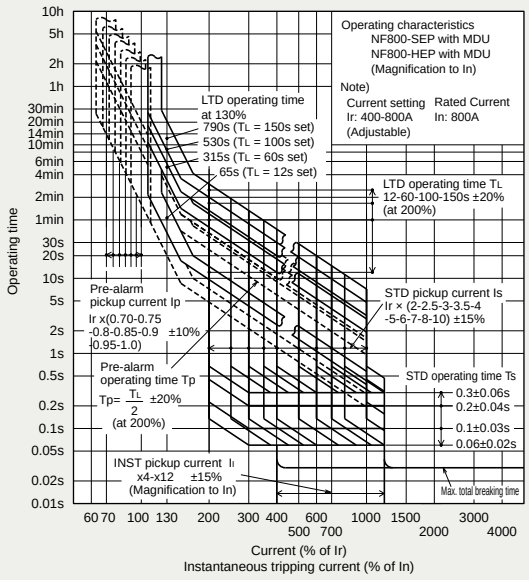

Internal Accessories

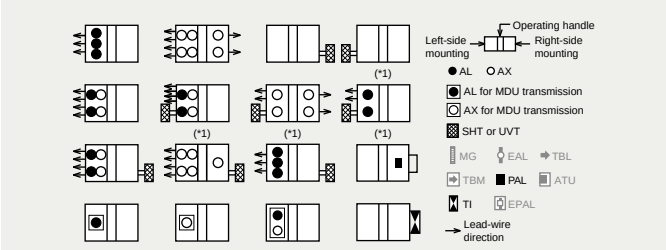

Note *1 Right side mounting is standard of SHT and UVT. Specify separately for left side mounting.

Current Reducing Curve

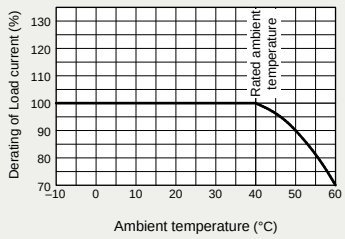

The rated current does not have thermal characteristics. Reduce the current as shown in the curve on the left chart if the ambient temperature exceeds 40°C.

External Accessories

Accessories			Type name	
			Breaker mounting	Panel mounting
Operating handle	F		–	F-8S
	V		–	V-8S
Handle lock device	HL		HL-4SW	HL-4SW
	HL-S		–	HLS-8SW
Mechanical interlock	MI (*1)	3P	MI-8SW3	MI-8SW3
		4P	MI-8SW4	MI-8SW4
Auxiliary handle	HT		HT-4SW	HT-4SW

Notes *1 When selecting the MDU breaker mounting, only the MI panel mounting can be manufactured.
*2 Specify the operation method and voltage. Order in combination with the breaker unit.

Accessories				Type name	
				Breaker mounting	Panel mounting
Terminal cover	Large	TC-L	3P	–	TCL-8SW3
			4P	–	TCL-8SW4
	Skeleton	TTC	3P	TTC-8SW3-MDU	TTC-8SW3
			4P	TTC-8SW4-MDU	TTC-8SW4
	Rear	BTC	3P	BTC-8SW3 Only line side	BTC-8SW3
			4P	BTC-8SW4 Only line side	BTC-8SW4
Electrical operation device		NFM	3P	–	(*2)
			4P		

Outline Drawing

Front connection

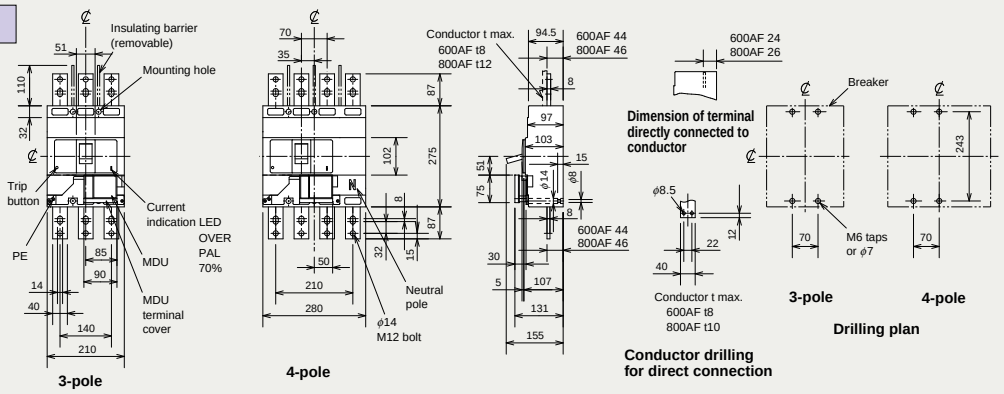

Rear connection

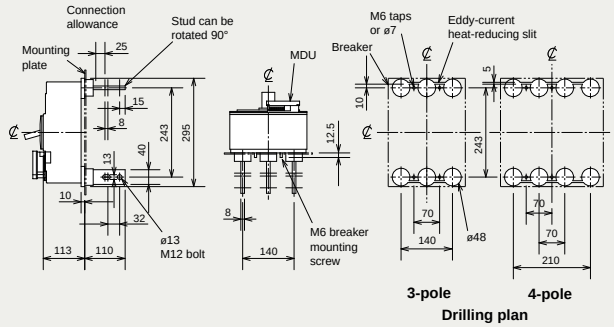

Note The drilling plan is different if insulating barriers are installed.

Front-plate cutout

1mm clearance on each side of handle. (Load side of breaker mounting has given the space to pass wires to the terminal.)

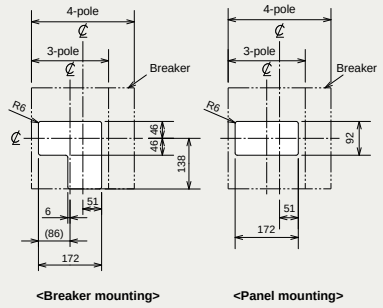

CC-Link ; only MDU panel mounting

NF630-SEP, NF630-HEP, NF800-SEP, NF800-HEP with MDU (No transmission, Pulse output)

MDU panel mounting

MDU is connected with circuit breaker via MDU connection cable.

Space greater than the value shown in the figure below must be secured, and must be separate 10cm or more from the distribution line.

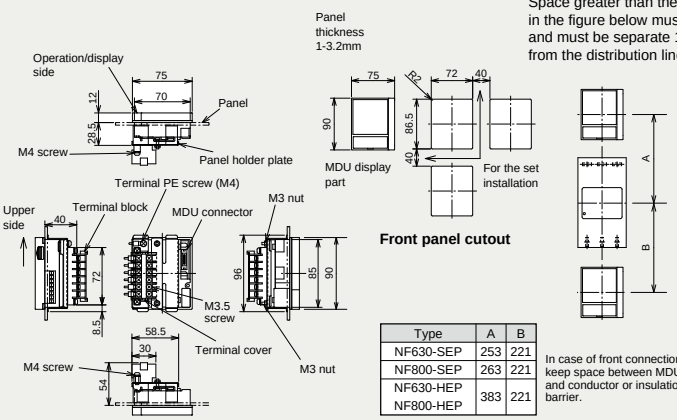

Type	A	B
NF630-SEP	253	221
NF800-SEP	263	221
NF630-HEP NF800-HEP	383	221

In case of front connection, keep space between MDU and conductor or insulation barrier.

MDU terminal

Figure of the breaker mounting is removed the terminal cover.

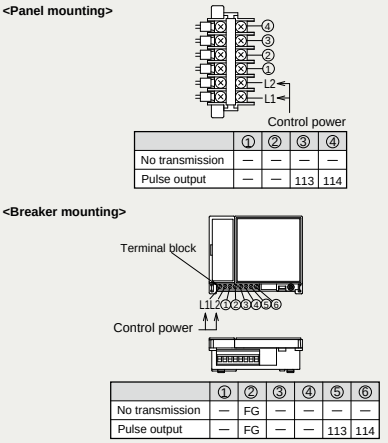

	①	②	③	④
No transmission	—	—	—	—
Pulse output	—	—	113	114

	①	②	③	④	⑤	⑥
No transmission	—	FG	—	—	—	—
Pulse output	—	FG	—	—	113	114

NF630-SEP, NF630-HEP, NF800-SEP, NF800-HEP with MDU (CC-Link)

MDU panel mounting

MDU is connected with circuit breaker via MDU connection cable.

Space greater than the value shown in the figure below must be secured, and must be separate 10cm or more from the distribution line.

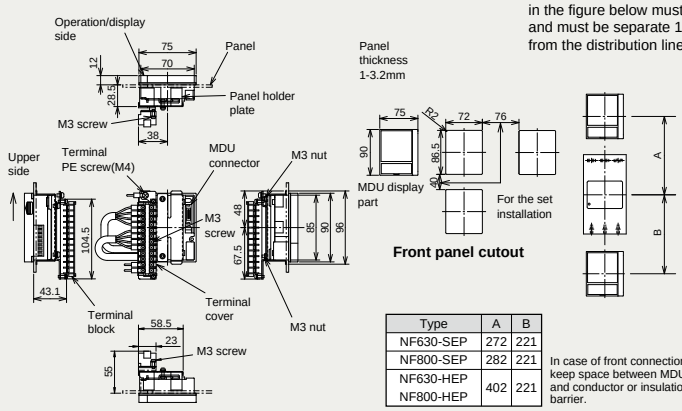

Type	A	B
NF630-SEP	272	221
NF800-SEP	282	221
NF630-HEP NF800-HEP	402	221

In case of front connection, keep space between MDU and conductor or insulation barrier.

MDU terminal

Figure of the breaker mounting is removed the terminal cover.

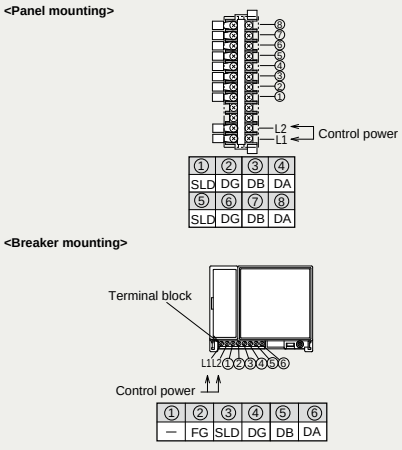

①	②	③	④
SLD	DG	DB	DA
⑤	⑥	⑦	⑧
SLD	DG	DB	DA

①	②	③	④	⑤	⑥
—	FG	SLD	DG	DB	DA

BH
BH-P

BH BH-P

Model			BH			BH-P		
Number of poles			1	2	3	1	2	3
Rated current (A) at ambient temperature 40˚C			70	70, 100	70, 100	70	70, 100	70, 100
Rated voltage (V)		AC	230/400			230/400		
		DC	125			125		
Rated short circuit capacity (kA)	IEC 60898-1	AC230/400V	3	–		3	–	
		AC400V	–	3		–	3	
	–	DC125V	1			1		

Operating Characteristics

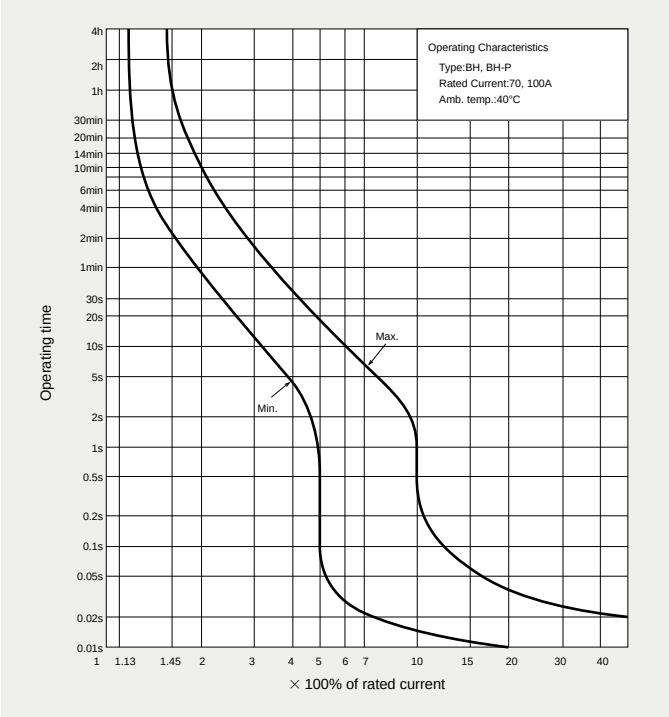

Temperature Compensation Curve

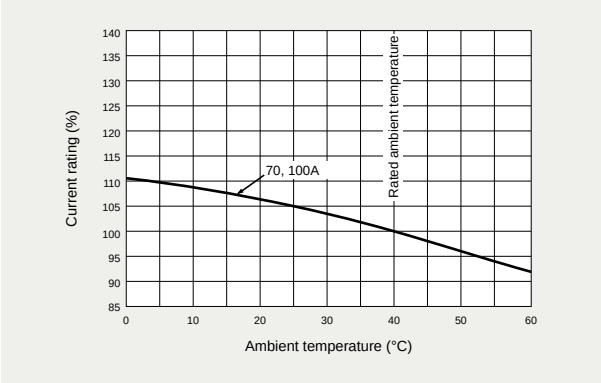

Outline Drawing

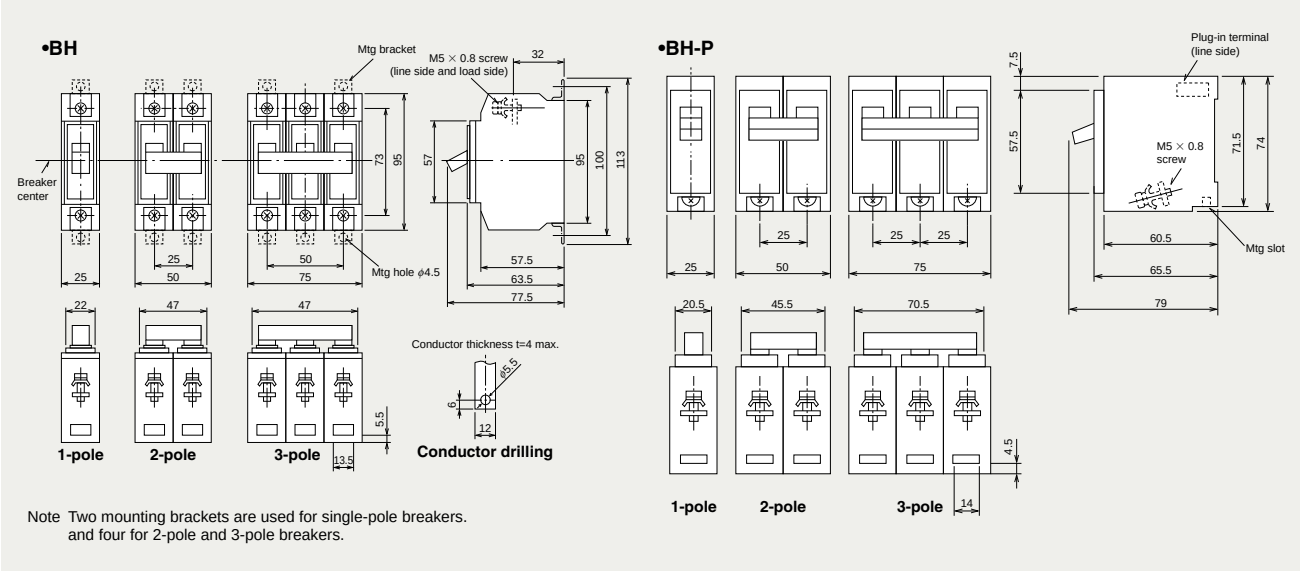

Note Two mounting brackets are used for single-pole breakers.
and four for 2-pole and 3-pole breakers.

BH-D6
BH-D10

BH-D6

Model				BH-D6					BH-D10				BH-D10 (For DC)	
Number of poles (P)				1	2	3	4(3+N) (*1)	2(1+N) (*1)	1	2	3	4(3+N) (*1)	1	2
Instantaneous tripping				Type B, C, D				Type B, C	Type B, C, D				Type B, C	
Rated insulation voltage Ui (V)				440					440				250	
Rated current In (A) at ambient temperature 30°C				0.5, 1, 1.6, 2, 3, 4, 6, 10, 13, 16, 20, 25, 32, 40, 50, 63				0.5, 1, 1.6, 2, 3, 4, 6, 10, 13, 16, 20, 25, 32, 40	0.5, 1, 1.6, 2, 3, 4, 6, 10, 13, 16, 20, 25, 32, 40, 50, 63				0.5, 1, 1.6, 2, 3, 4, 6, 10, 13, 16, 20, 25, 32, 40, 50, 63	
Rated short-circuit capacity (kA)	IEC60898-1 GB10963.1 (Icn)	AC	230V	6	–			6	10	–			6	–
			230/400V	6	–			–	10	–			6	–
			400V	–	6			–	–	10			–	6
	IEC60898-2 GB10963.2 (Icn)	DC	125V	–					–				10	–
			250V	–					–				–	10

Note *1 N pole is a switched neutral pole (without overcurrent release device).

Operating Characteristics

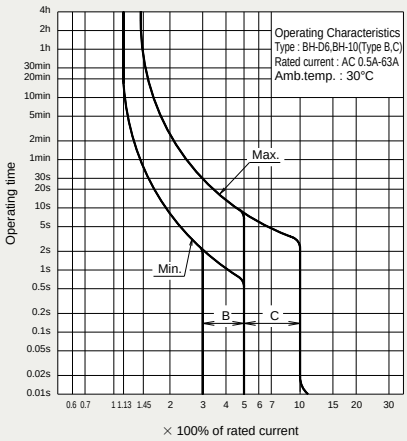

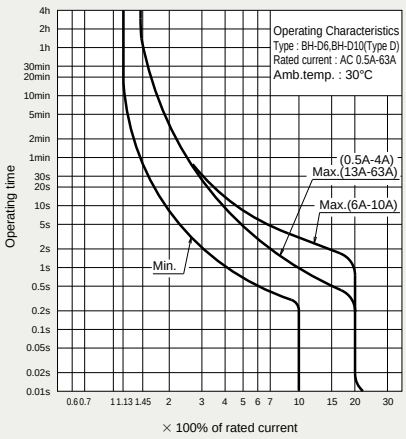

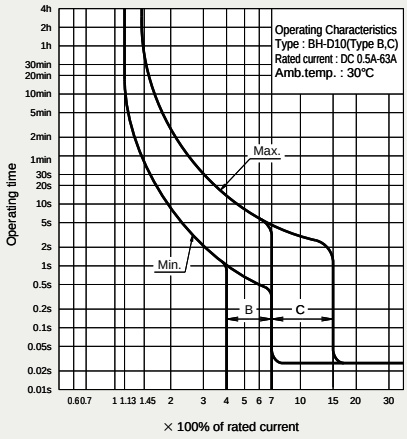

Outline Drawing

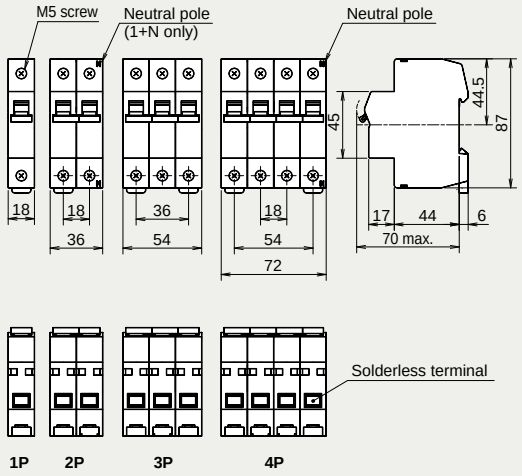

Temperature Compensation Curve

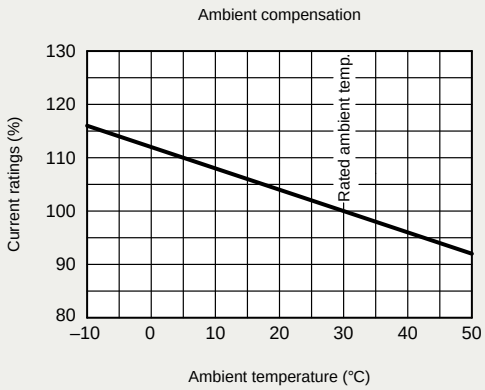

BH-DN

BH-DN

Model				BH-DN
Number of poles (P)				2 (1+N) (*1)
Instantaneous tripping				Type C
Rated insulation voltage Ui (V)				230
Rated current In (A) at ambient temperature 30˚C				6, 10, 16, 20
Rated short-circuit capacity (kA)	IEC60898-1 GB10963.1 (Icn)	AC	230V	4.5

Note *1 N pole is a switched neutral pole (without overcurrent release device).

Operating Characteristics

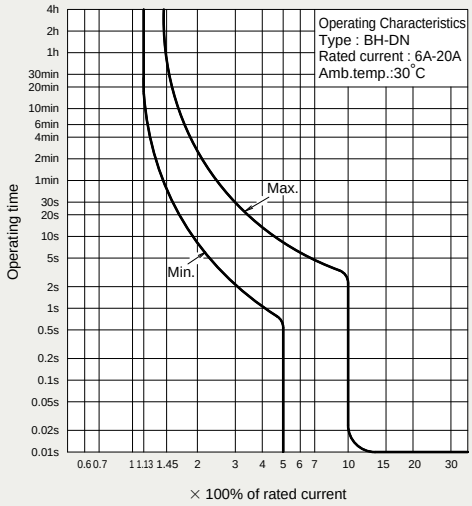

Outline Drawing

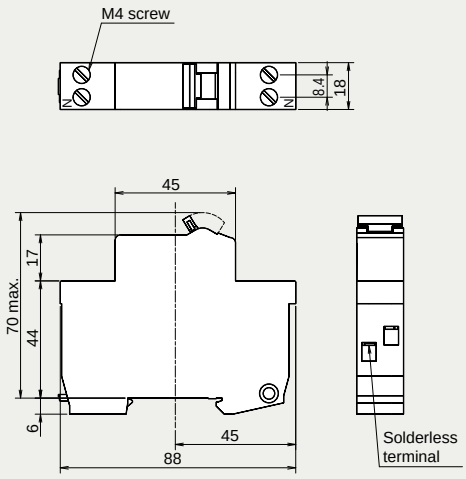

Temperature Compensation Curve